legrand | HPM | NUVO®

CATALOGUE

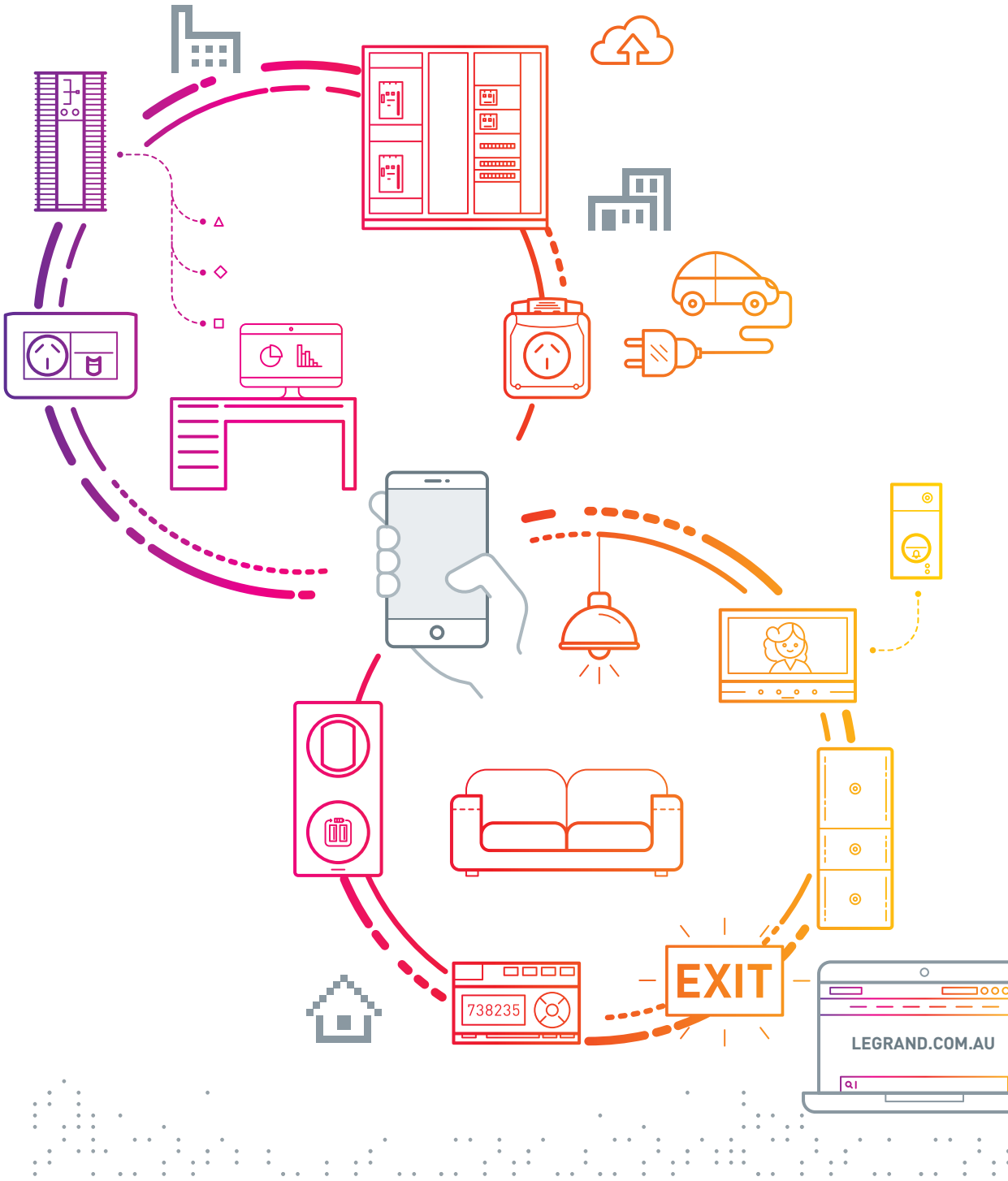

THE **GLOBAL SPECIALIST**
IN ELECTRICAL AND DIGITAL BUILDING INFRASTRUCTURES

2017-2018

legrand®

legrand®

MCBs, RCCBs and RCBOs

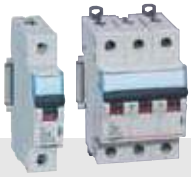

P. 23
TX³ MCBs

P. 24
Isolating Switches

Surge Protectors, Contactors and Time Switches

P. 30
Voltage Surge Protectors

P. 31
CX³ Modular Contactors

Distribution Boards and Enclosures

P. 58
Consumer Units

P. 58
Plexo³ IP65 Enclosures

Industrial Equipment and Accessories

P. 68
Industrial Plugs and Sockets IP66/67, IP44/55

P. 74
Industrial Enclosures

Switches and Powerpoint Series

P. 106
Arteor

P. 120
Archimetal

Switches and Powerpoint Series

P. 211
Como

P. 219
Standard

General Wiring Accessories & Mobile Products

P. 264
Clips and Brackets

P. 265
Wall Boxes

Home Automation and Door Entry

P. 282
Home Automation Kits

P. 284
NUVO™ Multiroom Audio

Ventilation

P. 290
Wall Exhaust Fans

P. 290
Ceiling Exhaust Fans

Lighting and Sensors

P. 300
Fixtures

P. 309
Lamps

Emergency Lighting and Testing Systems

P. 328
Axiom Emergency Lighting System

P. 328
Emergency Testing Systems

Commercial Lighting

P. 358
Indoor LED Luminaires

P. 359
Indoor Batten Luminaires

P. 25 TX³ RCCBs

P. 27 RCBOs

P. 28 Connection Accessories

P. 29 Plug-in MCBs

P. 31 Changeover Switches

P. 26 Compact RCBOs

P. 32 Analogue Time Switches

P. 32 Digital Time Switches

P. 59 Load Centres

P. 61 IP42 Distribution Boards

P. 63 IP55 Distribution Boards

P. 76 Cable Ducting

P. 78 Marking Systems

P. 88 Terminal Blocks

P. 91 Ferrules and Crimping Tools

P. 125 Linea

P. 141 Excel Life

P. 180 Excel

P. 203 Mechanisms

P. 228 Aqua Weatherproof

P. 231 Soliroc Weatherproof

P. 266 Mounting Blocks

P. 268 Junction Boxes

P. 271 Plug Tops and Bases

P. 273 Powerboards and Extension Leads

P. 283 Door Entry System Kits

P. 285 Door Chimes

P. 291 In-Line Exhaust Fan

P. 292 Bathroom Heaters

P. 293 Ceiling Sweep Fans

P. 294 Hand Dryers

P. 320 Lighting Accessories

P. 322 Motion Sensors

P. 322 Photoelectric Smoke Alarm

P. 324 Garden Lighting

P. 329 Emergency Exit Signs

P. 338 LED Satellite Series

P. 337 Emergency Luminaires

P. 344 Power Packs and Batteries

P. 361 Industrial Weatherproof Battens

P. 361 Industrial LED Highbays

P. 365 Outdoor LED Bulkheads

P. 366 Lighting Management

Catalogue number index

Cat. No	Page No	Box/ Carton
1		
1/788BE	222	10/200
1/788P15WE	223	10/200
1/788PWE	222	10/200
1/788WE	222	10/200
1A770CXWE	225	10/200
1A770PLWE	227	20/400
1A770PWE	219	10
1A770WE	219	10
100		
100LCL	271	10/200
100LWE	271	10/200
106/1BL	271	10/200
106/1WE	271	10/200
106/2WE	271	10/200
106/3WE	271	10/200
106/4WE	271	10/200
106/5WE	271	10/200
106/6WE	271	10/200
106/7WE	271	10/200
106/8WE	271	10/200
137/1BL	267	10/160
137/1WE	267	10/160
137BL	267	10/350
137CR	267	10/350
137DBL	267	10/270
137DCHWE	268	10/300
137DCR	267	10/270
137DWE	267	10/270
137H3WE	267	10
137H4WE	267	10
137H5WE	267	10
137H6WE	267	10
137H8WE	267	10
137HS3WE	267	10
137HS4WE	267	10
137HS5WE	267	10
137HS6WE	267	10
137HS8WE	267	10
137V3WE	267	10
137V4WE	267	10
137V5WE	267	10
137V6WE	267	10
137V8WE	267	10
137VS3WE	267	10
137VS4WE	267	10
137VS5WE	267	10
137VS6WE	267	10
137VS8WE	267	10
137WE	267	10/350
138BL	267	10/200
138WE	267	10/200
139BR	266	5
139BWE	266	5
139WE	266	5
140BL	266	10/180
140CHWE	268	10/180
140CR	266	10/180
140WE	266	10/180
141BL	268	10
141WE	268	10
143	218	20/200
143	264	20/200
143/2	218	20/120
143/2	264	20/120
143/2V	218	20/120
143/2V	264	20/120
143U	264	10/120
148WE	266	5
149BL	266	5/90
149CR	266	5/90
149WE	266	5/90
150BL	266	10
150CR	266	10
150WE	266	10
156BL	268	10/200
156WE	268	10/200
170	268	5
192BL	266	5
192WE	266	5
1000		
1000LMWE	206	20/400
1000LWE	220	3/108
1000TMWE	206	20/400
1000TWE	220	3/108
01301	58	10/100
01302	58	10/100
01304	58	10/40
01306	58	5/30
01308	58	5
1310F6	208	10/2000
1310FL	208	10/100
1310FSBL	208	10/400
1310FSCR	208	10/400
1310FSWE	208	10/400
1311S2	209	10/200
1311S4	209	10/200
1312S2	209	10/200
1312S4	209	10/200
01491	60	50
01955	58	8
01961	58	20/200
01966	58	50
01969	58	20
2		
2/770PBE	219	5
2/770PLWE	226	10
2/770PWE	219	5
2/770WE	219	5
2/788PBE	223	10/200
2/788PWE	223	10/200
2WS38	230	40
2WS38P	230	40
2WS38R	230	40
2WS170	228	5/60
2WS170/15	228	5/60
2WS170PP	228	5/60
200		
239BL	268	8/80
239WE	268	8/80
243	264	20/120
246	270	100
247	270	100
248	270	100
250LMBL	206	20/400
250LMCR	206	20/400
250LMWE	206	20/400
250LWE	220	3/108
250TMBL	206	20/400
250TMCR	206	20/400
250TMWE	206	20/400
250TWE	220	3/108
2000		
2000EWE	220	3/108
2400EWE	220	3/108
200000		
201058	328	1
201559	339	1
201559	342	1
201559	359	1
201559	363	1
204008	340	1
204008	359	1
204010	340	1
204010	359	1
204011	340	1
204011	359	1
204012	340	1
204012	359	1
204014	340	1
204014	359	1
204015	340	1
204015	359	1
222023	340	1
222023	342	1
222023	359	1
222023	360	1
222023	363	1
222023	364	1
222024	340	1
222024	342	1
222024	343	1
222024	360	1
222024	364	1
222026	342	1
222026	363	1
222026	364	1
222075	340	1
222075	360	1
222076	340	1
222076	360	1
222077	340	1
222077	360	1
222343	328	1
222423	340	1
222423	359	1
222426	340	1
222426	359	1
222429	340	1
222429	359	1
222432	340	1
222432	359	1
222435	340	1
222435	359	1
222439	340	1
222439	359	1
222442	340	1
222442	360	1
222445	340	1
222445	360	1
222580	340	1
222580	360	1
222581	340	1
222581	360	1
223019	328	1
223185	328	1
226760	340	1
226760	360	1
3		
3G788WE	224	5
3SPKNOBBL	207	10/100
3SPKNOBCR	207	10/100
3SPKNOBWE	207	10/100
30		
33B	272	10/200
33WE	271	10/200
34BCL	272	10/200
35BL	272	10/200
35WE	272	10/200
37/2CL	272	5/50
37/15CL	272	10/100
37B	272	10/200
37BL	271	10/200
37CL	271	10/100
37RCL	271	10/100
38/1WE	272	10
38/2RWE	272	10/200
38/15BL	272	10
38/15WE	272	10
38/20WE	272	10/200
38/25WE	272	10/200
38A0BL	271	10/200
38A0WE	272	10/200
38A1BL	272	10/200
38A1WE	272	10/200
38A3BL	272	10/200
38A3WE	272	10/200
38BL	272	10/200
38RWE	272	10/200
38WE	271	10/200
300		
300FMWE	207	20/160
300FWE	220	3
303/1F	321	10/500
310/10WE	321	10/200
310WE	321	10/200
326	265	10
333BL	321	10/500
333SKWE	321	10/500
333WE	321	10/500
359/10WE	321	10/500
359WE	321	10/500
360/W1WE	320	5/100
360WE	320	10/200
366BR	320	10/200
366LYWE	320	10/200
366SWE	320	10/200
366WE	320	10/200
366YWE	320	10/200
368/1WE	320	10/160
368WE	320	10/160
380	320	40/680
381	320	40/680
388	320	40/680
390	320	40/960
3000		
03705	32	30
03928	30	5/20
03934	30	5/20
03944	30	5/20
30000		
033154	169	10
033155	169	10
033160	169	10
033161	169	10
033180	169	10
033181	169	10
34211	270	10/500
34213	270	10/250
34215	270	10/200
34217	270	10/100
34219	270	10/50
34221	75	10
35007	74	10
35013	74	10
35017	74	10
35022	74	5
35028	74	5
35033	75	2
35043	74	2
35044	75	2
35047	75	1
35054	74	1
35058	74	1
35800	75	20
35801	75	20
35802	75	10
35810	75	5/60
35811	75	5/50
35812	75	5/40
35813	75	5/30
35814	75	5/20
35815	75	5/10
35816	75	5/10
35900	74	10
35901	74	10
35930	74	10
35931	74	10
35940	74	10
35941	74	10
35950	74	5
35951	74	5
35960	74	5
35970	74	2
35971	74	2
35980	74	2
35981	74	2
35990	74	1
35991	74	1
36201	76	56
36213	76	56
37100	88	60/1200
37101	88	50/1000
37102	88	40/800
37103	88	30/600
37104	88	20/180
37105	88	20/180
37107	88	60/660
37108	88	60/600
37160	88	60/1200
37161	88	50/1000
37162	88	40/800
37163	88	30/600
37164	88	20/180
37165	88	20/180
37166	88	10/60
37167	88	60/660
37168	88	60/660
37170	88	60/1200
37171	88	50/1000
37172	88	40/400
37173	88	30/300
37174	88	10/100
37175	88	10/100
37180	89	20/640
37181	89	20/640
37187	89	20/200
37188	89	20/200
37192	89	25/250
37501	90	20/880
37502	90	50/2200
37510	90	50/1000
37511	90	20/500
37512	90	10/250
37513	90	20/500
37540	90	10/100
37542	90	10/100
37546	90	10/1000
37547	90	10/1000
37550	90	100/2000
37551	90	20/800
37552	90	20/800
37556	90	20/600
37560	90	20/800
37562	90	10/400
37568	90	10
37569	90	10
37606	92	20
37608	92	15
37609	92	15
37610	92	15
37639	92	1
37641	92	3000
37642	92	3000
37643	92	3000
37644	92	3000
37645	92	2500
37646	92	200
37647	92	200

Cat. No	Page No	Box/ Carton
37648	92	200
37650	91	20000
37660	91	20000
37661	91	19200
37662	91	19200
37663	91	40000
37664	91	40000
37666	91	40000
37667	91	10000
37668	91	10000
37669	91	4000
37670	91	4000
37671	91	2000
37677	91	2000
37678	91	1200
37687	91	12500
37688	91	12500
37689	91	12500
37690	91	10000
37692	92	1
37697	92	4
37710	86	10000
37712	86	5000
37780	85	30000
37781	85	30000
37782	85	30000
37783	85	30000
37784	85	30000
37785	85	30000
37786	85	30000
37787	85	30000
37788	85	30000
37789	85	30000
37801	85	30000
37802	85	30000
37803	85	30000
37804	85	30000
37805	85	30000
37806	85	30000
37807	85	30000
37808	85	30000
37809	85	30000
37810	85	30000
37826	85	24000
37827	85	24000
37828	85	24000
37829	85	24000
37830	85	24000
37831	85	24000
37832	85	24000
37835	85	24000
37836	85	24000
37837	85	24000
37838	85	24000
37839	86	24000
37840	86	24000
37841	86	24000
37842	86	24000
37843	86	24000
37844	86	24000
37845	86	24000
37846	86	24000
37847	86	24000
37848	86	24000
37849	86	24000
37850	86	24000
37851	86	24000
37910	86	5500
37911	86	5500
37920	86	11000
37921	86	11000
37922	86	5500
37930	86	10000
37931	86	10000

Cat. No	Page No	Box/ Carton
37932	86	1
37933	87	5000
37934	87	2000
37935	87	1000
37936	87	10000
37937	87	10000
37938	87	5000
37940	87	5000
37941	87	5000
37942	87	2000
37943	87	2000
37944	87	200
37954	86	24000
37955	86	24000
37956	86	24000
37957	86	24000
37958	86	24000
37959	86	24000
37960	86	24000
37989	87	10/500
37990	87	10/500
37991	87	10
37992	87	10/500
37993	87	10/500
37994	87	1
38100	78	50000
38101	78	50000
38102	78	50000
38103	78	50000
38104	78	50000
38105	78	50000
38106	78	50000
38107	78	50000
38108	78	50000
38109	78	50000
38110	78	30000
38111	78	30000
38112	78	30000
38113	78	30000
38114	78	30000
38115	78	30000
38116	78	30000
38117	78	30000
38118	78	30000
38119	78	30000
38120	78	30000
38121	78	30000
38122	78	30000
38123	78	30000
38124	78	30000
38125	78	30000
38126	78	30000
38127	78	30000
38128	78	30000
38129	78	30000
38130	78	30000
38131	79	30000
38132	79	30000
38133	79	30000
38134	79	30000
38135	79	30000
38140	79	30000
38141	79	30000
38142	79	30000
38143	79	30000
38144	79	30000
38145	79	30000
38146	79	30000
38201	84	8
38202	84	8
38203	84	8
38204	84	8
38210	79	60000
38211	79	60000

Cat. No	Page No	Box/ Carton
38212	79	60000
38213	79	60000
38214	79	60000
38215	79	60000
38216	79	60000
38217	79	60000
38218	79	60000
38219	79	60000
38220	81	60000
38221	81	60000
38222	81	60000
38223	81	60000
38224	81	60000
38225	81	60000
38226	81	60000
38227	81	60000
38228	81	60000
38229	81	60000
38230	82	40000
38231	82	40000
38232	82	40000
38233	82	40000
38234	82	40000
38235	82	40000
38236	82	40000
38237	82	40000
38238	82	40000
38239	82	40000
38270	80	30000
38271	80	30000
38272	80	30000
38273	80	30000
38274	80	30000
38275	80	30000
38276	80	30000
38280	82	30000
38281	82	30000
38282	82	30000
38283	82	30000
38284	82	30000
38285	82	30000
38286	82	30000
38290	83	30000
38291	83	30000
38292	83	30000
38293	83	30000
38294	83	30000
38295	83	30000
38296	83	30000
38300	79	30000
38301	79	30000
38302	79	30000
38303	79	30000
38304	79	30000
38305	80	30000
38306	80	30000
38307	80	30000
38308	80	30000
38309	80	30000
38310	80	30000
38311	80	30000
38312	80	30000
38313	80	30000
38314	80	30000
38315	80	30000
38316	80	30000
38317	80	30000
38318	80	30000
38319	80	30000
38320	80	30000
38321	80	30000
38322	80	30000
38323	80	30000
38324	80	30000

Cat. No	Page No	Box/ Carton
38325	80	30000
38330	81	30000
38331	81	30000
38332	81	30000
38333	81	30000
38334	81	30000
38335	81	30000
38336	81	30000
38337	81	30000
38338	81	30000
38339	81	30000
38340	81	30000
38341	81	30000
38342	81	30000
38343	81	30000
38344	81	30000
38345	81	30000
38346	81	30000
38347	81	30000
38348	81	30000
38349	81	30000
38350	81	30000
38351	81	30000
38352	82	30000
38353	82	30000
38354	82	30000
38355	82	30000
38360	82	30000
38361	82	30000
38362	82	30000
38363	82	30000
38364	82	30000
38365	82	30000
38366	83	30000
38367	83	30000
38368	83	30000
38369	83	30000
38370	83	30000
38371	83	30000
38372	83	30000
38373	83	30000
38374	83	30000
38375	83	30000
38376	83	30000
38377	83	30000
38378	83	30000
38379	83	30000
38380	83	30000
38381	83	30000
38382	83	30000
38383	83	30000
38384	83	30000
38385	83	30000
38392	84	100/1000
38394	84	10/500
38395	84	10/500
38396	84	10/500
38397	84	10/500
38490	84	2400
38491	84	1200
38492	84	500
300000		
344642	283	1
344643	283	1
363911	283	1
369083	283	6
369088	283	8
369200	283	6
369205	283	8
369210	283	6
369215	283	8

Cat. No	Page No	Box/ Carton
40		
42/120	228	24
42/120MT	228	24
42/220	228	24
42/220MT	228	24
42/235	228	24
42/235MT	228	24
42/320	228	24
42/320MT	228	24
42/335	228	24
42/355	228	24
42/355MT	228	24
400		
400A2PMWE	207	20/200
400LMBL	206	20/400
400LMWE	206	20/400
400LWE	220	3/108
400TMBL	206	20/400
400TMCR	206	20/400
400TMWE	206	20/400
400TWE	220	3/108
401	270	100/4500
401/1	270	32
401J	270	32
401L	270	100/4500
402	270	50/2500
402/1	270	32
404	268	10/200
405	268	10/140
406	268	10/140
413	268	10/450
413LA	268	10/450
413S	268	10/450
429/2	265	4/56
429R	218	10/140
429R	265	10/140
435	218	60
435	265	60
435/2	265	60
450SMWE	207	20/200
475/2	220	3
475/2M	207	10
488TRI3W	322	20
488TRI3W	366	20
4000		
04770	32	12/120
40000		
48804	367	1
48806	366	10
48807	366	10
48817	366	1
48875	367	4/112
48916	366	1
48932	366	1
48933	366	1
048941	366	10
048942	366	10
48971	367	4/112
49754	32	30
49983	32	30
400000		
403430	23	10/100
403432	23	10/100

Cat. No	Page No	Box/ Carton
403434	22, 23	10/100
403435	23	10/100
403436	22	10/100
403436	23	10/100
403436	34	10/100
403437	23	10/100
403438	23	10/100
403439	22	10/100
403439	23	10/100
403439	34	10/100
403440	23	10/100
403524	23	5/50
403526	23	5/50
403528	23	5/50
403529	23	5/50
403530	23	5/50
403531	23	5/50
403532	23	5/50
403533	23	5/50
403534	23	5/50
403541	23	20
403543	23	20
403545	23	20
403546	23	20
403547	23	20
403548	23	20
403549	23	20
403550	23	20
403551	23	20
404905	28	20/400
404906	28	20/400
404911	28	20/200
404912	28	10
404914	28	10
404917	28	5/50
404926	28	20/200
404937	28	10
404938	28	50
404939	28	10
404940	28	3/30
404941	28	10
404942	28	40
404943	28	10
404944	28	30
404945	28	10
404988	28	20/200
404989	28	40/2000
404990	28	20/840
406412	24	10/100
406423	24	10/100
406432	24	10/100
406441	24	5/50
406449	24	5/50
406450	24	5/50
406461	24	36
406469	24	36
406470	24	36
410999	27	24
411000	27	24
411002	27	24
411003	27	24
411004	27	24
411005	27	24
411006	27	24
411047	27	24
411048	27	24
411050	27	24
411051	27	24
411052	27	24
411053	27	24
411054	27	24
411121	26	1
411122	26	1
411124	26	1

Cat. No	Page No	Box/ Carton
411125	26	1
411126	26	1
411127	26	1
411128	26	1
411129	26	1
411131	26	1
411132	26	1
411133	26	1
411134	26	1
411185	27	12
411186	27	12
411187	27	12
411188	27	12
411189	27	12
411190	27	12
411191	27	12
411192	27	12
411233	27	12
411234	27	12
411235	27	12
411236	27	12
411237	27	12
411509	25	24
411510	25	24
411511	25	24
411512	25	24
411559	25	24
411560	25	24
411561	25	24
411562	25	24
411707	25	12
411708	25	12
411709	25	12
411710	25	12
411764	25	12
411765	25	12
411766	25	12
411767	25	12
412220	30	24
412224	30	20
412225	30	15
412230	30	24
412232	30	20
412233	30	15
412270	30	24
412272	30	20
412274	30	20
412275	30	15
412297	30	24
412301	30	24
412303	30	24
412398	30	24
412516	31	24
412521	31	4/48
412523	31	24
412524	31	42
412527	31	24
412533	31	24
412535	31	24
412536	31	1
412536	328	1
412544	31	24
412545	31	24
412547	31	24
412548	31	42
412549	31	20
412550	31	20
412551	31	24
412553	31	24
412556	31	24
412557	31	24
412558	31	24
412561	31	24
412630	32	30
412631	32	30

Cat. No	Page No	Box/ Carton
412641	32	30
412654	32	30
412657	32	30
412780	32	100
412790	32	100
412794	32	100
412795	32	30
412812	32	30
412813	32	30
412872	32	10/100
412900	31	10/100
412902	31	10/100
412903	31	5/50
50000		
51106	70	10
51110	70	10
51111	70	10
51126	72	5/50
51130	72	12
51131	72	12
51146	72	30
51150	72	12
51151	72	12
51161	70	5/20
51176	72	20
51180	72	12
51181	72	10
51190	70	10
51191	70	10
52042	71	5/50
52082	73	5/50
52203	73	10
52229	73	5/50
52243	71	5/50
52244	71	5/50
52283	73	5/50
52284	73	20
52702	73	6
52742	71	20
52762	71	10
52782	73	10
52919	73	12
52920	73	12
52936	69	10
52940	73	10
52943	71	5/15
52944	71	15/20
52946	69	10
52949	73	10
52983	73	10
52984	73	12
52986	69	10
53006	70	10
53010	70	10
53011	70	10
53046	72	12
53050	72	12
53051	73	12
53056	70	10
53060	70	10
53061	70	10
53076	72	10
53080	72	10
53081	72	10
53086	70	10
53090	70	10
53091	70	10
59260	69	1
59261	69	1
59262	69	1
59263	69	1
59264	69	1

Cat. No	Page No	Box/ Carton
59265	69	1
59266	69	1
59267	69	1
59326	72	10
59327	72	10
59336	73	1
59337	73	1
59346	70	5
59347	70	5
59376	70	6
59386	72	5
59387	72	5
59427	72	10
59428	72	10
59437	73	1
59438	73	1
59447	70	5
59448	70	5
59477	70	6
59478	70	6
59487	72	5
59488	72	5
59651	68	1
59652	68	1
59653	68	1
59655	68	1
59657	68	1
59658	68	1
59659	68	1
59661	68	1
59662	68	1
59663	68	1
59665	68	1
59667	68	1
59668	68	1
59669	68	1
59670	68	1
59681	68	1
59695	69	1
500000		
571907	115	10/100
571910	119	10/60
571917	113	10/100
571919	113	10/100
571920	119	10/60
571927	113	10/100
571929	113	10/100
571957	115	10/100
571967	113	10/100
571969	113	10/100
571977	113	10/100
571979	113	10/100
572000	113	10/100
572001	113	10/100
572002	113	10/100
572003	113	10/100
572010	113	10/100
572011	113	10/100
572015	113	10/100
572016	113	10/100
572030	114	10/100
572031	114	10/100
572032	114	10/100
572033	114	10/100
572042	113	10/100
572044	113	10/100
572047	113	10/100
572048	113	10/100
572051	117	10/100
572051	216	10/100
572052	216	10/100
572053	117	10/100

Cat. No	Page No	Box/ Carton
572053	216	10/100
572055	117	10/100
572055	216	10/100
572056	114	10/100
572163	115	10/100
572171	115	10/100
572204	117	10/100
572204	217	10/100
572207	117	10/100
572207	217	10/100
572221	117	20
572221	216	20
572222	117	10/100
572222	217	10/100
572223	117	10/100
572223	216	10/100
572224	117	10/100
572225	117	10/100
572226	117	20
572226	216	20
572239	114	10/100
572281	116	10/100
572300	115	10/100
572302	115	10/100
572303	115	10/100
572306	115	10/100
572312	115	10/100
572313	115	10/100
572314	115	10/100
572315	115	10/100
572330	116	10/100
572331	116	10/100
572335	115	10/100
572341	114	10/100
572342	114	10/100
572343	114	10/100
572349	115	10/100
572363	117	10/100
572363	217	10/100
572452	117	10/100
572452	217	10/100
572453	117	10/100
572453	217	10/100
572500	113	10/100
572501	113	10/100
572502	113	10/100
572503	113	10/100
572510	113	10/100
572511	113	5/100
572515	113	10/100
572516	113	10/100
572530	114	10/100
572531	114	10/100
572532	114	10/100
572533	114	10/100
572542	113	5/100
572544	113	10/100
572547	113	10/100
572548	113	10/100
572556	114	10/100
572663	115	10/100
572671	115	10/100
572724	117	10/100
572726	117	20
572726	216	20
572739	114	10/100
572800	115	10/100
572802	115	10/100
572803	115	10/100
572806	115	10/100
572812	115	10/100
572813	115	10/100
572814	115	10/100
572815	115	10/100

Cat. No	Page No	Box/ Carton
572830	116	10/100
572831	116	10/100
572835	115	10/100
572841	114	10/100
572842	114	10/100
572843	114	10/100
572849	115	10/100
573204	284	1
573704	284	1
573982	284	1
574061	117	20
574061	216	20
574062	216	20
574082	117	20
574082	216	20
575010	118	10/120
575011	118	5/50
575012	118	5/50
575230	118	10/120
575231	118	10/120
575232	118	10/120
575250	118	10/120
575251	118	10/120
575252	118	10/120
575253	118	40
575254	118	40
575255	119	40
575256	119	40
575273	118	40
575274	118	40
575275	119	40
575276	119	40
575410	119	10/120
575411	119	10/120
575412	119	10/120
575430	112	5/50
575431	112	5/50
575432	112	5/50
575433	112	40
575434	112	40
575435	112	40
575436	112	40
576430	119	40
576431	118	40
576432	118	40
576433	119	40
576434	119	40
576435	118	40
576436	118	40
576437	119	40
576438	118	40
576439	119	40
576450	119	40
576451	118	40
576452	118	40
576453	119	40
576454	119	40
576455	118	40
576456	118	40
576457	119	40
576458	118	40
576459	119	40
576470	112	40
576471	112	40
576472	112	40
576473	112	40
576474	112	40
576475	112	40
576476	112	40
576477	112	40
576478	112	5/50
576479	112	40

Cat. No	Page No	Box/ Carton
60		
65WE	219	10
600		
600NWE	219	10/160
600WE	219	10/160
600XWE	219	10/160
601WE	219	10/160
601XWE	219	10/160
616	365	18
630/3	322	40
630/3A	322	5/40
630/5	322	60
630/9-2W	322	20
630/9-3W	322	20
630R01WE	322	1
630R02WE	322	1
630S01BL	322	1
630S01WE	322	1
630S02WE	322	1
630SM01BL	322	1
630SM01WE	322	1
650ET1WE	220	3
650ETWE	220	3
60000		
067303	284	1
067322	284	1
69795	231	10
600000		
601206	60	10
601207	60	8
601208	60	4
601209	60	1
601974	58	6
601976	58	6
601978	58	6
601981	58	1
601982	58	1
601983	58	1
602780	26	1
602782	26	1
602783	26	1
602784	26	1
602785	26	1
602786	26	1
603770	32	30
603771	32	30
606410	26	15
606411	26	15
606412	26	15
606413	26	15
606414	26	15
606415	26	15
636095	76	32
636096	76	40
636100	76	60
636101	76	56
636102	76	56
636103	76	40
636105	76	56
636106	76	48
636107	76	48
636108	76	20
636109	76	24
636111	76	32
636112	76	32

Cat. No	Page No	Box/ Carton
636113	76	32
636114	76	24
636115	76	24
636116	76	24
636117	76	24
636118	76	20
636119	76	24
636120	76	24
636121	76	16
636122	76	16
636123	76	12
636124	76	16
636125	76	16
636177	77	250
636178	77	250
636206	77	48
636207	77	48
636212	77	32
643085	322	6/24
643086	322	15
649914	32	10
649917	32	10
664050	344	1
664051	344	1
664053	344	1
664054	344	1
664055	344	1
664160	365	1
664161	365	1
664162	365	1
664164	343	1
664164	365	1
664164/D	343	1
664164/D	365	1
664165	343	1
664165	365	1
664165/D	343	1
664165/D	365	1
664168	343	1
664168	365	1
664169	343	1
664169	365	1
664172	365	1
664173	365	1
664174	365	1
682055	339	1
682056	339	1
682059	344	1
682083	328	1
682084	328	1
682085	328	1
682086	328	1
682142	343	1
682142	360	1
682206	331	1
682213	344	1
682215	344	1
682216	344	1
682217	344	1
682218	344	1
682243	340	1
682243	360	1
682244	343,	1
682244	360	1
682251	344	1
682261	340	1
682261	360	1
682263	340	1
682263	360	1
682265	340	1
682265	360	1
682267	340	1
682267	360	1
682268	340	1
682268	360	1

Cat. No	Page No	Box/ Carton
682298	328	1
682299	328	1
682369	339	1
682370	328	1
682371	328	1
682372	328	1
682373	328	1
682374	328	1
682375	328	1
682376	328	1
682377	328	1
682400	358	1
682400D	358	1
682401	358	1
682401D	358	1
682402	358	1
682402D	358	1
682403	358	1
682403D	358	1
682420	358	1
682421	358	1
682422	358	1
682423	358	1
682424	358	1
682425	358	1
682426	358	1
682427	358	1
682450	358	1
682450D	358	1
684400	331	1
684401	331	1
684402	331	1
684408	331	1
684409	331	1
684420B	331	1
684422B	331	1
684424	360	1
684431	329	1
684432	329	1
684433	329	1
684434	329	1
684435	329	1
684436	329	1
684437	329	1
684438	329	1
684439	329	1
684440	329	1
684441	329	1
684443	329	1
684444	329	1
684447	334	6
684449	334	4
684481	334	1
684481/D	334	1
684482	334	1
684482/D	334	1
684483	334	1
684483/D	334	1
684484	334	1
684484/D	334	1
684485	334	1
684485/D	334	1
684486	335	1
684486/D	335	1
684487	335	1
684487/D	335	1
684488	335	1
684488/D	335	1
684489	335	1
684489/D	335	1
684490	335	1
684490/D	335	1
684491	334	1
684492	334	1
684493	334	1

Cat. No	Page No	Box/ Carton
684494	334	1
684495	334	1
684496	335	1
684497	335	1
684498	335	1
684499	335	1
684500	335	1
684501	335	1
684502	335	1
684503	335	1
684504	335	1
684505	335	1
684506	335	1
684507	335	1
684508	335	1
684509	335	1
684511	335	1
684512	335	1
684513	335	1
684514	335	1
684515	335	1
684650	336	1
684650/D	336	1
684651	336	1
684651/D	336	1
684652	336	1
684652/D	336	1
684659	336	1
684660	336	1
684661	336	1
684662	336	1
684669	336	1
684670	336	1
684670/D	336	1
684671	336	1
684671/D	336	1
684672	336	1
684672/D	336	1
684680	336	1
684681	336	1
684682	336	1
684689	336	1
684690	336	1
684691	336	1
684692	336	1
684700	361	1
684730	330	1
684730/D	330	1
684731	330	1
684731/D	330	1
684733	330	1
684733/D	330	1
684737	330	1
684740	330	1
684741	330	1
684742	330	1
684743	330	1
684770	332	1
684770/D	332	1
684771	332	1
684771/D	332	1
684772	332	1
684772/D	332	1
684773	332	1
684773/D	332	1
684774	332	1
684774/D	332	1
684775	332	1
684775/D	333	1
684776	332	1
684776/D	333	1
684777	332	1
684777/D	333	1
684778	332	1
684778/D	333	1

Cat. No	Page No	Box/ Carton
684779	332	1
684779/D	333	1
684780	332	1
684781	332	1
684782	332	1
684783	332	1
684784	332	1
684785	332	1
684786	332	1
684787	332	1
684788	332	1
684789	332	1
684850	338	10
684850/D	338	10
684852	338	10
684852/D	338	10
684853	338	1
684853/D	338	1
684854	338	1
684854/D	338	1
684855	338	10
684860	338	10
684862	338	10
684863	338	1
684864	338	1
684874	335	1
684874	338	1
684875	338	1
684875/D	338	1
684878	338	1
684879	338	1
684880	338	1
684929	362	1
684930	362	1
684931	362	1
684932	362	1
684933	362	1
684934	362	1
684937	342	1
684937	363	1
684938	342	1
684938	363	1
684939	342	1
684939	363	1
684940	342	1
684940	363	1
684941	342	1
684941	363	1
684942	363	1
684945	342	1
684945	363	1
684946	342	1
684946	363	1
684947	342	1
684947	363	1
684948	342	1
684948	363	1
684949	342	1
684949	363	1
684954	339	1
684954	359	1
684956	339	1
684956	359	1
684964	339	1
684964	359	1
684966	339	1
684966	359	1
684971	359	1
684973	359	1
684984	359	1
684986	339	1
684986	359	1
684987	359	1
684990	359	1
684994	359	1

Cat. No	Page No	Box/ Carton
684996	339	1
684996	359	1
685000	342	1
685000	363	1
685010	363	1
685011	363	1
685012	363	1
685013	363	1
685014	363	1
685015	363	1
685016	342	1
685016	363	1
685018	342	1
685018	363	1
685019	342	1
685019	363	1
685020	342	1
685020	363	1
685021	342	1
685021	363	1
685023	342	1
685023	364	1
685024	342	1
685024	364	1
685025	342	1
685025	364	1
685026	342	1
685026	364	1
685027	342	1
685027	364	1
685030	337	1
685031	337	1
685032	337	1
685033	337	1
685034	337	1
685035	337	1
685036	337	1
685037	337	1
685040	361	1
685041	361	1
685042	361	1
685043	361	1
685050	341	1
685050	361	1
685050/D	341	1
685050/D	362	1
685051	341	1
685051	361	1
685053	341	1
685053	361	1
685060	341	1
685060	361	1
685061	341	1
685061	361	1
685063	341	1
685063	361	1
685070	361	1
685071	361	1
685072	361	1
685073	361	1
685080	341	1
685080	361	1
685080/D	341	1
685080/D	362	1
685081	341	1
685081	361	1
685083	341	1
685083	361	1
685090	341	1
685090	361	1
685091	341	1
685091	361	1
685093	341	1
685093	361	1
686200	333	5

Cat. No	Page No	Box/ Carton
686200/D	333	1
686203	333	5
686206	333	5
686206/D	333	1
686207	333	5
686208	333	5
686208/D	333	1
686211	333	5
686214	330	1
686214	333	1
686215	333	1
686216	330	1
686216	333	1
686235	330	1
686235	333	1
686236	330	1
686236	333	1
686240	329	1
686240	330	1
686240	331	1
686240	334	1
686244	341	1
686244	362	1
686260	330	1
686260	333	1
686261	330	1
686261	333	1
686262	330	1
686262	333	1
686263	330	1
686263	333	1
686264	330	1
686264	333	1
686265	330	1
686265	333	1
686266	337	1
686267	337	1
686268	337	1
686269	337	1

700

700CCWE	221	10
700LMWE	206	20/400
700LWE	220	3/108
700TMWE	206	20/400
700TWE	220	3/108
707MAM	204	10/120
707MRED	204	10/120
707SM24VGR	204	10/120
711	264	50/600
712	218	50/600
712	264	50/600
716	264	20/240
717/1	124	1
717/1	200	1
717/1	264	1
718/8	264	20/120
718/13	264	20/240
719	264	10
719/1	264	1
738KL15WE	223	10/200
738KL20WE	223	10/200
738KLN15WE	223	10/200
738KLNWE	223	10/200
738KLWE	223	10/200
749	265	10
749S	265	1
751	265	20/320
768PMWE	204	10/120
769MBL	204	10/120
769MCR	204	10/120
769MWE	204	10/120
769P15MBL	204	10/120

Cat. No	Page No	Box/ Carton
769P15MWE	204	10/120
769P20MBL	204	10/120
769P20MWE	204	10/120
769PMBL	204	10/120
769PMCR	204	10/120
769PMWE	204	10/120
770/0BL	227	20/200
770/0WE	227	20/200
770/1CXWE	225	10/200
770/1D1PLWE	227	20
770/1D3PLWE	227	20
770/1FCXWE	225	10/200
770/1KLIOWE	221	10
770/1KLIWE	221	10
770/1KLOWE	221	10
770/1PLBL	226	20/400
770/1PLCR	226	20/400
770/1PLWE	226	20/400
770/1RJ2WE	225	10/200
770/1WE	219	10/200
770/2D3PLWE	227	20
770/2PLBL	226	20/400
770/2PLCR	226	20/400
770/2PLWE	226	20/400
770/2RJ2WE	225	10/200
770/2WE	219	10/200
770/3PLBL	226	20/400
770/3PLWE	226	20/400
770/3WE	219	10/200
770/4PLBL	226	20/400
770/4PLCR	226	20/400
770/4PLWE	226	20/400
770/4WE	219	10/200
770/5PLCR	226	20/400
770/5PLWE	226	20/400
770/6PLBL	226	20/400
770/6PLCR	226	20/400
770/6PLWE	226	20/400
770/15MBL	203	10/120
770/15MCR	203	10/120
770/15MWE	203	10/120
770/20KTM	206	10/120
770/20MBL	203	10/120
770/20MCR	203	10/120
770/20MWE	203	10/120
770/35MBL	203	10/120
770/35MCR	203	10/120
770/35MENGWE	203	10/120
770/35MHOBWE	203	10/120
770/35MH/PLATEW	203	10/120
770/35MOVENWE	203	10/120
770/35MRANGEWE	203	10/120
770/35MSTOVEWE	203	10/120
770/35MWE	203	10/120
770/202KTM	206	10/120
770/202MBL	203	10/120
770/202MWE	203	10/120
770CXMBL	208	10
770CXMCR	208	10
770CXMWE	208	10
770DMBL	203	10/120
770DMCR	203	10/120
770DMHEAT/HWE	203	10/120
770DMWE	203	10/120
770IMBL	204	10/120
770IMCR	204	10/120
770IMWE	204	10/120
770KLIMWE	206	10
770KLIOMWE	206	10
770KLIOWECK	221	10
770KLOMWE	206	10
770KT1	221	10
770KT2	221	10
770KT3	221	10
770KT4	221	10

Cat. No	Page No	Box/ Carton
770KT5	221	10
770KT8	221	10
770KT13	221	10
770KT14	221	10
770KT16	221	10
770L12CXWE	208	10
770L16CXWE	208	10
770LL15MWE	204	10/120
770LL20MWE	204	10/120
770LLMBL	204	10/120
770LLMCR	204	10/120
770LLMWE	204	10/120
770MBL	203	10/120
770MCR	203	10/120
770MFANWE	203	10/120
770MHEATWE	203	10/120
770MLIGHTWE	203	10/120
770MPRINTWE	203	10/120
770MWE	203	10/120
770REL1	219	3/108
770REL8	219	3
770RMBL	204	10/120
770RMCR	204	10/120
770RMWE	204	10/120
770RS180MWE	206	10/120
770RS270MWE	206	10/120
770RS360MWE	206	10/120
770T3	221	10
770USB1CMWE	208	12
770USB2ACMWE	208	12
770USB2PSAMBL	208	12
770USB2PSAMWE	208	12
770USB2PSXMBL	208	12
770USB2PSXMWE	208	12
770XMBL	205	10/120
770XMWE	205	10/120
777/15SWE	224	10/200
777/15WE	224	10/200
777/1015WE	224	10/200
777BL	223	10/200
777CHWE	223	10/200
777CR	223	10/200
777EL10	224	2/100
777EL10/1015	224	2/100
777EL10ES	224	2/100
777EL10N	224	2/100
777EL10N3	224	2/100
777EL30	224	2/100
777EL30/1015	224	2/100
777EL30ES	224	2/100
777EL30G	224	2/100
777EL30G1015	224	2/100
777EL30M	224	2/100
777IDCL	224	10/100
777NSRED	223	10/200
777NSWE	223	10/200
777P15WE	224	10/200
777PLKWE	223	10/200
777PWE	223	10/200
777SWE	223	10/200
777WE	223	10/200
777XSWE	223	10/200
777XWE	223	10/200
787/2XWE	222	10/200
787/15BL	222	10/200
787/15NSWE	222	10/200
787/15SWE	222	10/200
787/15WE	222	10/200
787/20WE	223	10/200
787/25WE	223	10/200
787/32WE	223	10/200
787BL	222	10/200
787DIN	29	10/200
787DIN15	29	10
787NSWE	222	10/200

Cat. No	Page No	Box/ Carton
787P15WE	222	10/200
787P20WE	223	10/200
787PWE	222	10/200
787SWE	222	10/200
787WE	222	10/200
787XNV	223	10/200
787XNV15	223	10/200
787XWE	222	10/200
788PXPWE	222	10/200
788PXWE	222	10/200
790BL	222	10/200
790WE	222	10/200
792/15WE	224	5
792/1015WE	224	5
792B1015WE	224	5
792BBL	224	5
792BL	223	10/200
792BWE	224	5
792WE	223	10/200
798HWE	223	10/200
798VWE	222	1
70000		
74703BL	265	10
74703WE	265	10
74704BL	265	10
74704WE	265	10
74705BL	265	10
74705WE	265	10
74706BL	265	10
74706WE	265	10
077599	110	1/10
077599	146	1/10
77811	231	10
77812	231	10
77814	231	10
77821	231	10
77822	231	10
77823	231	10
77827	231	10
77828	231	10
77841	231	10
77851	232	40
77852	232	10
77853	232	10
77867	231	10
77868	231	10
77874	231	10
77875	231	10
77880A	232	20
77881	232	20
77884A	232	20
77885	232	30
77886	232	20
77887	232	40
077890	232	1
77891	232	10
077892	232	1
77893	231	1
77894	231	1
77896	232	5/250
078452	367	1
078521	217	10/100
078524	217	10/100
80		
80WE	321	10/200
84WE	321	10/200

Cat. No	Page No	Box/ Carton
800		
800/2CL	270	50
800/2CL1	270	50
800/2CL3BU	270	50
800/2CL3WE	270	50
800/2WE	270	50
800FBL	208	10
800FCR	208	10
800FWE	208	10
800ID	270	50
800LH	270	10
800RJU/HWE	210	20/240
800WE	270	50
801/1BL	124	50
801/1WE	124	50
870IMBL	205	10/120
870IMCR	205	10/120
870IMWE	205	10/120
870MBL	205	10/120
870MCR	205	10/120
870MWE	205	10/120
883MBL	205	10/120
883MCR	205	10/120
883MWE	205	10/120
80000		
80051	232	50
80052	232	30
80053	232	30
80067	232	20
80151	232	100
80251	232	10/100
88230	367	40
88235	367	60
088310	282	10
90		
90/15WE	271	10/200
90/20WE	271	10/200
90/25WE	271	10/200
90BL	271	10/200
94WE	271	10/200
900		
954	218	12/144
954	264	20/120
954R	264	20/120
90000		
092001	74	5/100
092020	74	5/50
092024	74	5/30
92122	74	2
A		
A100	291	1
A101	291	1
A501	291	12
A505	291	1
A701	291	1
A770/1PLWE	227	10
A770/1WE	220	10
A770/2PLWE	227	10
A770/2WE	220	10
A770/3PLWE	227	10
A770/4PLWE	227	10

Cat. No	Page No	Box/ Carton
A800	291	20
A801	291	10
AC60WH	308	1
AJ218HT	307	1
AJ236HT	307	1
AL770/11PLWE	227	20
AL770/12PLWE	227	20
AL770/21PLWE	227	10
AL770/22PLWE	227	20
AODR60BL	308	10
AODR60SS	308	10
AODR60WH	308	10
AR400A2PMMGN	109	10/120
AR400A2PMWE	109	10/120
AR400A3PMMGN	109	10/120
AR400A3PMWE	109	10/120
AR400LMMGN	109	10/100
AR400LMWE	109	10/100
AR400TMMGN	109	10/100
AR400TMWE	109	10/100
AR450SMMGN	109	10/100
AR450SMWE	109	10/100
AR769P16MMGN	108	10/100
AR769P16MWE	108	10/100
AR770/1GOMGN	111	10/120
AR770/1GOWE	111	10/120
AR770/1HMGN	106	10/120
AR770/1HWE	106	10/120
AR770/1MGN	106	10/120
AR770/1WE	106	10/120
AR770/2GOMGN	111	10/120
AR770/2GOWE	111	10/120
AR770/2HMGN	106	10/120
AR770/2HWE	106	10/120
AR770/2MGN	106	10/120
AR770/2WE	106	10/120
AR770/3GOMGN	111	10/120
AR770/3GOWE	111	10/120
AR770/3HMGN	106	10/120
AR770/3HWE	106	10/120
AR770/3MGN	106	10/120
AR770/3WE	106	10/120
AR770/4GOMGN	111	10/120
AR770/4GOWE	111	10/120
AR770/4HMGN	106	10/120
AR770/4HWE	106	10/120
AR770/4MGN	106	10/120
AR770/4WE	106	10/120
AR770/5GOMGN	111	10/120
AR770/5GOWE	111	10/120
AR770/5HMGN	106	10/120
AR770/5HWE	106	10/120
AR770/5MGN	106	10/120
AR770/5WE	106	10/120
AR770/6GOMGN	111	10/120
AR770/6GOWE	111	10/120
AR770/6HMGN	106	10/120
AR770/6HWE	106	10/120
AR770/6MGN	106	10/120
AR770/6WE	106	10/120
AR770/35MMGN	108	10/100
AR770/35MOVENMG	108	10/100
AR770/35MOVENWE	108	10/100
AR770/35MWE	108	10/100
AR770/202MMGN	108	10/100
AR770/202MWE	108	10/100
AR770IMMGN	108	10/100
AR770IMWE	108	10/100
AR770MFANMGN	108	10/100
AR770MFANWE	108	10/100
AR770MHEATMGN	108	10/100
AR770MHEATWE	108	10/100
AR770MLIGHTMGN	108	10/100
AR770MLIGHTWE	108	10/100
AR770MMGN	108	10/100

Cat. No	Page No	Box/ Carton
AR770MONOFFMGN	108	10/100
AR770MONOFFWE	108	10/100
AR770MWASTEMGN	108	10/100
AR770MWASTEWE	108	10/100
AR770MWE	108	10/100
AR770MZONE1MGN	108	10/100
AR770MZONE1WE	108	10/100
AR770MZONE2MGN	108	10/100
AR770MZONE2WE	108	10/100
AR770MZONE3MGN	108	10/100
AR770MZONE3WE	108	10/100
AR770MZONE4MGN	108	10/100
AR770MZONE4WE	108	10/100
AR770USB1CMMGN	110	12
AR770USB1CMWE	110	12
AR770USB2ACMMGN	110	12
AR770USB2ACMWE	110	12
AR770USB2PSAMMG	109	12
AR770USB2PSAMWE	109	12
AR770USB2PSXMMG	109	12
AR770USB2PSXMWE	109	12
AR770XMMGN	108	10/100
AR770XMWE	108	10/100
AR777AMGN	107	5/50
AR777AWE	107	10/50
AR777MGN	107	10/100
AR777USB1CMGN	107	12
AR777USB1CWE	107	12
AR777USB2ACMGN	107	12
AR777USB2ACWE	107	12
AR777USBENGMGN	107	12
AR777USBENGWE	107	12
AR777WE	107	10/100
AR777XMGN	107	10/120
AR777XWE	107	10/120
AR787/15AMMGN	114	10/100
AR787/15AMWE	114	10/100
AR787AMMGN	114	10/100
AR787AMWE	114	10/100
AR787ARMMGN	114	10/100
AR787ARMWE	114	10/100
AR787MGN	114	10/100
AR787WE	114	10/100
AR870MMGN	109	10/100
AR870MWE	109	10/100
AR883MMGN	109	10/120
AR883MWE	109	10/120
AR910HDMIMMGN	116	10/120
AR910HDMIMWE	116	10/120
AR910USBMMGN	116	10/120
AR910USBMWE	116	10/120
AR920/770AMGN	114	10/100
AR920/770AMWE	114	10/100
AR9102FFFOXMMGN	115	10/120
AR9102FFFOXMWE	115	10/120
AS770/1PLWE	227	10
AS770/2PLWE	227	10
ASH108E	307	1
ASH113EPBS	307	1
ASL118H	307	1
ASL136H	307	1
AZ22	308	1
AZ40	308	1
AZSW32T	308	1
B		
B135	29	10/12
B165	29	10/12
B180	29	10/12
B280	29	5/12
B335	29	5/12
B365	29	5/12
B380	29	5/12

Cat. No	Page No	Box/ Carton
BH1MS	292	12
BH1WE	292	12
BH2DWE	292	1
BH2NDMS	292	1
BH2NDWE	292	1
BH4DWE	292	1
BH4NDMS	292	1
BH4NDWE	292	1

C

Cat. No	Page No	Box/ Carton
C20PS25P	75	25
C20S20P	75	25
C25S25P	75	25
CD107	277	5/50
CD1002	272	10/200
CDCB108	29	5/60
CDCB116	29	5/60
CDCB120	29	5/60
CDCB132	29	5/60
CF9HBS	293	1
CF9HWE	293	1
CF9JBS	293	1
CF9JWE	293	1
CF12H4WE	293	1
CF12HBS	293	1
CF12HWE	293	1
CF12J4WE	293	1
CF12J304	293	1
CF12J316L	293	1
CF12JBS	293	1
CF12JWE	293	1
CF13HAW	293	1
CF14H4WE	293	1
CF14H304	293	1
CF14HBS	293	1
CF14HWE	293	1
CF14J4WE	293	1
CF14J304	293	1
CF14J316L	293	1
CF14JBS	293	1
CF14JWE	293	1
CFBL9BS	294	20
CFBL9WE	294	20
CFBL12BS	294	20
CFBL12WE	294	20
CFBL14BS	294	20
CFBL14WE	294	20
CFBL12316L	294	20
CFBL14304	294	20
CFBL14316L	294	20
CFCLBS	294	12
CFCLWE	294	12
CFDR750HBS	294	10
CFDR750HWE	294	10
CFDR750JBS	294	10
CFDR750JWE	294	10
CFDR1500HWE	294	10
CFDR1500JWE	294	10
CFOLBS	294	12
CFOLWE	294	12
CFREMOTEH	294	20
CFREMOTEJ	294	20
CL3B	269	8
CL4B	269	8
CM400LHWE	211	6/72
CM400T/2WE	212	4/48
CM400THWE	211	6/72
CM400TSW/2NWE	212	4/48
CM400TSW/2WE	212	4/48
CM400TWE	212	6/72
CM435/2	218	4/48
CM777AWE	213	10/120
CM777NWE	213	4/48
CM777WE	213	4/48
CM787/15NWE	213	6/72
CM787/15WE	213	6/72
CM787NWE	213	6/72
CM787WE	213	6/72
CM910/1FFWE	214	10/120
CM910/1HLNWE	211	10/120
CM910/1HLWE	211	10/120
CM910/1HNWE	211	10/120
CM910/1HRDLWE	211	10/120
CM910/1HRDWE	211	10/120
CM910/1HWE	211	10/120
CM910/1IMHLWE	211	10/120
CM910/1IMHRDWE	211	10/120
CM910/1IMHWE	211	10/120
CM910/1IMWE	211	10/120
CM910/1NWE	211	10/120
CM910/1PWE	214	10/120
CM910/1RDWE	211	10/120
CM910/1RJ45HWE	214	10/120
CM910/1WE	211	10/120
CM910/15HNWE	211	10/120
CM910/15NWE	212	10/120
CM910/15WE	212	10/120
CM910/20DPRDWE	212	10/120
CM910/35HWE	211	10/120
CM910/35RDWE	212	10/120
CM910/35WE	212	10/120
CM910FC3WE	212	6/72
CM910MBLANKWE	216	20/240
CM910PLWE	217	10/120
CM910SF	218	10/120
CM910SHROUD	218	16/192
CM910XWE	211	10/120
CM920/1FC3HWE	211	6/72
CM920/1FC3WE	212	6/72
CM920/2FFWE	214	10/120
CM920/2HNWE	211	10/120
CM920/2HRDWE	211	10/120
CM920/2HWE	211	10/120
CM920/2NWE	211	10/120
CM920/2RDWE	211	10/120
CM920/2RJ45FHWE	214	10/120
CM920/2RJ45HWE	214	10/120
CM920/2RJ45PHWE	214	10/120
CM920/2WE	211	10/120
CM920/3HNWE	211	10/120
CM920/3HRDWE	211	10/120
CM920/3HWE	211	10/120
CM920PLBLANKWE	217	10/120
CM920PLWE	217	10/120
CM920SF	218	10/120
CM920SHROUD	218	8/96
CM920V1PLWE	217	10/120
CM920V2PLWE	217	10/120
CM940/3RDWE	212	4/48
CM940/3WE	212	4/48
CM940/4NWE	212	5/60
CM940/4RDWE	212	5/60
CM940/4RJFFPWE	214	4/48
CM940/4WE	212	5/60
CM940/6WE	212	4/48
CM940CCLIP	218	8/96
CM940PLWE	217	10/120
CM940RENDERBR	218	12/144
CM940SF	218	10/120
CM940SHROUD	218	4/48
CM940STUDBR	218	4/48
CM940WALLBOX	218	4/48
CMAR2MSF*	218	10/120
CMAR3MPLWE	217	10/120
CMAR3MSF*	218	10/120
CMKNOBWE	215	10/120
CMM400TWE	215	10/120
CMM787LWE	215	10/120
CMM787RWE	215	10/120
CMM910/15WE	215	10/120
CMM910/35WE	215	10/120
CMM910/770AWE	216	20/240
CMM910FFWE	216	10/120
CMM910IMWE	215	10/120
CMM910LNWE	215	10/120
CMM910LRDWE	215	10/120
CMM910LWE	215	10/120
CMM910NWE	215	10/120
CMM910PWE	216	10/120
CMM910RDWE	215	10/120
CMM910RNWE	215	10/120
CMM910RRDWE	215	10/120
CMM910RWE	215	10/120
CMM910VNWE	215	10/120
CMM910VWE	215	10/120
CMM910WE	215	10/120
CMM910XWE	215	10/120
CMM920/3NWE	215	10/120
CMM920/3WE	215	10/120
CMM920/770AWE	216	20/240
CMM920FFLWE	216	10/120
CMM920FFRWE	216	10/120
CMM920PLWE	216	10/120
CMM920PRWE	216	10/120
CMMRJ45C6LWE	216	10/120
CMMRJ45C6RWE	216	10/120
CMMRJ45C6WE	216	10/120

D

Cat. No	Page No	Box/ Carton
D2/2WE	279	5/100
D2LWE	279	5/120
D2PA	279	5/100
D2PA/2WE	279	5/100
D2PAB	279	5/100
D2USB	278	1
D2USB121	278	1
D2WE	279	5/120
D4USB	278	1
D5MBL	187	10/400
D5MWE	187	10/400
D35P6	270	10/240
D102WE	279	10/240
D104PA6	273	5/20
D104PACC	273	3/18
D104PAUSBWE	273	4/24
D104PAWE	273	3/18
D104WE	273	3/18
D105/1	273	5/45
D105/4TR	273	8/32
D105/4TRPA	273	8/32
D105/5TRPA	273	5/30
D105/5TRPACC	273	5/30
D105/12TRPA	273	8/16
D105/12TRPPCC	273	8/16
D105CR10ODS	277	3
D105CR20XDS	277	3
D105MS4WE	273	5/20
D105MS6RJWE	273	5/20
D105MS6WE	273	5/20
D105PA6	273	5/30
D105PA6CC	273	4/32
D105PA8	273	5/25
D105PA8CC	273	5/25
D105PAUSBWE	273	6/36
D105PBOSS5	274	5/20
D105PBOSSELPA8	274	4/12
D105PBOSSPA4	274	5/20
D105PBOSSPA6	274	4/12
D105POD4	274	3/18
D105POD6	274	3/18
D105SSPA4	274	4/40
D105TVAV4BL	273	6/20
D105TVAV6BL	273	4/16
D105TVAV8BL	273	4/12
D121	279	5/50
D121A	279	5/120
D121E	279	5/120
D121UK	279	5/120
D122	279	10/200
D332WE	321	10/200
D359WE	321	10/200
D641/B	285	8/80
D641/BFL	285	5/50
D641/BLR	285	5/20
D641/BLRCC	285	5/20
D641/BPCC	285	10/100
D641/BPWE	285	10/100
D641/PI	285	5/50
D641/PIFL	285	5/50
D641/PILR	285	5/50
D642/01	285	4/48
D642/05	285	4/48
D642/012R	285	4/48
D642/L1	285	8/48
D642/L2	285	8/48
D770CXFP	208	10/400
D770CXP	208	10/160
D809/1	278	1
D809/1DP	278	1
D809/1TWIN	278	1
D809/1TWIND	278	1
D810/2	278	1
D810/2DP	278	1
D810SLIM	278	1
D810SLIMDP	278	1
D810SLIMTP	278	1
D810SLIMTPDP	278	1
D817/2	278	1
D817/2DP	278	1
D817SLIM	278	1
D817SLIMDP	278	1
D817SLIMTP	278	1
D817SLIMTPDP	278	1
D818	278	1
D818DP	278	1
D818ODDP	278	1
D819/2	278	1
D819/2DP	278	1
D1001/1	321	5/60
D1002/1	272	10/200
D5100	271	5/50
D5101	271	5/50
D9500WE	321	5/30
DB12/12P0800H	61	1
DB12/12P08002D	62	1
DB12/12P08002DO	62	1
DB12/24P10002D	62	1
DB12/24P10002DO	62	1
DB12/36P12002D	62	1
DB12/36P12002DO	62	1
DB12/48P12002D	62	1
DB12/48P12002DO	62	1
DB12/60P14002D	62	1
DB12/60P14002DO	62	1
DB12/72P14002D	62	1
DB12/72P14002DO	62	1
DB24/24P1000H	61	1
DB24/24P12002D	62	1
DB24/24P12002DO	62	1
DB24/36P12002D	62	1
DB24/36P12002DO	62	1
DB24/48P14002D	62	1
DB24/48P14002DO	62	1
DB24/60P14002D	62	1
DB24/60P14002DO	62	1
DB24P250M0800H	61	1
DB24P250M0800HO	61	1
DB24PM2D0800H	61	1
DB24PM2D0800O	63	1
DB36/36P14002D	62	1
DB36/36P14002DO	62	1
DB36/48P14002D	62	1
DB36/48P14002DO	62	1
DB36P250M0800H	61	1
DB36P250M0800HO	61	1
DB36PM2D1000H	61	1
DB36PM2D1000O	63	1
DB48P250M1000H	61	1
DB48P250M1000HO	61	1
DB48PM2D1200H	61	1
DB48PM2D1200O	63	1
DB60P250M1000H	61	1
DB60P250M1000HO	61	1
DB60PM2D1200H	61	1
DB60PM2D1200O	63	1
DB72P250M1200H	61	1
DB72P250M1200HO	61	1
DB72PM2D1400H	61	1
DB72PM2D1400O	63	1
DB84P250M1400H	61	1
DB84P250M1400HO	61	1
DB84PM2D1400H	61	1
DB84PM2D1400O	63	1
DB96PM2D1200O	63	1
DBEQUIP-2D400H	61	1
DBEQUIP-2D400H	63	1
DBEQUIP-2D400HO	63	1
DF20	320	10/400
DF40	320	10/400
DGLS150	325	6/36
DGLWLED	325	8/32
DLI90TRIWE	300	1
DLI110TRIWE	300	1
DLI150TRIWE	300	1
DLI903KTILTWE	300	1
DLI904KTILTWE	300	1
DLI7001	300	48
DLI7002	300	48
DLI7003	300	48
DLI7004	300	48
DLI9001	300	24
DLI9002	300	24
DLI9003	300	24
DLI9004	300	24
DLI12501	300	24
DLI12502	300	24
DLI70014P	300	4/36
DLI90014P	300	4/24
DLS9001	301	24
DLS9002	301	24
DLS9003	301	24
DLS9004	301	24
DQ001	269	10/200
DQ002	269	10/200
DQ003	269	10/200
DQ004	269	10/200
DQ005	269	10/200
DQ006	269	10/200
DQ007	269	10/200
DQ008	269	10/200
DQ009	269	10/200
DQ010	269	10/200
DQ011	269	10/200
DQ105	269	5/50
DQ107	269	5/50
DQ108	269	5/50
DQ109	269	5/50
DQ110	269	5/50
DQ111	269	5/50
DQ201	269	5/50
DSLBAT4	325	20/80

E

Cat. No	Page No	Box/ Carton
EA140UG	266	10/180
EA143/2H	173	30
EA143/2W	173	30
EA143/3H	173	20
EA143/3W	173	20
EA143/4H	173	20
EA270PLSS	179	10
EA370PLSS	179	10
EA470PLSS	179	10
EA503/2H	173	30
EA503/2W	173	30
EA503/3H	173	30
EA503/3W	173	30
EA503/4H	173	30
EA751	174	10/120
EA910/0BL	173	10/120
EA910/0UG	173	10/120
EA910/0WE	173	10/120
EA910/1BL	173	10/120
EA910/1UG	173	10/120
EA910/1WE	173	10/120
EA910/2BL	173	10/120
EA910/2UG	173	10/120
EA910/2WE	173	10/120
EA910PMAWE	174	10/120
EA910PMAWE	179	10/120
EA920PMAWE	174	10/120
EA920PMAWE	179	10/120
EA2100PLSS	179	10
EA2270PLSS	179	10
EA2370PLSS	179	10
EA3100PLSS	179	10
EA3370PLSS	179	10
EA3470PLSS	179	10
EABOX270	179	1
EABOX370	179	1
EABOX470	179	1
EABOX2100	179	1
EABOX3100	179	1
EACIDLABELBU	173	1
EACIDLABELRED	173	1
EACIDLABELWE	173	1
EACIDLABELYE	173	1
EADIMKNOBBL	174	10/120
EADIMKNOBUG	174	10/120
EADIMKNOBWE	174	10/120
EAEPJUNCTION	179	1
EAEPNODE	179	1
EAFANKNOBBL	174	10/120
EAFANKNOBUG	174	10/120
EAFANKNOBWE	174	10/120
EAKEYFOB	174	10/120
EAPP	174	50/500
EAPWD5GKIT	174	10/120
EAPWD6GKIT	174	10/120
EAPWDSCREW	174	10/120
EAUSBEXT3WE	109	1
EAUSBEXT3WE	144	1
EAUSBEXT3WE	170	1
EC20A/4KTWE	154	5/60
EC510WE	153	6/72
EC511WE	153	4/48
EC520WE	153	6/72
EC521WE	153	6/72
EC524WE	153	6/72
EC570WE	153	4/48
EC571WE	153	4/48
EC572WE	153	4/48

Cat. No	Page No	Box/ Carton
EC573WE	153	4/48
EC770/0GPLCAWE	178	10/120
EC770/0GPLWE	157	10/120
EC770/1CAWE	175	10/120
EC770/1GPLCAWE	178	10/120
EC770/1GPLWE	157	10/120
EC770/1HCAWE	175	10/120
EC770/1HIPWE	152	6/72
EC770/1IPWE	152	6/72
EC770/1WE	152	10/120
EC770/2CAWE	175	10/120
EC770/2GPLCAWE	178	10/120
EC770/2GPLWE	157	10/120
EC770/2HCAWE	175	10/120
EC770/2HIPWE	152	6/72
EC770/2IPWE	152	6/72
EC770/2WE	152	10/120
EC770/3CAWE	175	10/120
EC770/3GPLCAWE	178	10/120
EC770/3GPLWE	157	10/120
EC770/3HCAWE	175	10/120
EC770/3WE	152	10/120
EC770/4CAWE	175	10/120
EC770/4GPLCAWE	178	10/120
EC770/4GPLWE	157	10/120
EC770/4HCAWE	175	10/120
EC770/4WE	152	10/120
EC770/5GPLCAWE	178	10/120
EC770/5GPLWE	157	10/120
EC770/5WE	152	10/120
EC770/6GPLCAWE	178	10/120
EC770/6GPLWE	157	10/120
EC770/6WE	152	10/120
EC770/40DPCTPWE	152	10/120
EC770/40DPWE	152	10/120
EC770/40WE	152	10/120
EC770XPRESSCAWE	175	10/120
EC777/15DPWE	155	10/120
EC777/15WE	155	10/120
EC777/15XWE	155	10/120
EC777AWE	155	10/120
EC777CABE	177	10/120
EC777CABU	176	10/120
EC777CARD	176	10/120
EC777CAWE	176	10/120
EC777DPWE	155	10/120
EC777EL10CABE	177	2/24
EC777EL10CABU	177	2/24
EC777EL10CARD	177	2/24
EC777EL10CAWE	177	2/24
EC777EL10IDCABE	177	2/24
EC777EL10IDCABU	177	2/24
EC777EL10IDCARD	177	2/24
EC777EL10IDCAWE	177	2/24
EC777EL30CAWE	177	2/24
EC777IDCABE	177	10/120
EC777NCABU	176	10/120
EC777NCARD	176	10/120
EC777NCAWE	176	10/120
EC777NIDCABU	176	10/120
EC777NIDCARD	176	10/120
EC777NIDCAWE	176	10/120
EC777RWE	155	10/120
EC777USB2IWE	155	6
EC777WE	155	10/120
EC777XCABU	176	10/120
EC777XCARD	176	10/120
EC777XCAWE	176	10/120
EC777XWE	155	10/120
EC787/2XWE	155	10/120
EC787/15CABE	176	10/120
EC787/15CABU	176	10/120
EC787/15CARD	176	10/120
EC787/15CAWE	176	10/120
EC787/15DPWE	155	10/120

Cat. No	Page No	Box/ Carton
EC787/15NCABU	176	10/120
EC787/15NCARD	176	10/120
EC787/15NCAWE	176	10/120
EC787/15WE	155	10/120
EC787/15XWE	155	10/120
EC787/20WE	155	10/120
EC787/25WE	155	10/120
EC787A/15WE	155	10/120
EC787ARWE	155	10/120
EC787AWE	155	10/120
EC787CABE	176	10/120
EC787CABU	176	10/120
EC787CARD	176	10/120
EC787CAWE	176	10/120
EC787DPWE	155	10/120
EC787IDCABE	176	10/120
EC787NCABU	176	10/120
EC787NCARD	176	10/120
EC787NCAWE	176	10/120
EC787NIDCABU	176	10/120
EC787NIDCARD	176	10/120
EC787NIDCAWE	176	10/120
EC787RWE	155	10/120
EC787U/32WE	155	10/120
EC787WE	155	10/120
EC787XCAWE	176	10/120
EC787XWE	155	10/120
EC798WE	156	2/16
EC910GPLWE	157	10/120
EC910J35WE	152	6/72
EC914WE	153	6/72
EC915WE	153	4/48
EC917WE	153	10/120
EC918WE	153	6/72
EC919WE	153	8/96
EC920GPLWE	157	10/120
EC920HDMIWE	152	4/48
EC920LJWE	152	8/96
EC920MSVIDWE	152	10/120
EC920USB2WE	152	3/36
EC920VGAWE	152	10/120
EC920WE	153	8/96
EC921WE	153	10/120
EC923TWE	153	6/72
EC924WE	153	6/72
EC925WE	153	8/96
ECBPASIGN	178	1
ECCPASIGN	178	1
ECCW2HPLWE	158	10
ECCW2WPLWE	158	10/120
ECCW3HPLWE	158	10
ECCW3WPLWE	158	10/120
ECCW4HPLWE	158	10
ECCWGPLWE	157	10/120
ECCWPLCAWE	179	10/120
ECCWPLWE	158	10/120
ECEES/1GCAWE	178	10/120
ECEES/2GCAWE	178	10/120
ECEL10HN2IDCABU	178	2/24
ECEL10HN2IDCARD	178	2/24
ECEL10HN2IDCAWE	178	2/24
ECEL10N2CABU	178	2/24
ECEL10N2CARD	178	2/24
ECEL10N2CAWE	178	2/24
ECEL10N2IDCABU	178	2/24
ECEL10N2IDCARD	178	2/24
ECEL10N2IDCAWE	178	2/24
ECEL10N2WE	154	4
ECFRAME	157	10/120
ECGAS1GPLCAWE	179	10/120
ECGAS2GPLCAWE	179	10/120
ECGAS3GPLCAWE	179	10/120
ECGAS4GPLCAWE	179	10/120
ECKFSWE	154	4/48
ECUSBWE	152	6/72

Cat. No	Page No	Box/ Carton
ECV777AWE	156	10/120
ECV777CAWE	177	10/120
ECV777NCABU	177	10/120
ECV777NCARD	177	10/120
ECV777NCAWE	177	10/120
ECV777WE	156	10/120
ECV777XCAWE	177	10/120
ECV777XWE	156	10/120
ECV787/2XWE	156	10/120
ECV787/15NCABU	177	10/120
ECV787/15NCARD	177	10/120
ECV787/15NCAWE	177	10/120
ECV787/15WE	156	10/120
ECV787A/15WE	156	10/120
ECV787ARWE	156	10/120
ECV787CAWE	177	10/120
ECV787NCABU	177	10/120
ECV787NCARD	177	10/120
ECV787NCAWE	177	10/120
ECV787NIDCABU	177	10/120
ECV787NIDCARD	177	10/120
ECV787NIDCAWE	177	10/120
ECV787RWE	156	10/120
ECV787WE	156	10/120
ECV787XCAWE	177	10/120
ECV787XWE	156	10/120
ECVAVALWE	178	1
ED3FCWE	142	100
ED20A/4KTBL	142	10/120
ED20A/4KTUG	142	10/120
ED20A/4KTWE	142	10/120
ED770/0GPLBL	147	10/120
ED770/0GPLUG	147	10/120
ED770/0GPLWE	147	10/120
ED770/1BL	141	10/120
ED770/1GPLBL	147	10/120
ED770/1GPLUG	147	10/120
ED770/1GPLWE	147	10/120
ED770/1HIPWE	142	6/72
ED770/1HWE	142	10/120
ED770/1IPUG	141	6/72
ED770/1IPWE	141	6/72
ED770/1PLBL	149	10/120
ED770/1PLDI	149	10/120
ED770/1PLIC	149	10/120
ED770/1PLMS	149	10/120
ED770/1PLUG	149	10/120
ED770/1PLWE	149	10/120
ED770/1UG	141	10/120
ED770/1WE	141	10/120
ED770/2BL	141	10/120
ED770/2GPLBL	147	10/120
ED770/2GPLUG	147	10/120
ED770/2GPLWE	147	10/120
ED770/2HIPWE	142	6/72
ED770/2HWE	142	10/120
ED770/2IPUG	141	6/72
ED770/2IPWE	141	6/72
ED770/2PLBL	149	10/120
ED770/2PLDI	149	10/120
ED770/2PLIC	149	10/120
ED770/2PLMS	149	10/120
ED770/2PLUG	149	10/120
ED770/2PLWE	149	10/120
ED770/2UG	141	10/120
ED770/2WE	141	10/120
ED770/3BL	141	10/120
ED770/3FLHCWE	142	10/120
ED770/3FLHWE	142	10/120
ED770/3GPLBL	147	10/120
ED770/3GPLUG	147	10/120
ED770/3GPLWE	147	10/120
ED770/3HWE	142	10/120
ED770/3IPWE	141	6/72
ED770/3PLBL	149	10/120

Cat. No	Page No	Box/ Carton
ED770/3PLDI	149	10/120
ED770/3PLIC	149	10/120
ED770/3PLMS	149	10/120
ED770/3PLUG	149	10/120
ED770/3PLWE	149	10/120
ED770/3UG	141	10/120
ED770/3WE	141	10/120
ED770/4BL	141	10/120
ED770/4FLHHCWE	142	10/120
ED770/4FLHHWE	142	10/120
ED770/4GPLBL	147	10/120
ED770/4GPLUG	147	10/120
ED770/4GPLWE	147	10/120
ED770/4HWE	142	10/120
ED770/4IPWE	141	6/72
ED770/4PLBL	149	10/120
ED770/4PLDI	149	10/120
ED770/4PLIC	149	10/120
ED770/4PLMS	149	10/120
ED770/4PLUG	149	10/120
ED770/4PLWE	149	10/120
ED770/4UG	141	10/120
ED770/4WE	141	10/120
ED770/5BL	141	10/120
ED770/5GPLBL	147	10/120
ED770/5GPLUG	147	10/120
ED770/5GPLWE	147	10/120
ED770/5HWE	142	10/120
ED770/5PLBL	149	10/120
ED770/5PLDI	149	10/120
ED770/5PLIC	149	10/120
ED770/5PLMS	149	10/120
ED770/5PLUG	149	10/120
ED770/5PLWE	149	10/120
ED770/5UG	141	10/120
ED770/5WE	141	10/120
ED770/6BL	141	10/120
ED770/6GPLBL	147	10/120
ED770/6GPLUG	147	10/120
ED770/6GPLWE	147	10/120
ED770/6HWE	142	10/120
ED770/6PLBL	149	10/120
ED770/6PLDI	149	10/120
ED770/6PLIC	149	10/120
ED770/6PLMS	149	10/120
ED770/6PLUG	149	10/120
ED770/6PLWE	149	10/120
ED770/6UG	141	10/120
ED770/6WE	141	10/120
ED770/40DPCTPBL	141	10/120
ED770/40DPCTPUG	141	10/120
ED770/40DPCTPWE	141	10/120
ED770/40DPUG	141	10/120
ED770/40DPWE	141	10/120
ED770/40UG	141	10/120
ED770/40WE	141	10/120
ED777/15UG	144	10/120
ED777/15WE	144	10/120
ED777ABL	144	10/120
ED777AESUG	144	10/120
ED777AESWE	144	10/120
ED777APLWE	150	10/120
ED777AUG	144	10/120
ED777AWE	144	10/120
ED777BL	143	10/120
ED777DPUG	144	10/120
ED777DPWE	144	10/120
ED777EL10UG	145	12
ED777EL10WE	145	12
ED777EL30UG	145	12
ED777EL30WE	145	12
ED777ESUG	144	10/120
ED777ESWE	144	10/120
ED777PLBL	150	10/120
ED777PLDI	150	10/120

Cat. No	Page No	Box/ Carton
ED777PLIC	150	10/120
ED777PLMS	150	10/120
ED777PLUG	150	10/120
ED777PLWE	150	10/120
ED777RUG	144	10/120
ED777RWE	144	10/120
ED777UG	143	10/120
ED777USB1CBL	145	12
ED777USB1CUG	145	12
ED777USB1CWE	145	12
ED777USB2ACBL	145	12
ED777USB2ACUG	145	12
ED777USB2ACWE	145	12
ED777USB2IBL	144	6/120
ED777USB2IUG	144	6/120
ED777USB2IWE	144	6/120
ED777USB2PSAUG	144	12
ED777USB2PSAWE	144	12
ED777USB2PSXUG	144	12
ED777USB2PSXWE	144	12
ED777USBENGBL	144	12
ED777USBENGUG	144	12
ED777USBENGWE	144	12
ED777WE	143	10/120
ED777XBL	144	10/120
ED777XPLBL	150	10/120
ED777XPLDI	150	10/120
ED777XPLIC	150	10/120
ED777XPLMS	150	10/120
ED777XPLUG	150	10/120
ED777XPLWE	150	10/120
ED777XUG	143	10/120
ED777XWE	143	10/120
ED787/2XUG	143	10/120
ED787/2XWE	143	10/120
ED787/15BL	143	10/120
ED787/15UG	143	10/120
ED787/15WE	143	10/120
ED787/20UG	143	10/120
ED787/20WE	143	10/120
ED787/25UG	143	10/120
ED787/25WE	143	10/120
ED787A/15UG	143	10/120
ED787A/15WE	143	10/120
ED787ARUG	143	10/120
ED787ARWE	143	10/120
ED787AUG	143	10/120
ED787AWE	143	10/120
ED787BL	143	10/120
ED787DPUG	143	10/120
ED787DPWE	143	10/120
ED787PLBL	150	10/120
ED787PLDI	150	10/120
ED787PLIC	150	10/120
ED787PLMS	150	10/120
ED787PLUG	150	10/120
ED787PLWE	150	10/120
ED787RUG	143	10/120
ED787RWE	143	10/120
ED787U/32BL	143	10/120
ED787U/32UG	143	10/120
ED787U/32WE	143	10/120
ED787UG	143	10/120
ED787WE	143	10/120
ED787XUG	143	10/120
ED787XWE	143	10/120
ED798BL	147	2/16
ED920GPLBL	147	10/120
ED920GPLWE	147	10/120
ED920PLBL	151	10/120
ED920PLIC	151	10/120
ED920PLMS	151	10/120
ED920PLUG	151	10/120
ED920PLWE	151	10/120
ED920USB2WE	146	3/36

Cat. No	Page No	Box/ Carton
ED920USB2WE	147	3/36
ED7774BL	145	5/40
ED7774UG	145	5/40
ED7774WE	145	5/40
EDA770/1GPLBL	148	10/120
EDA770/1GPLUG	148	10/120
EDA770/1GPLWE	148	10/120
EDA770/1WE	142	10/120
EDA770/2GPLBL	148	10/120
EDA770/2GPLUG	148	10/120
EDA770/2GPLWE	148	10/120
EDA770/2WE	142	10/120
EDA770/3GPLBL	148	10/120
EDA770/3GPLUG	148	10/120
EDA770/3GPLWE	148	10/120
EDA770/3WE	142	10/120
EDA770/4GPLBL	148	10/120
EDA770/4GPLUG	148	10/120
EDA770/4GPLWE	148	10/120
EDCWPLBL	151	10/120
EDCWPLDI	151	10/120
EDCWPLIC	151	10/120
EDCWPLMS	151	10/120
EDCWPLUG	151	10/120
EDCWPLWE	151	10/120
EDKFSWE	142	4/48
EDV777APLUG	150	10/120
EDV777APLWE	150	10/120
EDV777AUG	146	10/120
EDV777AWE	146	10/120
EDV777BL	146	10/120
EDV777PLBL	150	10/120
EDV777PLDI	151	10/120
EDV777PLIC	150	10/120
EDV777PLMS	150	10/120
EDV777PLUG	150	10/120
EDV777PLWE	150	10/120
EDV777UG	146	10/120
EDV777WE	146	10/120
EDV777XBL	146	10/120
EDV777XPLBL	151	10/120
EDV777XPLDI	151	10/120
EDV777XPLIC	151	10/120
EDV777XPLMS	151	10/120
EDV777XPLUG	151	10/120
EDV777XPLWE	151	10/120
EDV777XUG	146	10/120
EDV777XWE	146	10/120
EDV787/2XUG	146	10/120
EDV787/2XWE	146	10/120
EDV787/15UG	146	10/120
EDV787/15WE	146	10/120
EDV787A/15UG	146	10/120
EDV787A/15WE	146	10/120
EDV787ARUG	146	10/120
EDV787ARWE	146	10/120
EDV787BL	146	10/120
EDV787PLBL	150	10/120
EDV787PLDI	150	10/120
EDV787PLIC	150	10/120
EDV787PLMS	150	10/120
EDV787PLUG	150	10/120
EDV787PLWE	150	10/120
EDV787RUG	146	10/120
EDV787RWE	146	10/120
EDV787UG	146	10/120
EDV787WE	146	10/120
EDV787XUG	146	10/120
EDV787XWE	146	10/120
EDWCWEMS	110, 154	1/10
EF100/150TD	291	5/60
EF100RDWE	290	4
EF100SQSWE	290	4
EF100SQWE	290	4
EF150RDWE	290	4

Cat. No	Page No	Box/ Carton
EF150SQSWE	290	4
EF150SQWE	290	4
EF200RDMS	290	4
EF200RDWE	290	4
EF200SQWE	290	4
EF250RDMS	290	4
EF250RDWE	290	4
EF250SQWE	290	4
EFD01RDMS	290	1
EFD01RDWE	290	1
EFD01SQWE	290	1
EFGR200RDWE	291	1
EFGR250RDWE	291	1
EFIL100SQWE	291	1
EFIL150SQWE	291	1
EFS150SQSWE	290	4
EFS150SQWE	290	4
EM3FCBL	167	10/120
EM3FCUG	167	10/120
EM3FCWE	167	10/120
EM20A/4KTWE	166	10/120
EM250TRUG	167	10/120
EM250TRWE	167	10/120
EM400A2PBL	167	10/120
EM400A2PUG	167	10/120
EM400A2PWE	167	10/120
EM400A3PBL	167	10/120
EM400A3PUG	167	10/120
EM400A3PWE	167	10/120
EM400TRBL	167	10/120
EM400TRUG	167	10/120
EM400TRWE	167	10/120
EM700TRUG	167	10/120
EM700TRWE	167	10/120
EM770/20ACUG	164	10/120
EM770/20ACWE	164	10/120
EM770/20BL	160	10/120
EM770/20DPENGUG	161	10/120
EM770/20DPENGWE	161	10/120
EM770/20DPUG	161	10/120
EM770/20DPWE	161	10/120
EM770/20HWSUG	164	10/120
EM770/20HWSWE	164	10/120
EM770/20KT	166	10/120
EM770/20RDUG	160	10/120
EM770/20RDWE	160	10/120
EM770/20UG	160	10/120
EM770/20WE	160	10/120
EM770/25UG	160	10/120
EM770/25WE	160	10/120
EM770/32BL	160	10/120
EM770/32HOBUG	164	10/120
EM770/32HOBWE	164	10/120
EM770/32HOTPUG	164	10/120
EM770/32HOTPWE	164	10/120
EM770/32OVENUG	165	10/120
EM770/32OVENWE	165	10/120
EM770/32RANGEUG	165	10/120
EM770/32RANGEWE	165	10/120
EM770/32RDUG	165	10/120
EM770/32RDWE	165	10/120
EM770/32UG	160	10/120
EM770/32WE	160	10/120
EM770AIRCONUG	162	10/120
EM770AIRCONWE	162	10/120
EM770AUTOMANUG	162	10/120
EM770AUTOMANWE	162	10/120
EM770BED1UG	162	10/120
EM770BED1WE	162	10/120
EM770BED2UG	162	10/120
EM770BED2WE	162	10/120
EM770BED3UG	162	10/120
EM770BED3WE	162	10/120
EM770BED4UG	162	10/120
EM770BED4WE	162	10/120

Cat. No	Page No	Box/ Carton
EM770BL	160	10/120
EM770BYPASSUG	162	10/120
EM770BYPASSWE	162	10/120
EM770CARED	178	10/120
EM770CAWE	178	10/120
EM770DAYNIGHTUG	162	10/120
EM770DAYNIGHTWE	162	10/120
EM770DININGUG	162	10/120
EM770DININGWE	162	10/120
EM770DOVENBL	165	10/120
EM770DPBL	161	10/120
EM770DPRDUG	161	10/120
EM770DPRDWE	161	10/120
EM770DPUG	161	10/120
EM770DPWE	161	10/120
EM770DSENSORBL	164	10/120
EM770DUOHTUG	162	10/120
EM770DUOHTWE	162	10/120
EM770DUOUG	160	10/120
EM770DUOWE	160	10/120
EM770DWASHBL	162	10/120
EM770DWASHUG	162	10/120
EM770DWASHWE	162	10/120
EM770EXHUG	162	10/120
EM770EXHWE	162	10/120
EM770FANBL	162	10/120
EM770FANUG	162	10/120
EM770FANWE	162	10/120
EM770FIREBL	164	10/120
EM770FIREUG	164	10/120
EM770FIREWE	164	10/120
EM770FRIDGEUG	162	10/120
EM770FRIDGEWE	162	10/120
EM770GAMESUG	163	10/120
EM770GAMESWE	163	10/120
EM770GARDENBL	163	10/120
EM770GARDENUG	163	10/120
EM770GARDENWE	163	10/120
EM770HEATUG	163	10/120
EM770HEATWE	163	10/120
EM770HOBUG	163	10/120
EM770HOBWE	163	10/120
EM770HOODUG	163	10/120
EM770HOODWE	163	10/120
EM770IMBL	160	10/120
EM770IMLEDWE	160	10/120
EM770IMUG	160	10/120
EM770IMWE	160	10/120
EM770KITCHENUG	163	10/120
EM770KITCHENWE	163	10/120
EM770LEDBL	172	10/120
EM770LEDUG	172	10/120
EM770LEDWE	172	10/120
EM770LIGHTBL	163	10/120
EM770LIGHTUG	163	10/120
EM770LIGHTWE	163	10/120
EM770LIVINGUG	163	10/120
EM770LIVINGWE	163	10/120
EM770LOUNGEUG	163	10/120
EM770LOUNGEWE	163	10/120
EM770MICROWAVUG	164	10/120
EM770MICROWAVWE	164	10/120
EM770MIRRORBL	163	10/120
EM770MIRRORUG	163	10/120
EM770MIRRORWE	163	10/120
EM770OFFICEUG	164	10/120
EM770OFFICEWE	164	10/120
EM770OUTSIDEBL	163	10/120
EM770OUTSIDEUG	163	10/120
EM770OUTSIDEWE	163	10/120
EM770PRINTBL	165	10/120
EM770PRINTUG	165	10/120
EM770PRINTWE	165	10/120
EM770RANGEBL	165	10/120
EM770RDUG	160	10/120

Cat. No	Page No	Box/ Carton
EM770RDWE	160	10/120
EM770RUMPUSUG	164	10/120
EM770RUMPUSWE	164	10/120
EM770SENSORUG	164	10/120
EM770SENSORWE	164	10/120
EM770TVBL	163	10/120
EM770TVUG	163	10/120
EM770TVWE	163	10/120
EM770UG	160	10/120
EM770WASTEBL	164	10/120
EM770WASTEUG	164	10/120
EM770WASTEWE	164	10/120
EM770WE	160	10/120
EM770XAIRCONBL	162	10/120
EM770XAUTOMANBL	162	10/120
EM770XBL	161	10/120
EM770XDININGBL	162	10/120
EM770XDOORBL	161	10/120
EM770XDOORUG	161	10/120
EM770XDOORWE	161	10/120
EM770XFRIDGEBL	162	10/120
EM770XHEATBL	163	10/120
EM770XHOODBL	163	10/120
EM770XKITCHENBL	163	10/120
EM770XLIVINGBL	163	10/120
EM770XLOUNGEBL	163	10/120
EM770XMICROWAVBL	164	10/120
EM770XOFFICEBL	164	10/120
EM770XPRESSBL	161	10/120
EM770XPRESSUG	161	10/120
EM770XPRESSWE	161	10/120
EM770XRESETUG	161	10/120
EM770XRESETWE	161	10/120
EM770XUG	161	10/120
EM770XWE	161	10/120
EM770ZONE1UG	164	10/120
EM770ZONE1WE	164	10/120
EM770ZONE2UG	164	10/120
EM770ZONE2WE	164	10/120
EM770ZONE3UG	164	10/120
EM770ZONE3WE	164	10/120
EM770ZONE4UG	164	10/120
EM770ZONE4WE	164	10/120
EM787A/15WE	166	10/120
EM787ARWE	166	10/120
EM787AUG	166	10/120
EM787AWE	166	10/120
EM787U/20WE	166	10/120
EM787U/25WE	166	10/120
EM787WE	166	10/120
EM800BPBLUG	170	10/120
EM800BPBLWE	170	10/120
EM800BPRDUG	170	10/120
EM800BPRDWE	170	10/120
EM800SLAVEBL	160	10/120
EM800SLAVEUG	160	10/120
EM800SLAVEWE	160	10/120
EM802TDUG	166	10/120
EM802TDWE	166	10/120
EM803LEDUG	172	10/120
EM803LEDWE	172	10/120
EM803PIRBL	167	10/120
EM803PIRSBL	167	10/120
EM803PIRSUG	167	10/120
EM803PIRSWE	167	10/120
EM803PIRUG	167	10/120
EM803PIRWE	167	10/120
EM803SURGEUG	172	10/120
EM803SURGEWE	172	10/120
EM803TDUG	166	10/120
EM803TDWE	166	10/120
EM820BL0WE	166	10/120
EM820BL1WE	166	10/120
EM820BL10WE	166	10/120
EM820KLIOUG	166	10/120

Cat. No	Page No	Box/ Carton
EM820KLIOWE	166	10/120
EM820KLIUG	166	10/120
EM820KLIWE	166	10/120
EM820KLOUG	166	10/120
EM820KLOWE	166	10/120
EM883BL	160	10/120
EM883UG	160	10/120
EM883WE	160	10/120
EM910HDMIBL	170	10/120
EM910HDMIWE	170	10/120
EM910RPWE	174	10/120
EM910USBBL	170	10/120
EM910USBWE	170	10/120
EM2000ERC	167	1/10
EMCCBL	174	10/120
EMCCUG	174	10/120
EMCCWE	174	10/120
EMCLIDBL	173	10/120
EMCLIDUG	173	10/120
EMCLIDWE	173	10/120
EMELVNUG	160	10/120
EMELVNWE	160	10/120
EMELVUG	160	10/120
EMELVWE	160	10/120
EMFFFOXBL	168	10/120
EMFFFOXUG	168	10/120
EMFFFOXWE	168	10/120
EMIDUG	173	10/120
EMIDWE	173	10/120
EMKEYSTONEABL	169	20/240
EMKEYSTONEAUG	169	20/240
EMKEYSTONEAWE	169	20/240
EMKEYSTONEBUG	169	20/240
EMKEYSTONEBWE	169	20/240
EMKEYSTONECUG	169	20/240
EMKEYSTONECWE	169	20/240
EMKEYSTONEDUG	169	20/240
EMKEYSTONEDWE	169	20/240
EMKEYSTONEEUG	169	20/240
EMKEYSTONEEWE	169	20/240
EMKEYSTONELBL	169	10/240
EMKEYSTONELUG	169	10/240
EMKEYSTONELWE	169	10/240
EMPAPS1UG	172	10/120
EMPAPS1WE	172	10/120
EMPAPS2UG	172	10/120
EMPAPS2WE	172	10/120
EMPAUG	172	10/120
EMPAWE	172	10/120
EMPFBL	168	10/120
EMPFUG	168	10/120
EMPFWE	168	10/120
EMPS1UG	172	10/120
EMPS1WE	172	10/120
EMPS2UG	172	10/120
EMPS2WE	172	10/120
EMRCARDUG	170	10/120
EMRCARDWE	170	10/120
EMRCAWEUG	170	10/120
EMRCAWEWE	170	10/120
EMRCAYELUG	170	10/120
EMRCAYELWE	170	10/120
EMRJ11C3BL	168	10/120
EMRJ11C3BU	168	10/120
EMRJ11C3GR	168	10/120
EMRJ11C3RD	168	10/120
EMRJ11C3WE	168	10/120
EMRJ11C3YE	168	10/120
EMRJ45C5EBL	168	10/120
EMRJ45C5EBU	168	10/120
EMRJ45C5EGR	168	10/120
EMRJ45C5ERD	168	10/120
EMRJ45C5EWE	168	10/120
EMRJ45C5EYE	168	10/120
EMRJ45C6BL	168	10/120

Cat. No	Page No	Box/ Carton
EMRJ45C6BU	168	10/120
EMRJ45C6GR	168	10/120
EMRJ45C6RD	168	10/120
EMRJ45C6WE	168	10/120
EMRJ45C6YE	168	10/120
EMRSBL	161	10/120
EMRSUG	161	10/120
EMRSWE	161	10/120
EMSPBL	168	10/120
EMSPUG	168	10/120
EMSPWE	168	10/120
EMUSB1CBL	171	12
EMUSB1CUG	171	12
EMUSB1CWE	171	12
EMUSB2ACBL	171	12
EMUSB2ACUG	171	12
EMUSB2ACWE	171	12
EMUSB2PSABL	170	12
EMUSB2PSAUG	170	12
EMUSB2PSAWE	170	12
EMUSB2PSXBL	170	12
EMUSB2PSXUG	170	12
EMUSB2PSXWE	170	12
EMV787A/15WE	166	10/120
EMV787AWE	166	10/120
EMV787WE	166	10/120
ES3-2	123	1
ES3-3	123	1
ES4-2BL	123	1
ES4-2WE	123	1
ES4-3	123	1
ES6-2	123	1
ES6-3WE	123	1
ES9-2BL	123	1
ES9-2WE	123	1
ES12-2BL	123	1
ES12-2WE	123	1
ES15-2	123	1
ES18-2	123	1
ES21-2	123	1
ES24-2	123	1
ES770/0GPLWE	159	10/120
ES770/1GPLWE	159	10/120
ES770/2GPLWE	159	10/120
ES770/3GPLWE	159	10/120
ES770/4GPLWE	159	10/120
ES770/5GPLWE	159	10/120
ES770/6GPLWE	159	10/120
ES777WE	159	10/120
ES787WE	159	10/120
ESCWPLWE	159	10/120
F		
F20	320	25/1000
F40	320	25/1000
F180	29	10/12
F380	29	5/12
F1036/3WE	219	10/200
F1036PWE	219	10/200
FLUSHCAPS	226	1
G		
GL20WMPLBL	324	20
GL20WMPLBL4P	324	4
GL20WMSLBL	324	40
GL20WSLSS	324	3/12
GL35WPLBL	324	20
GL35WPLSS	324	10
GLLEDPLBL	324	40
GLLEDPLSS	324	24

Cat. No	Page No	Box/ Carton
GLLEDSLBL	324	20
GLLEDSLSS	324	3/36
H		
HC01S	58	10/180
HC02S	58	6/108
HC03S	58	4/80
HEE18F	59	4
HEE18FS-BP	60	1
HEE18S	59	4
HEEPF5	58	200
HL12F	59	1
HL12FS-BP	60	1
HL12S	59	5/5
HL24F	59	1
HL24FS-BP	60	1
HL24S	59	1
HL36F	59	1
HL36FS-BP	60	1
HL36S	59	1
HL48F	59	1
HL48FS-BP	60	1
HL48S	59	1
HLC12F	59	1/1
HLC12MP	59	1/1
HLC12S	59	1/1
HLC18F	59	1/1
HLC18MP	59	1/1
HLC18S	59	1/1
HLC24F	59	1/1
HLC24S	59	1/1
HLC36F	59	1/1
HLC36S	59	1/1
HMCBL	28	450
HPM0800L2425F	63	1
HPM0800L3625F	63	1
HPM1000L4825F	63	1
HPM1000L6025F	63	1
HPM1200L7225F	63	1
HPM1200L8425F	63	1
I		
IZBRA	310	1
IZSPM	310	1
IZTRAY	310	1
J		
J170	268	5/60
K		
KNOB1BL	206	10
KNOB1CR	206	10
KNOB1WE	206	10
L		
L275HLES	292	20
L375HLES	292	20
LA6001BUGBC	309	1
LA6001BUGES	309	1
LA6001FILBC	309	1
LA6001FILES	309	1
LA60013KBC	309	10/150
LA60013KES	309	10/150
LA60014KBC	309	10/150
LA60014KES	309	10/150
LA60023KBC	309	10/150
LA60023KBCD	309	1

Cat. No	Page No	Box/ Carton
LA60023KES	309	10/150
LA60023KESD	309	1
LA60024KBC	309	10/150
LA60024KES	309	10/150
LBL014KWE	304	6
LDL013KPS	301	20
LDL013KWE	301	20
LDL014KPS	301	20
LDL014KWE	301	20
LDL023KPS	301	20
LDL023KWE	301	20
LDL024KPS	301	20
LDL024KWE	301	20
LDL033KPS	301	20
LDL033KWE	301	20
LDL034KPS	301	20
LDL034KWE	301	20
LDL043KPS	300	1
LDL043KWE	300	20
LDL044KPS	300	1
LDL044KWE	300	20
LDR01N700/36	303	24
LDR02D700/18	303	50
LEP120WE	301	12/96
LEP150WE	301	12/96
LFL0110WBL	304	12
LFL0120WBL	304	6
LFL0130WBL	304	4
LFL0140WBL	304	4
LFL0213WBL	304	10
LFS013KBL	304	10
LFS0110WBL	304	12
LFS0130WBL	304	2
LFS0214WBL	304	6
LFS0316WBL	304	4
LGU10013K	309	10/100
LGU10014K	309	10/100
LM100L	291	2
LMR16703KWE	301	16/64
LMR16704KWE	301	16/64
LMR16903KWE	301	12/48
LMR16904KWE	301	12/48
LN3FCBL	125	9/72
LN3FCCR	125	9/72
LN3FCHBL	126	9/72
LN3FCHCR	126	9/72
LN3FCHWE	126	9/72
LN3FCWE	125	9/72
LN400LHCR	126	9/72
LN400LHWE	126	9/72
LN400LWE	125	9/72
LN400TBL	125	9/72
LN400TCR	125	9/72
LN400THBL	126	9/72
LN400THCR	126	9/72
LN400THWE	126	9/72
LN400TWE	125	9/72
LN429	140	10/120
LN450PBL	125	9/72
LN450PCR	125	9/72
LN450PWE	125	9/72
LN711	140	10/100
LN751	140	10/300
LN770/0GPLBL	130	10/160
LN770/0GPLCR	130	10/160
LN770/0GPLWE	130	10/160
LN770/0PLAS	134	10/200
LN770/0PLAU	134	10/200
LN770/0PLBL	134	40/200
LN770/0PLCR	134	40/200
LN770/0PLDG	134	10/200
LN770/0PLGL	134	10/200
LN770/0PLKH	134	10/200
LN770/0PLLG	134	10/200

Cat. No	Page No	Box/ Carton
LN770/0PLMI	134	10/200
LN770/0PLMS	134	10/200
LN770/0PLOG	134	10/200
LN770/0PLOL	134	10/200
LN770/0PLPI	134	10/200
LN770/0PLRE	134	10/200
LN770/0PLSB	134	10/200
LN770/0PLVA	134	10/200
LN770/0PLWE	134	10/200
LN770/0PLYE	134	10/200
LN770/1BL	125	10/80
LN770/1CR	125	10/80
LN770/1CXBL	129	10/160
LN770/1CXWE	129	10/160
LN770/1FCXWE	129	10/160
LN770/1GPLBL	130	10/160
LN770/1GPLCR	130	10/160
LN770/1GPLWE	130	10/160
LN770/1HBL	126	10/80
LN770/1HCR	126	10/80
LN770/1HWE	126	10/80
LN770/1PLAS	131	10/200
LN770/1PLAU	131	10/200
LN770/1PLBL	131	10/200
LN770/1PLCR	131	10/200
LN770/1PLDG	131	10/200
LN770/1PLGL	131	10/200
LN770/1PLKH	131	10/200
LN770/1PLLG	131	10/200
LN770/1PLMI	131	10/200
LN770/1PLMS	131	10/200
LN770/1PLOG	131	10/200
LN770/1PLOL	131	10/200
LN770/1PLPI	131	10/200
LN770/1PLRE	131	10/200
LN770/1PLSB	131	10/200
LN770/1PLVA	131	10/200
LN770/1PLWE	131	10/200
LN770/1PLYE	131	10/200
LN770/1RJ1BL	129	10/160
LN770/1RJ1CR	129	10/160
LN770/1RJ1WE	129	10/160
LN770/1RJ2EBL	129	10/160
LN770/1RJ2ECR	129	10/160
LN770/1RJ2EWE	129	10/160
LN770/1WE	125	10/80
LN770/2BL	125	10/80
LN770/2CR	125	10/80
LN770/2CX/FCXWE	129	10/160
LN770/2GPLBL	130	10/160
LN770/2GPLCR	130	10/160
LN770/2GPLWE	130	10/160
LN770/2HBL	126	10/80
LN770/2HCR	126	10/80
LN770/2HWE	126	10/80
LN770/2PLAS	131	10/200
LN770/2PLAU	132	10/200
LN770/2PLBL	131	40/200
LN770/2PLCR	131	40/200
LN770/2PLDG	131	10/200
LN770/2PLGL	131	10/200
LN770/2PLKH	131	10/200
LN770/2PLLG	131	10/200
LN770/2PLMI	131	10/200
LN770/2PLMS	131	10/200
LN770/2PLOG	131	10/200
LN770/2PLOL	131	10/200
LN770/2PLPI	131	10/200
LN770/2PLRE	132	10/200
LN770/2PLSB	132	10/200
LN770/2PLVA	131	10/200
LN770/2PLWE	131	10/200
LN770/2PLYE	131	10/200
LN770/2RJ1BL	129	10/160
LN770/2RJ1CR	129	10/160

Cat. No	Page No	Box/ Carton
LN770/2RJ1WE	129	10/160
LN770/2RJ2EBL	129	10/160
LN770/2RJ2ECR	129	10/160
LN770/2RJ2EWE	129	10/160
LN770/2WE	125	10/80
LN770/3BL	125	10/80
LN770/3CR	125	10/80
LN770/3GPLBL	130	10/160
LN770/3GPLCR	130	10/160
LN770/3GPLWE	130	10/160
LN770/3HBL	126	10/80
LN770/3HCR	126	10/80
LN770/3HWE	126	10/80
LN770/3PLAS	132	10/200
LN770/3PLAU	132	10/200
LN770/3PLBL	132	40/200
LN770/3PLCR	132	40/200
LN770/3PLDG	132	10/200
LN770/3PLGL	132	10/200
LN770/3PLKH	132	10/200
LN770/3PLLG	132	10/200
LN770/3PLMI	132	10/200
LN770/3PLMS	132	10/200
LN770/3PLOG	132	10/200
LN770/3PLOL	132	10/200
LN770/3PLPI	132	10/200
LN770/3PLRE	132	10/200
LN770/3PLSB	132	10/200
LN770/3PLVA	132	10/200
LN770/3PLWE	132	40/200
LN770/3PLYE	132	10/200
LN770/3WE	125	10/80
LN770/4BL	125	10/80
LN770/4CR	125	10/80
LN770/4GPLBL	130	10/160
LN770/4GPLCR	130	10/160
LN770/4GPLWE	130	10/160
LN770/4HBL	126	10/80
LN770/4HCR	126	10/80
LN770/4HWE	126	10/80
LN770/4PLAS	132	10/200
LN770/4PLAU	133	10/200
LN770/4PLBL	132	40/200
LN770/4PLCR	132	40/200
LN770/4PLDG	132	10/200
LN770/4PLGL	132	10/200
LN770/4PLKH	132	10/200
LN770/4PLLG	132	10/200
LN770/4PLMI	133	10/200
LN770/4PLMS	132	10/200
LN770/4PLOG	133	10/200
LN770/4PLOL	132	10/200
LN770/4PLPI	133	10/200
LN770/4PLRE	133	10/200
LN770/4PLSB	133	10/200
LN770/4PLVA	132	10/200
LN770/4PLWE	132	40/200
LN770/4PLYE	133	10/200
LN770/4WE	125	10/80
LN770/5BL	125	10/80
LN770/5CR	125	10/80
LN770/5GPLBL	130	10/160
LN770/5GPLCR	130	10/160
LN770/5GPLWE	130	10/160
LN770/5HBL	126	10/80
LN770/5HCR	126	10/80
LN770/5HWE	126	10/80
LN770/5PLAS	133	10/200
LN770/5PLAU	133	10/200
LN770/5PLBL	133	40/200
LN770/5PLCR	133	40/200
LN770/5PLDG	133	10/200
LN770/5PLGL	133	10/200
LN770/5PLKH	133	10/200
LN770/5PLLG	133	10/200

Cat. No	Page No	Box/ Carton
LN770/5PLMI	133	10/200
LN770/5PLMS	133	10/200
LN770/5PLOG	133	10/200
LN770/5PLOL	133	10/200
LN770/5PLPI	133	10/200
LN770/5PLRE	133	10/200
LN770/5PLSB	133	10/200
LN770/5PLVA	133	10/200
LN770/5PLWE	133	40/200
LN770/5PLYE	133	10/200
LN770/5WE	125	10/80
LN770/6BL	125	10/80
LN770/6CR	125	10/80
LN770/6GPLBL	130	10/160
LN770/6GPLCR	130	10/160
LN770/6GPLWE	130	10/160
LN770/6HBL	126	10/80
LN770/6HCR	126	10/80
LN770/6HWE	126	10/80
LN770/6PLAS	133	10/200
LN770/6PLAU	134	10/200
LN770/6PLBL	133	40/200
LN770/6PLCR	133	40/200
LN770/6PLDG	134	10/200
LN770/6PLGL	133	10/200
LN770/6PLKH	134	10/200
LN770/6PLLG	134	10/200
LN770/6PLMI	134	10/200
LN770/6PLMS	133	10/200
LN770/6PLOG	134	10/200
LN770/6PLOL	134	10/200
LN770/6PLPI	134	10/200
LN770/6PLRE	134	10/200
LN770/6PLSB	134	10/200
LN770/6PLVA	134	10/200
LN770/6PLWE	133	40/200
LN770/6PLYE	134	10/200
LN770/6WE	125	10/80
LN777ABL	128	10/120
LN777ACR	128	10/120
LN777AESBLBL	128	10/120
LN777AESBLGY	128	10/120
LN777AESPLAS	139	10/120
LN777AESPLAU	139	10/120
LN777AESPLBL	139	10/120
LN777AESPLDG	139	10/120
LN777AESPLGL	139	10/120
LN777AESPLKH	139	10/120
LN777AESPLLG	139	10/120
LN777AESPLMI	139	10/120
LN777AESPLMS	139	10/120
LN777AESPLOG	139	10/120
LN777AESPLOL	139	10/120
LN777AESPLPI	139	10/120
LN777AESPLRE	139	10/120
LN777AESPLSB	139	10/120
LN777AESPLVA	139	10/120
LN777AESPLWE	139	10/120
LN777AESPLYE	139	10/120
LN777AESWEGY	128	10/120
LN777AESWEWE	128	10/120
LN777APLAS	138	10/200
LN777APLAU	138	10/200
LN777APLBL	138	10/200
LN777APLCR	138	10/200
LN777APLDG	138	10/200
LN777APLGL	138	10/200
LN777APLKH	138	10/200
LN777APLLG	138	10/200
LN777APLMI	138	10/200
LN777APLMS	138	10/200
LN777APLOG	138	10/200
LN777APLOL	138	10/200
LN777APLPI	138	10/200
LN777APLRE	138	10/200

Cat. No	Page No	Box/ Carton
LN777APLSB	138	10/200
LN777APLVA	138	10/200
LN777APLWE	138	10/200
LN777APLYE	138	10/200
LN777AWE	128	10/120
LN777BL	128	10/120
LN777CR	128	10/120
LN777ESBLBL	128	10/120
LN777ESBLGY	128	10/120
LN777ESPLAS	138	10/120
LN777ESPLAU	139	10/120
LN777ESPLBL	138	10/120
LN777ESPLDG	138	10/120
LN777ESPLGL	138	10/120
LN777ESPLKH	138	10/120
LN777ESPLLG	138	10/120
LN777ESPLMI	139	10/120
LN777ESPLMS	138	10/120
LN777ESPLOG	139	10/120
LN777ESPLOL	138	10/120
LN777ESPLPI	139	10/120
LN777ESPLRE	139	10/120
LN777ESPLSB	139	10/120
LN777ESPLVA	138	10/120
LN777ESPLWE	138	10/120
LN777ESPLYE	139	10/120
LN777ESWEGY	128	10/120
LN777ESWEWE	128	10/120
LN777PLAS	137	10/200
LN777PLAU	137	10/200
LN777PLBL	137	40/200
LN777PLCR	137	40/200
LN777PLDG	137	10/200
LN777PLGL	137	10/200
LN777PLKH	137	10/200
LN777PLLG	137	10/200
LN777PLMI	137	10/200
LN777PLMS	137	10/200
LN777PLOG	137	10/200
LN777PLOL	137	10/200
LN777PLPI	137	10/200
LN777PLRE	137	10/200
LN777PLSB	137	10/200
LN777PLVA	137	10/200
LN777PLWE	137	10/200
LN777PLYE	137	10/200
LN777WE	128	10/120
LN777XBL	128	10/120
LN777XCR	128	10/120
LN777XPLAS	137	10/200
LN777XPLAU	138	10/200
LN777XPLBL	137	10/200
LN777XPLCR	137	10/200
LN777XPLDG	137	10/200
LN777XPLGL	137	10/200
LN777XPLKH	137	10/200
LN777XPLLG	137	10/200
LN777XPLMI	137	10/200
LN777XPLMS	137	10/200
LN777XPLOG	137	10/200
LN777XPLOL	137	10/200
LN777XPLPI	138	10/200
LN777XPLRE	138	10/200
LN777XPLSB	138	10/200
LN777XPLVA	137	10/200
LN777XPLWE	137	10/200
LN777XPLYE	137	10/200
LN777XWE	128	10/120
LN787/15BL	128	10/120
LN787/15CR	128	10/120
LN787/15WE	128	10/120
LN787BL	128	10/120
LN787CR	128	10/120
LN787PLAS	136	10/200
LN787PLAU	136	10/200

Cat. No	Page No	Box/ Carton
LN787PLBL	136	40/200
LN787PLCR	136	40/200
LN787PLDG	136	10/200
LN787PLGL	136	10/200
LN787PLKH	136	10/200
LN787PLLG	136	10/200
LN787PLMI	136	10/200
LN787PLMS	136	10/200
LN787PLOG	136	10/200
LN787PLOL	136	10/200
LN787PLPI	136	10/200
LN787PLRE	136	10/200
LN787PLSB	136	10/200
LN787PLVA	136	10/200
LN787PLWE	136	40/200
LN787PLYE	136	10/200
LN787WE	128	10/120
LN787XBL	128	10/120
LN787XCR	128	10/120
LN787XPLAS	136	10/200
LN787XPLAU	136	10/200
LN787XPLBL	136	40/200
LN787XPLCR	136	40/200
LN787XPLDG	136	10/200
LN787XPLGL	136	10/200
LN787XPLKH	136	10/200
LN787XPLMI	136	10/200
LN787XPLMS	136	10/200
LN787XPLPI	136	10/200
LN787XPLVA	136	10/200
LN787XPLWE	136	40/200
LN787XWE	128	10/120
LNA770/1BL	127	10/120
LNA770/1CR	127	10/120
LNA770/1PLAS	135	10/200
LNA770/1PLAU	135	10/200
LNA770/1PLBL	135	10/200
LNA770/1PLCR	135	10/200
LNA770/1PLDG	135	10/200
LNA770/1PLGL	135	10/200
LNA770/1PLKH	135	10/200
LNA770/1PLLG	135	10/200
LNA770/1PLMI	135	10/200
LNA770/1PLMS	135	10/200
LNA770/1PLOG	135	10/200
LNA770/1PLOL	135	10/200
LNA770/1PLPI	135	10/200
LNA770/1PLRE	135	10/200
LNA770/1PLSB	135	10/200
LNA770/1PLVA	135	10/200
LNA770/1PLWE	135	10/200
LNA770/1PLYE	135	10/200
LNA770/1WE	127	10/120
LNA770/2BL	127	10/120
LNA770/2CR	127	10/120
LNA770/2PLAS	135	10/200
LNA770/2PLBL	135	10/200
LNA770/2PLCR	135	10/200
LNA770/2PLDG	135	10/200
LNA770/2PLGL	135	10/200
LNA770/2PLLG	135	10/200
LNA770/2PLMI	135	10/200
LNA770/2PLMS	135	10/200
LNA770/2PLOL	135	10/200
LNA770/2PLRE	135	10/200
LNA770/2PLSB	135	10/200
LNA770/2PLWE	135	10/200
LNA770/2WE	127	10/120
LNPC	140	500
LOL013KWE	303	6
LOL014KWE	303	6
LOL023KPS	303	4
LOL024KPS	303	4
LPA013KWE	301	10
LPA014KWE	301	10

Cat. No	Page No	Box/ Carton
LPAR38013K	309	12
LPD013KBL	303	12
LPD013KPS	303	12
LPD013KWE	303	12
LPD023KWE	303	6
LPD033KPS	303	6
LR80014K	292	12/108
LR80014K	309	12/108
LR80023K	309	10/60
LR80024K	309	10/60
LSL013K	303	24
LSP0112WBL	304	6
LSP0125WBL	304	6
LSS0112WBL	304	6
LSS0125WBL	304	6
LSS0209WBL	304	8
LST013KPS	303	100
LST013KWE	303	100
LST023KPS	303	100
LST023KWE	303	100
LWK0110WBL	304	8
LWK0120WBL	304	8
LWK0130WBL	304	4
LWK0220WBL	304	2
LWK0240WBL	304	2
LWL013KPS	303	24
LWL023KPS	303	24
LWL033KWE	303	12
LWL053KWE	303	24
LWL063KPS	303	12
M		
M5F114	307	12
M5F128	307	12
M5F228	307	12
M5FD128	307	8
M5FD214	307	6
M5FD228	307	6
M5FK228-12	307	2
M5R22CC	312	40
M5R22LC	312	40
M5R22NC	312	40
M5R32CC	312	20
M5R32NC	312	20
M5R40CC	312	30
M5R40NC	312	30
M5T14CC	312	50
M5T14LC	312	50
M5T14NC	312	50
M5T21CC	312	50
M5T28CC	312	50
M5T28D	312	50
M5T28NC	312	50
M5T35NC	312	25
M787MBL	122	10
M787MWE	122	10
M788MBL	122	10
M788MRED	122	10
M788MWE	122	10
M788NSMCR	122	10
M788NSMRED	122	10
M788NSMWE	122	10
M788PMWE	122	10
M788PNHMSP	122	10
M788PNHMWE	122	10
M788PNSMBL	122	10
M788PNSMRED	122	10
M788PNSMWE	122	10
M78815MWE	122	10
MABABBPB	317	10/200
MABABCPB	317	10/200
MABABGPB	317	10/200
MABABRPB	317	10/200

Cat. No	Page No	Box/ Carton
MABABYPB	317	10/200
MAFMWCCPB	318	10/200
MAFTD	317	10/200
MAFTDBPB	317	10/200
MAFTDCPB	317	10/200
MAFTDGPB	317	10/200
MAFTDRPB	317	10/200
MAFTDYPB	317	10/200
MAFTE	318	10/200
MAFTECPB	317	10/200
MAFXNBPB	318	10/200
MAFXNCPB	318	10/200
MAFXNGPB	318	10/200
MAFXNRPB	318	10/200
MAFXNYPB	318	10/200
MAFXTRBB	318	10/200
MAFXTRBG	318	10/200
MAFXTRBR	318	10/200
MAG940C	316	10/200
MAG940CX	316	10/200
MAG940F	316	20/200
MAG940FX	317	10/200
MAG950C	317	20/200
MAG975C	317	20/200
MAG975F	317	20/200
MAG9100C	316	20/200
MAG9100F	316	20/200
MAGX5P5P	320	20/200
MAGX5R5P	320	20/200
MAGXHT5P	320	20/200
MALC6WH	306	30
MALC7WH	306	30
MALC113	306	20
MALC113G9	306	20
MALC113G9SI	306	16
MALC113G9W	306	16
MALC113VP	306	10
MALC115	306	6
MALC317	305	60
MALC317BC	305	60
MALC317BCMC	305	24
MALC515	305	60
MALC515BC	305	60
MALC515WHMC	305	24
MAMR8CPB	317	10/200
MAMR820CPB	317	10/200
MATEN38CPB	317	10/200
MAWFLC4P	318	100
MBIK40	310	1
MC08	314	25/250
MC10	314	25/200
MC13	314	25
MC15	314	25
MC18S	314	25
MC18SDM	314	25
MC37SDM	314	25
MCBLOCK	28	5/60
MCC18Y	313	25
MCC36Y	313	25
MELMR11ESNS	312	50
MELQ48BCNS	311	25
MELQ48ESNS	310	25
MELQAL11BC	311	50
MELQAL11BCN	311	50
MELQAL11ES	310	50
MELQAL11ESN	310	50
MELQAL15BC	311	50
MELQAL15BCN	311	50
MELQAL15ES	310	50
MELQAL15ESN	310	50
MELQAL20BCN	311	20/100
MELQAL20ES	310	20/100
MELQAL20ESN	310	20/100
MELS20BLKBC	311	4/40

Cat. No	Page No	Box/ Carton
MELS20BLKES	311	4/40
MELS105GESCW	311	10
MELSBUG20BC	311	25
MELSBUG20ES	311	25
MELSD15ES	311	20/100
MELSD20BC	311	20/100
MELSD20ES	311	20/100
MELSD20ESN	311	20/100
MELST211ESN	312	100
MELST215BC	312	20/100
MELST215BCN	312	20/100
MELST215ES	312	20/100
MELST215ESN	312	20/100
MELT28ESNS	310	10/50
MELTG9BC	310	50
MELTG9BCN	310	50
MELTG9ES	310	50
MELTG9ESN	310	50
MELTG9SES	310	50
MELTG11BC	310	50
MELTG11BCN	310	50
MELTG11ES	310	50
MELTG11ESN	310	50
MELTG15BC	310	50
MELTG15BCN	310	50
MELTG15ES	310	50
MELTG15ESN	310	50
MELTS20BCNS	311	20
MELTS20BCS	311	20
MELTS20ESNS	311	20
MELTS20ESS	311	20
MF30SSBR-HG	313	25
MF40SSBR-HG	313	25
MG30HG	313	25
MG40HG	313	25
MG58HG	313	25
MG670BL	123	10
MG670WE	123	10
MG672BL	123	10
MG672WE	123	10
MG673BL	123	10
MG673WE	123	10
MGU317BCMCK	305	24
MGU317BCMCKT	305	4
MGU317WHMCK	305	24
MGU317WHMCKT	305	4
MGU515BCMCK	305	24
MGU515BCMCKT	305	4
MGU515WHMCK	305	24
MGU1040	317	10/200
MGU1040E	317	10/100
MGU1040G	317	10/200
MGU1040R	317	10/200
MGU1040Y	317	10/200
MHKIT1	282	1
MHKIT2	282	1
MHKIT3	282	1
MHKIT4	282	1
MI15	313	25/200
MI20	313	25
MI40	313	25
MJ40	313	10/40
MJC20CDP	316	25/250
MJC35CDP	316	25/250
MJC1035	316	20/200
MJC2035	316	20/200
MK317BC35	305	50
MK317WH35	305	50
MK515BC35	305	50
MK515WH35	305	50
MNCAN28BCC	315	20/100
MNCAN28BCF	315	10/100
MNCAN28ESC	315	20/100
MNCAN28ESF	315	10/100

Cat. No	Page No	Box/ Carton
MNCAN28SBCC	315	20/100
MNCAN28SBCF	315	10/100
MNCAN28SESC	315	20/100
MNCAN28SESF	315	10/100
MNFRD28BCC	315	10/100
MNFRD28BCF	315	10/100
MNFRD28ESC	315	10/100
MNFRD28ESF	315	10/100
MNFRD28SBCC	315	10/100
MNFRD28SBCF	315	10/100
MNFRD28SESC	315	10/100
MNFRD28SESF	315	10/100
MNG933	315	20/100
MNG942	315	20/200
MNGLS28BCC	316	10/100
MNGLS28BCF	316	10/100
MNGLS28ESC	316	10/100
MNGLS28ESF	316	10/100
MNGLS42BCC	316	10/100
MNGLS42BCC2P	316	20/60
MNGLS42BCF	316	10/100
MNGLS42ESC	316	10/100
MNGLS42ESF	316	10/100
MNGLS52BCC	316	10/100
MNGLS52BCF	316	10/100
MNGLS52ESC	316	10/100
MNGLS52ESF	316	10/100
MNGLS70BCC	316	10/100
MNGLS70BCF	316	10/100
MNGLS70ESC	316	10/100
MNGLS70ESF	316	10/100
MNGU1040	315	20/200
MNR6342	316	10/100
MP38	319	24
MP38CL	306	20
MP38DB	319	12
MP38PERMF	306	16
MP38PF	306	16
MP2050	318	100
MP3880	319	24
MP38120	319	24
MPES34	322	40
MPES34B	322	50
MPES39B	306	20
MPES39BWP	306	20
MPES39G9	306	16
MPES40BL	308	6
MPES40GR	308	6
MPES40WH	308	6
MPES66-3W	322	20
MPES69	306	20
MPES69BVP	306	8
MPES69BWP	306	20
MPES69DIY	306	20
MPES69G9	306	16
MPES69G9SI	306	16
MPES69G9W	306	16
MPES69WWP	306	20
MPES700K35	305	10
MPES701	305	20
MPES760	308	6
MPES761	308	4
MQ1LC	318	50/500
MQ01SDP	318	20/120
MQ05C	318	50/500
MQ05C6P	318	20/80
MQ05DP	318	20/120
MQ275	292	20
MR20CX	313	12
MR20X	313	12
MR32CSG	313	20
MR32CX	313	12
MR32LX	313	20
MR32SG	313	20

Cat. No	Page No	Box/ Carton
MR32X	313	12
MR40CX	313	12
MR40X	315	12
MRN22	313	20
MRN22CX	313	12
MRN32	313	20
MRN32CX	313	12
MRN32LX	313	12
MRN32NX	313	12
MRN40	315	10
MRN40CX	315	12
MRN40NX	315	12
MRT5YA22	308	8
MRT5YA32	308	8
MRT5YA32IP	308	6
MRT5YA40	308	6
MS738/20LPBL	121	5
MS738/20LPWE	121	5
MS770/1GPOLPBL	123	1
MS770/1GPOLPWE	123	1
MS770/1LPBL	120	5
MS770/1LPWE	120	5
MS770/2GPOLPWE	123	1
MS770/2LPBL	120	5
MS770/2LPWE	120	5
MS770/3GPOLPWE	123	1
MS770/3LPBL	120	5
MS770/3LPWE	120	5
MS770/4GPOLPWE	123	1
MS770/4LPBL	120	5
MS770/4LPWE	120	5
MS770/5GPOLPWE	123	1
MS770/5LPBL	120	5
MS770/5LPWE	120	5
MS770/6GPOLPWE	123	1
MS770/6LPWE	120	5
MS777LPBL	121	1
MS777LPWE	121	5/50
MS777NSLPBL	121	5
MS777NSLPWE	121	1
MS777XLPBL	121	5
MS777XLPWE	121	5
MS788/2BL	124	1
MS788/2WE	124	1
MS788/4	124	1
MS788/15PLPWE	121	1
MS788LPBL	121	1
MS788LPWE	121	1
MS791/15LPBL	121	10/100
MS791/15LPWE	121	10/100
MS791LPBL	121	10/100
MS791LPWE	121	10/100
MS798	121	1
MS798BL	121	1
MS798EL30	121	1
MS798V	121	1
MS798VBL	121	1
MS798VEL30	121	1
MSL40C	307	1
MT10HGX	314	25/200
MT13HG	314	25
MT15HGX	314	25/200
MT18C	314	25
MT18CHGX	314	25
MT18CX	314	25
MT18D	314	25
MT18HG	314	25
MT18HGX	314	25
MT18LX	314	25
MT18NX	314	25
MT36C	314	25
MT36CX	314	25
MT36D	314	25
MT36N	314	25

Cat. No	Page No	Box/ Carton
MT36NX	314	25
MT37CHGX	314	25
MT37DHG	314	25
MT37DHGSP	314	25
MT37HG	314	25
MT37HGSP	314	25
MT37HGX	314	25
MT82T51X28	307	30
MTECOUG60T	320	10
MTECOUGAR60	320	100
MTECOUGAR60P	320	50
MTETRADE65	320	50
MU22	313	20
MXMUSHR60F	318	100
MXR6340ES	319	100
MXR6360ES	319	48
MXR8060ES	319	50
MXR8075ES	319	50
MXR80100ES	319	100
MXUP25BCC	319	50
MXUP25ESC	319	50
MXUP25SESC	319	5/50
N		
NCH770MWE	205	10/120
NL770/4MRED	205	10/120
NL770/4MWE	205	10/120
NL770ELV24WE	205	10/120
NL770MWE	205	10/120
NLC770/5MWE	205	10/120
NUF400M	306	1
NVAP16C	284	1
NVAP16I	284	1
NVAP16OW	284	1
NVAP16RS	284	1
NVBK6C	284	1
NVBK6I	284	1
NVP100AU	284	5
NVP100KAU	284	1
NVP200AU	284	5
NVP200K3AU	284	1
NVP200KAU	284	1
NWP4228	307	4
NX770ELV24WE	205	10/120
NX770MBL	205	10/120
NX770MWE	205	10/120
NXC770MWE	205	10/120
O		
P		
PE170/10	229	60
PE170/10	367	60
PE170R2	229	60
PE170R2	367	60
PRO660	282	1
PRO661	282	1
PRO662	282	1
PRO663	282	1
PS2USB	278	1
PS5USB	278	1
Q		
R		
R102WE	279	10/240
R105	273	10/50

Cat. No	Page No	Box/ Carton
R105/6	273	10/50
R105/6TWIN	273	5/20
R401B	270	50
R402B	270	50
R605/3	306	20
R605/4	306	12
R605/5	306	6
R605/6	306	6
R615	292	10
R620	291	1
R620LED	291	1
R621/4D	291	10/10
R621/6D	291	10/10
R621/6WA	291	10
R621/8A	290	4
R621/9A	290	4
R621D1	290	2
R621D2	290	2
R621D2DA	291	1
R622/1AC	292	1
R622/2AC	292	1
R622D2	292	2
R623/1000A	294	1
R1202	279	10/100
R2601	275	10/40
R2602	275	10/40
R2604	275	5/20
R2606	275	5/20
R2610	275	5/15
R2702	275	10/40
R2702EB	275	10/40
R2703	275	10/40
R2703EB	275	10/40
R2705	275	5/25
R2705EB	275	5/25
R2707	275	5/20
R2710	275	5/15
R2715	275	5/10
R2720	275	4/8
R2805	276	5
R2810	276	5
R2810L	276	5
R2810PBL	276	5
R2815	276	5
R2815GL	275	5
R2815L	276	5
R2820	276	5
R2820L	276	5
R2820PBL	276	5
R2825	276	5
R2825GL	275	5
R2825L	276	5
R2908/15	277	5
R2915/15CV	277	3
R2920	277	5
R2920/15CV	277	3
R2925/15CV	277	3
R2930	277	3
R2935	277	3
R5102/1	276	5/25
REPC410	274	9
REPC410USB	274	9
REPC415	274	9
REPC11015	274	9
RGL1	324	4
RGL3BL2P	324	6
RGL8	325	5/20
RGL9	325	5/20
RGL10	325	5
RGL11	325	6
RGL21	324	4
RGL22	324	4
RGL1215	324	6
RGLAPSP2	324	6

Cat. No	Page No	Box/ Carton
RGLBW2	324	16
RGLCL21/30	325	5
RGLCL33/30	325	5
RGLHSC15	325	10/20
RGLKMVBL4	324	4
RGLKRSLD4	325	1/6
RGLKRSLD24	325	6/24
RGLKRSLDBL4	325	6/24
RGLKSSM4	324	4
RGLKVSPBL4	324	6
RGLOSLD1	325	6/24
RGLPCTAW20	325	6
RGLSED2P	325	4/16
RGLSLMW4P	324	8
RGLSPBL1	324	6
RGLSPS1	324	6
RGLSSLD2	325	6/24
RGLSSP2	324	6
RGLSSW1	325	6/24
RGLSUP38	325	4
RGLTR60	325	8
RGLTR105	325	6
RGLTR220	325	4
RGLTR400	325	2
RGLVPLB	324	10/20
RGLVSBL	324	6
RGLVSPBL	324	10/20
RHH01	277	32/160
RJ6P4C3/1	210	20/240
RJ6P4C3/2	210	20/240
RJ8P8C5E/1	210	20/240
RJ8P8C5E/1YE	210	20/240
RJ8P8C5E/2	210	20/240
RJ8P8C6/1	210	20/240
RJ8P8C6/1BL	210	20/240
RJ8P8C6/2	210	20/240
S		
SQ770/0WE	227	20
SQ770/1PLWE	226	20
SQ770/2PLWE	226	20
SQ770/3PLWE	226	20
SQ770/4PLWE	226	20
SQ770/5PLWE	226	20
SQ770/6PLWE	226	20
SQ770/7PLWE	226	20
SQ770/9PLWE	226	20
SQ777SWE	224	5/100
SQ777WE	224	5/100
SQ777XWE	224	5/100
SQ787WE	222	10/200
SWFFC02	208	10/500
T		
TD170/1WE	219	3
TF770/1RCWE	219	3
TX770/1RCWE	219	3
TX770/2RCWE	219	3
U		
V		
V777/15WE	222	10/120
V777LKWE	222	10/120
V777SWE	222	10/120
V777WE	222	10/120
V777XWE	222	10/120
V787WE	222	10/200

Cat. No	Page No	Box/ Carton
W		
WMALCIT	320	4/40
WPADMS	110	1/10
WPADMS	146	1/10
WS38	230	2/72
WS38/15	230	2/72
WS38P	230	2/72
WS38R	230	2/72
WS40	230	5/60
WS40/15	230	5/60
WS44	74	30
WS44B	268	1/30
WS44S	74	30
WS53/1/15MG	230	40
WS53/1/15WE	230	40
WS53/1MG	230	40
WS53/1WE	230	40
WS53/1/XMG	230	40
WS53/2/15MG	230	40
WS53/2MG	230	40
WS53/2WE	230	40
WS53F/1/15MG	230	40
WS53F/1MG	230	40
WS53F/1WE	230	40
WS53F/2MG	230	40
WS53F/2WE	230	40
WS54/1MG	230	5/60
WS170	228	5/60
WS170/15	228	5/60
WS170/20	228	5/60
WS170/20KLI	229	5
WS170/20KLIO	229	5
WS170/20P	228	5/60
WS170/35	228	5/60
WS170/202	228	5/60
WS170KLI	229	5
WS170KLIO	229	5
WS170N	228	5/60
WS170P	228	5/60
WS170X	228	5/60
WS171/1	228	3/60
WS171/1/15	228	3/60
WS171/1/20	228	3/60
WS171/2	228	3/60
WS171/4	228	3/60
WS303/1F	321	10/200
X		
XL1FB	202	1
XL222/2TWE	195	1
XL222PA/2TWE	195	1
XL250LBL	182	3/108
XL250LWE	182	3/108
XL250TBL	181	3/108
XL250TWE	181	3/108
XL300FBL	182	3/64
XL300FWE	182	3/64
XL400LBL	182	3/108
XL400LCR	182	3/108
XL400LWE	182	3/108
XL400TBL	181	3/108
XL400TCR	181	3/108
XL400TWE	181	3/108
XL422PA/3TWE	195	1
XL475/2	182	3/64
XL632	185	3
XL650ETWE	182	3/64
XL700LWE	182	3/108
XL700TWE	181	3/108
XL770/0BL	198	10/160
XL770/0CR	198	10/160

Cat. No	Page No	Box/ Carton
XL770/0PLBL	200	10/120
XL770/0PLCR	200	10/120
XL770/0PLMS	200	10/120
XL770/0PLWE	200	10/120
XL770/0WE	198	10/160
XL770/1BL	180	10/160
XL770/1BLMS	180	10/160
XL770/1CR	180	10/160
XL770/1CXWE	195	10/160
XL770/1D1WE	198	10/160
XL770/1D2WE	198	10/160
XL770/1FCXWE	195	10/160
XL770/1GPLBL	197	10/160
XL770/1GPLCR	197	10/160
XL770/1GPLWE	197	10/160
XL770/1HBE	183	10/160
XL770/1HCR	183	10/160
XL770/1HWE	183	10/160
XL770/1KLIOWE	186	10
XL770/1KLOWE	186	10
XL770/1PLBL	199	10/320
XL770/1PLCR	199	10/320
XL770/1PLMS	199	10/320
XL770/1PLWE	199	10/320
XL770/1RJ1WE	195	10/160
XL770/1RJ2WE	195	10/160
XL770/1WE	180	10/160
XL770/1WEMS	180	10/160
XL770/2BL	180	10/160
XL770/2CR	180	10/160
XL770/2D1WE	198	10/160
XL770/2GPLBL	197	10/160
XL770/2GPLCR	197	10/160
XL770/2GPLWE	197	10/160
XL770/2HBE	183	10/160
XL770/2HCR	183	10/160
XL770/2HWE	183	10/160
XL770/2PLBL	199	10/320
XL770/2PLCR	199	10/320
XL770/2PLMS	199	10/320
XL770/2PLWE	199	10/320
XL770/2RJ1WE	195	10/160
XL770/2RJ2WE	195	10/160
XL770/2WE	180	10/160
XL770/3BL	180	10/160
XL770/3CR	180	10/160
XL770/3GPLBL	197	10/160
XL770/3GPLCR	197	10/160
XL770/3GPLWE	197	10/160
XL770/3HBE	183	10/160
XL770/3HWE	183	10/160
XL770/3PLBL	199	10/320
XL770/3PLCR	199	10/320
XL770/3PLMS	199	10/320
XL770/3PLWE	199	10/320
XL770/3WE	180	10/160
XL770/4BL	180	10/160
XL770/4CR	180	10/160
XL770/4GPLBL	197	10/160
XL770/4GPLCR	197	10/160
XL770/4GPLWE	197	10/160
XL770/4HWE	183	10/160
XL770/4PLBL	199	10/320
XL770/4PLCR	199	10/320
XL770/4PLMS	199	10/320
XL770/4PLWE	199	10/320
XL770/4WE	180	10/160
XL770/5BL	180	10/160
XL770/5CR	180	10/160
XL770/5GPLBL	197	10/160
XL770/5GPLCR	197	10/160
XL770/5GPLWE	197	10/160
XL770/5HWE	183	10/160
XL770/5PLBL	199	10/320

Cat. No	Page No	Box/ Carton
XL770/5PLCR	199	10/320
XL770/5PLWE	199	10/320
XL770/5WE	180	10/160
XL770/6BL	181	10/160
XL770/6CR	181	10/160
XL770/6GPLBL	197	10/160
XL770/6GPLCR	198	10/160
XL770/6GPLWE	197	10/160
XL770/6HWE	183	10/160
XL770/6PLBL	200	10/120
XL770/6PLCR	200	10/120
XL770/6PLWE	200	10/120
XL770/6WE	180	10/160
XL770EL10N1WE	183	10/100
XL770EL10N2WE	183	10/100
XL770EL10WE	183	10/100
XL770EL30WE	183	10/100
XL770FWE	195	10/160
XL770KM1WE	186	10
XL770KM2WE	186	10
XL770KM3WE	186	10
XL770KM7WE	186	10
XL770KM8WE	186	10
XL770KM9WE	186	10
XL770KT1WE	187	10
XL770KT2WE	187	10
XL770KT3WE	187	10
XL770KT4WE	187	10
XL770KT5WE	187	10
XL770KT6WE	187	10
XL770KT7WE	187	10
XL770KT8WE	187	10
XL770KT10WE	186	10
XL770KT11WE	186	10
XL770KT12WE	186	10
XL770KT13WE	186	10
XL770KT14WE	186	10
XL770KT15WE	186	10
XL770KT16WE	187	10
XL770THWE	184	3
XL770TOBL	195	10/160
XL770TOCR	195	10/160
XL770TOPLWE	202	10
XL770TOWE	195	10/160
XL770TWE	183	3
XL770UBL	198	10/160
XL770UWE	198	10/160
XL770VCKT1	186	10
XL770VCKT3	186	10
XL770VCKT4	186	10
XL770VCKT5	186	10
XL770VCKT6	186	10
XL770VCKT7	186	10
XL770VCKT8	186	10
XL770VCKT10	186	10
XL770VCKT12	186	10
XL770VCKT13	186	10
XL770VCKT14	186	10
XL770VCKT15	186	10
XL770VCKT16	186	10
XL777/15BL	191	10/120
XL777/15NSWE	191	10/120
XL777/15SWE	191	10/120
XL777/15WE	191	10/120
XL777/1015NSWE	191	10/120
XL777/1015WE	191	10/120
XL777BE	190	10/120
XL777BL	190	10/120
XL777BLMS	190	10/120
XL777BR	190	10/120
XL777CHWE	192	10/120
XL777CR	190	10/120
XL777EL10N2WE	191	2
XL777EL10N3RED	191	2

Cat. No	Page No	Box/ Carton
XL777EL10N3WE	191	2
XL777EL10NBE	191	2
XL777EL10NWE	191	2
XL777EL10RED	191	2
XL777EL10WE	191	2
XL777EL30/1015W	192	2/100
XL777EL30BL	191	2
XL777EL30CR	191	2
XL777EL30G1015W	192	2/100
XL777EL30GWE	192	2/100
XL777EL30N3WE	192	2/100
XL777EL30NWE	192	2/100
XL777EL30WE	191	2
XL777GR	190	10/120
XL777IDCLWE	192	10/120
XL777IDWE	192	10/120
XL777MG	190	10/120
XL777NSBL	190	10/120
XL777NSWE	190	10/120
XL777PA	192	2
XL777PLBL	201	20/320
XL777PLCR	201	20/320
XL777PLMS	201	20/320
XL777PLPB	201	20/320
XL777PLSS	201	20/320
XL777PLWE	201	20/320
XL777RBL	191	10/120
XL777RCR	191	10/120
XL777RED	190	10/120
XL777RSWE	191	10/120
XL777RWE	191	10/120
XL777SBL	190	10/120
XL777SCR	190	10/120
XL777SWE	190	10/120
XL777SWEMS	190	10/120
XL777USB2PSAWE	192	12
XL777USB2PSXWE	192	12
XL777WE	190	10/120
XL777WEMS	190	10/120
XL777X3NSWE	191	10/120
XL777X35OWE	191	10/120
XL777XBL	190	10/120
XL777XCHWE	192	10/120
XL777XCR	190	10/120
XL777XNSWE	190	10/120
XL777XPLBL	201	20/320
XL777XPLCR	201	20/320
XL777XPLMS	201	20/320
XL777XPLWE	201	20/320
XL777XSCR	190	10/120
XL777XSWE	190	10/120
XL777XWE	190	10/120
XL787/2XBL	188	10/160
XL787/2XCR	188	10/160
XL787/2XPLMS	201	20/320
XL787/2XWE	188	10/160
XL787/15BL	189	10/160
XL787/15CR	189	10/160
XL787/15NSWE	189	10/160
XL787/15SBL	189	10/160
XL787/15SWE	189	10/160
XL787/15WE	189	10/160
XL787/20BL	189	10/160
XL787/20NWE	189	10/160
XL787/20PLMS	201	20/320
XL787/20PLWE	201	20/320
XL787/20WE	189	10/160
XL787/25BL	189	10/160
XL787/25NWE	189	10/160
XL787/25WE	189	10/160
XL787/32WE	189	10/160
XL787BL	188	10/160
XL787CR	188	10/160
XL787IDCLBL	189	10/160

Cat. No	Page No	Box/ Carton
XL787IDCLWE	189	10/160
XL787IDWE	189	10/160
XL787NSBL	188	10/160
XL787NSWE	188	10/160
XL787PLBL	201	20/320
XL787PLCR	201	20/320
XL787PLMS	201	20/320
XL787PLWE	201	20/320
XL787PRWE	189	10/160
XL787PWE	189	10/160
XL787RBE	188	10/160
XL787RBL	188	10/160
XL787RCR	188	10/160
XL787RSWE	189	10/160
XL787RWE	188	10/160
XL787SBL	188	10/160
XL787SCR	188	10/160
XL787SWE	188	10/160
XL787WE	188	10/160
XL787X15WE	189	10/160
XL787XBL	188	10/160
XL787XCR	188	10/160
XL787XNSBE	188	10/160
XL787XNVWE	189	10/160
XL787XPLMS	201	20/320
XL787XPLWE	201	20/320
XL787XRWE	189	10/160
XL787XSWE	188	10/160
XL787XWE	188	10/160
XL792/0AWE	198	10/160
XL792/02ABL	198	10/160
XL792/02AWE	198	10/160
XL792/4BL	198	10/160
XL792/4WE	198	10/160
XL792B15WE	192	2/100
XL792BBL	192	2/100
XL792BCR	192	2/100
XL792BWE	192	2/100
XL792NSWE	192	2/100
XL798/0BL	194	1
XL798/0WE	194	1
XL798/777EL30WE	192	1
XL798/777WE	192	1
XL1000ERCWE	182	3/108
XL1000LWE	182	3/108
XL1000TWE	182	3/108
XL1036BL	181	10/160
XL1036NWE	181	10/160
XL1036PBL	181	10/160
XL1036PLMS	200	10/120
XL1036PLWE	200	10/120
XL1036PNWE	181	10/160
XL1036PWE	181	10/160
XL1036WE	181	10/160
XL2000ERCWE	182	3/108
XL7774BL	193	5/30
XL7774CR	193	5/30
XL7774PLWE	202	5
XL7774WE	192	5/30
XL7775/1WE	193	1
XL7775/2WE	193	1
XL7775WE	193	1
XLA770/1BL	184	10/160
XLA770/1CR	184	10/160
XLA770/1CXWE	195	10/160
XLA770/1GPLBL	198	20
XLA770/1GPLCR	198	20
XLA770/1GPLWE	198	20
XLA770/1PLBL	200	20
XLA770/1PLCR	200	20
XLA770/1PLWE	200	20
XLA770/1WE	184	10/160
XLA770/2BL	184	10/160
XLA770/2CR	184	10/160
XLA770/2GPLBL	198	20

Cat. No	Page No	Box/ Carton
XLA770/2GPLCR	198	20
XLA770/2GPLWE	198	20
XLA770/2PLBL	200	20
XLA770/2PLCR	200	20
XLA770/2PLWE	200	20
XLA770/2WE	184	10/160
XLA770/3BL	184	10/160
XLA770/3CR	184	10/160
XLA770/3GPLBL	198	20
XLA770/3GPLWE	198	20
XLA770/3PLBL	200	20
XLA770/3PLCR	200	20
XLA770/3PLWE	200	20
XLA770/3WE	184	10/160
XLA770/4BL	184	10/160
XLA770/4CR	184	10/160
XLA770/4GPLBL	198	20
XLA770/4GPLCR	198	20
XLA770/4GPLWE	198	20
XLA770/4PLBR	200	20
XLA770/4PLCR	200	20
XLA770/4PLWE	200	20
XLA770/4WE	184	10/160
XLDC	202	1
XLP250LWEWE	182	3/108
XLP250TWEWE	181	3/108
XLP300FWEWE	182	3/64
XLP400LWEWE	182	3/108
XLP400TWEWE	181	3/108
XLP475/2WEWE	182	3/64
XLP632WEWE	185	3
XLP700LWEWE	182	3/108
XLP700TWEWE	181	3/108
XLP770/0BLBL	198	10/160
XLP770/0PLBL	200	10/120
XLP770/0PLCR	200	10/120
XLP770/0PLWE	200	10/120
XLP770/0WEWE	198	10/160
XLP770/1BLBL	180	10/160
XLP770/1CRCR	180	10/160
XLP770/1CXWEWE	195	10/160
XLP770/1FCXWE	195	10/160
XLP770/1GPLBLBL	197	10/160
XLP770/1GPLCRCR	197	10/160
XLP770/1GPLWEWE	197	10/160
XLP770/1HWEWE	183	10/160
XLP770/1KLIOWEW	186	10
XLP770/1KLOWEWE	186	10
XLP770/1PLBL	199	10/320
XLP770/1PLCR	199	10/320
XLP770/1PLWE	199	10/320
XLP770/1RJ1WEWE	195	10/160
XLP770/1RJ2WEWE	195	10/160
XLP770/1WEWE	180	10/160
XLP770/2BLBL	180	10/160
XLP770/2CRCR	180	10/160
XLP770/2GPLBLBL	197	10/160
XLP770/2GPLCRCR	197	10/160
XLP770/2GPLWEWE	197	10/160
XLP770/2HWEWE	183	10/160
XLP770/2PLBL	199	10/320
XLP770/2PLCR	199	10/320
XLP770/2PLWE	199	10/320
XLP770/2WEWE	180	10/160
XLP770/3BLBL	180	10/160
XLP770/3CRCR	180	10/160
XLP770/3GPLBLBL	197	10/160
XLP770/3GPLCRCR	197	10/160
XLP770/3GPLWEWE	197	10/160
XLP770/3HWEWE	183	10/160
XLP770/3PLBL	199	10/320
XLP770/3PLCR	199	10/320
XLP770/3PLWE	199	10/320
XLP770/3WEWE	180	10/160
XLP770/4BLBL	180	10/160

Cat. No	Page No	Box/ Carton
XLP770/4CRCR	180	10/160
XLP770/4GPLBLBL	197	10/160
XLP770/4GPLCRCR	197	10/160
XLP770/4GPLWEWE	197	10/160
XLP770/4HWE	183	10/160
XLP770/4PLBL	199	10/320
XLP770/4PLCR	199	10/320
XLP770/4PLWE	199	10/320
XLP770/4WEWE	180	10/160
XLP770/5BLBL	180	10/160
XLP770/5CRCR	180	10/160
XLP770/5GPLBLBL	197	10/160
XLP770/5GPLCRCR	197	10/160
XLP770/5GPLWEWE	197	10/160
XLP770/5HWEWE	183	10/160
XLP770/5PLBL	199	10/320
XLP770/5PLCR	199	10/320
XLP770/5PLWE	199	10/320
XLP770/5WEWE	180	10/160
XLP770/6BLBL	181	10/160
XLP770/6CRCR	181	10/160
XLP770/6GPLBLBL	198	10/160
XLP770/6GPLCRCR	198	10/160
XLP770/6GPLWEWE	197	10/160
XLP770/6HWEWE	183	10/160
XLP770/6PLBL	200	10/120
XLP770/6PLCR	200	10/120
XLP770/6PLWE	200	10/120
XLP770/6WEWE	181	10/160
XLP770FWEWE	195	10/160
XLP770THWEWE	184	3
XLP770TOPLWE	202	10
XLP770TOWEWE	195	10/160
XLP770TWEWE	183	3
XLP770UWEWE	198	10/160
XLP777/15SWEWE	191	10/120
XLP777/15WEWE	191	10/120
XLP777/1015WEWE	191	10/120
XLP777BLBL	190	10/120
XLP777EL10WE	191	2
XLP777EL30/1015	192	2/100
XLP777EL30BLBL	191	2
XLP777EL30GWEWE	192	2/100
XLP777EL30WEWE	191	2
XLP777ESBLBL	190	10/120
XLP777ESWEWE	190	10/120
XLP777IDCLWEWE	192	10/120
XLP777P15WEWE	191	10/120
XLP777PAWEWE	192	2
XLP777PLBL	201	20/320
XLP777PLCR	201	20/320
XLP777PLWE	201	20/320
XLP777PWEWE	191	10/120
XLP777RWEWE	191	10/120
XLP777SBLBL	190	10/120
XLP777SWEWE	190	10/120
XLP777WEWE	190	10/120
XLP777X35OWEWE	191	10/120
XLP777XBLBL	190	10/120
XLP777XCRCR	190	10/120
XLP777XPLBL	201	20/320
XLP777XPLCR	201	20/320
XLP777XPLWE	201	20/320
XLP777XSBLBL	190	10/120
XLP777XSWEWE	190	10/120
XLP777XWEWE	190	10/120
XLP787/2XWEWE	188	10/160
XLP787/15SBLBL	189	10/160
XLP787/15SWEWE	189	10/160
XLP787/15WEWE	189	10/160
XLP787/20BLBL	189	10/160
XLP787/20PLWE	201	20/320
XLP787/20WEWE	189	10/160
XLP787/25BLBL	189	10/160
XLP787/25WEWE	189	10/160

Cat. No	Page No	Box/ Carton
XLP787BLBL	188	10/160
XLP787CRCR	188	10/160
XLP787IDCLWEWE	189	10/160
XLP787PLBL	201	20/320
XLP787PLCR	201	20/320
XLP787PLWE	201	20/320
XLP787RWEWE	188	10/160
XLP787SBLBL	188	10/160
XLP787SWEWE	188	10/160
XLP787WEWE	188	10/160
XLP787XBEBE	188	10/160
XLP787XCRCR	188	10/160
XLP787XPLBL	201	20/320
XLP787XPLCR	201	20/320
XLP787XPLWE	201	20/320
XLP787XSWEWE	188	10/160
XLP787XWEWE	188	10/160
XLP900AUDWEWE	196	5
XLP900USBWEWE	196	5
XLP900WEWE	196	5
XLP902WEWE	195	5
XLP903WEWE	195	5
XLP904/2WEWE	195	5
XLP904R2WEWE	196	5
XLP904R3WEWE	196	5
XLP904SVWEWE	196	5
XLP904USBWEWE	196	5
XLP904WEWE	196	5
XLP905WEWE	196	5
XLP906WEWE	195	5
XLP907/2WEWE	196	5
XLP907WEWE	196	5
XLP909WEWE	196	5
XLP910WEWE	196	5
XLP911WEWE	196	5
XLP912WEWE	185	5
XLP913WEWE	185	5
XLP914WEWE	185	5
XLP915WEWE	185	5
XLP917WEWE	185	5
XLP918WEWE	185	5
XLP919WEWE	185	5
XLP920WEWE	185	5
XLP921WEWE	185	5
XLP924WEWE	185	5
XLP925WEWE	185	5
XLP926WEWE	185	5
XLP927WEWE	185	5
XLP928WEWE	185	5
XLP930WEWE	196	5
XLP931WEWE	196	5
XLP932WEWE	196	5
XLP934WEWE	196	5
XLP935WEWE	196	5
XLP939WEWE	185	5
XLP940WEWE	185	5
XLP941WEWE	185	5
XLP943/2WEWE	196	5
XLP943WEWE	196	5
XLP945WEWE	196	5
XLP950WEWE	195	5
XLP1000ERCWEWE	182	3/108
XLP1000LWEWE	182	3/108
XLP1000TWEWE	182	3/108
XLP1036NWEWE	181	10/160
XLP1036PBLBL	181	10/160
XLP1036PLWE	200	10/120
XLP1036PWEWE	181	10/160
XLP1036WEWE	181	10/160
XLP2000ERCWEWE	182	3/108
XLP7774WEWE	192	5/30
XLPV777BEBE	194	10/120
XLPV777PLWE	202	10/120
XLPV777SBLBL	194	10/120
XLPV777SWEWE	194	10/120

Cat. No	Page No	Box/ Carton
XLPV777WEWE	194	10/120
XLPV777XSBLBL	194	10/120
XLPV777XSWEWE	194	10/120
XLPV787/2XSBLBL	193	10/160
XLPV787/2XSWEWE	193	10/160
XLPV787/2XWEWE	193	10/160
XLPV787/15SBLBL	193	10/160
XLPV787/15SWEWE	193	10/160
XLPV787SBLBL	193	10/160
XLPV787SWEWE	193	10/160
XLPV787WEWE	193	10/160
XLPV787XSWEWE	193	10/160
XLPW770H1WEWE	184	3
XLPW770H2WEWE	184	3
XLPW770V1WEWE	181	3/200
XLPW770V2WEWE	181	3/200
XLTC	202	1
XLTD770/1WE	183	3
XLTF770/1WE	183	3
XLTX770/1AWE	183	3
XLTX770/1NCWE	183	3
XLTX770/1WE	183	3
XLTX770/2AWE	183	3
XLTX770/2NCWE	183	3
XLTX770/2WE	183	3
XLTX770/3WE	183	3
XLV424/3WWE	195	1
XLV777BL	194	10/120
XLV777CR	194	10/120
XLV777PLMS	202	10/120
XLV777SBL	194	10/120
XLV777SCR	194	10/120
XLV777SWE	194	10/120
XLV777WE	194	10/120
XLV777XBL	194	10/120
XLV777XCR	194	10/120
XLV777XSCR	194	10/120
XLV777XSWE	194	10/120
XLV777XWE	194	10/120
XLV787/2XSWE	193	10/160
XLV787/2XWE	193	10/160
XLV787/15SWE	193	10/160
XLV787/15WE	193	10/160
XLV787BL	193	10/160
XLV787CR	193	10/160
XLV787SBL	193	10/160
XLV787SCR	193	10/160
XLV787SWE	193	10/160
XLV787WE	193	10/160
XLV787XBL	193	10/160
XLV787XSWE	193	10/160
XLV787XWE	193	10/160
XLW770H1BL	184	3
XLW770H1WE	184	3
XLW770H2BL	184	3
XLW770H2WE	184	3
XLW770V1BL	181	3/200
XLW770V1WE	181	3/200
XLW770V2BL	181	3/200
XLW770V2WE	181	3/200
Y		
Z		

Cat. No	Page No	Box/ Carton

Alphabetical list

A

Access control (hospitality)
- Excel ... 186-187
- Excel Life ... 142, 154
- Standard ... 221

Accessories – general mounting and wiring
- adaptors ... 28, 216, 169, 232, 279
- blanking plugs ... 232
- brackets ... 73, 140, 218, 264, 367
- cable clips ... 269
- clips ... 218, 264
- foam seals ... 232
- holesaws ... 232
- identification products ... 270
- insulated and earth connectors ... 270
- junction boxes ... 74, 268
- mounting blocks ... 266-268
- plastic shrouds ... 265
- screws ... 270
- supports ... 232
- terminal strips ... 75, 270
- wall boxes ... 140, 179, 218, 265

Adaptors
- double adaptors ... 279
- travel adaptors ... 279

Audio kit ... 284

Amplifier/player ... 284

Analogue time switches – programmable ... 32

Analogue timers ... 278

Angled plugs – Hypra ... 70-71

Antimicrobial – Excel Life Medical ... 175-179

Appliance inlet – Hypra ... 70

Aqua
- powerpoints ... 230
- switches ... 228-229

Architectural
- coverplates ... 124
- grid & plates ... 123
- mechanisms ... 122
- powerpoints ... 121
- shaver outlets ... 121
- switches ... 120

Architrave coverplates
- Excel ... 200
- Linea ... 135
- Standard ... 227

Architrave grid & plate
- Excel ... 198
- Excel Life ... 148

Architrave switches
- Excel ... 184
- Excel Life ... 142
- Linea ... 127
- Standard ... 220

Arteor
- 770 series ... 106-112
- automatic switches ... 117
- blank modules ... 114

Coverplates
- 770 series ... 112
- modular series ... 118-119
- dimmers ... 109
- electronic devices ... 217
- grids ... 157
- mechanisms ... 151
- modular series ... 118-119
- phone, TV, data & AV sockets ... 202
- powerpoints ... 124,136-139, 150-151, 201-202
- push-button mechanisms ... 109
- switches ... 131-135, 149, 199, 200
- USB chargers and sockets ... 107

Automatic switches
- Arteor ... 117
- Como ... 216
- Soliroc ... 231

Automatic lights – Excel ... 185

AXIOM System ... 328

B

Bathroom heaters ... 292
- replacement heat lamps ... 292
- replacement R80 LED centre Light ... 292

Bi-lock mechanisms – Excel Life ... 166

Blank inserts & adaptors – Como ... 216

Blanking plugs ... 232

Blank modules – Arteor ... 114

Brackets ... 73, 140, 218, 264, 367

Bridging combs – Viking™3 ... 90

Bunker lights ... 308

Bulkhead lights
- Aqua ... 365
- Excel ... 196
- Excel Life ... 153

Bulkhead LED ... 365

Bulkhead
- emergency luminaire ... 343
- commercial lighting ... 365

Busbars ... 23, 25, 28

Buzzers
- Arteor ... 117
- Como ... 217
- Excel ... 185
- Excel Life ... 153

C

CAB3 ... 78-84

Cable clips ... 269

Cable reels ... 277

Cable retainers – Excel Life ... 174

Cable ducting
- Lina 25 ... 76
- Transcab ... 76-77

Cable marking system
- CAB3 ... 78-84
- Memocab ... 85-87

Call indicator – Excel Life ... 153

Ceiling exhaust fans ... 290

Ceiling speakers ... 284

Ceiling sweep fans ... 293
- remote control kit ... 294
- light kits ... 294
- accessories ... 294

CFL lamps ... 310-311

Changeover switches ... 31

Child-safe powerboard ... 274

Chimes ... 285

Circuit breakers lock – TOGGLOCK ... 28

Coachlight ... 308

Combined outlets ... 214

Combined units
- for refrigerated containers ... 69

Commercial lighting
- LED panel ... 301
- T5 metal battens ... 359
- T8 metal battens ... 359-360
- WP2 LED battens ... 361-362
- WP2 T5 battens ... 362-363
- WP2 T8 battens ... 363-364
- Vortex LED highbay ... 361
- Oyster ... 360
- Bulkhead LED 365 & 360 ... 365

Como
- blank inserts & adaptors ... 216
- combined outlets ... 214
- coverplates ... 217
- dimmers ... 211-212
- fan controllers ... 212
- installation accessories ... 218
- mechanisms ... 215-217
- mounting brackets ... 218
- phone, TV, data and AV sockets ... 216
- powerpoints ... 213, 215
- shrouds ... 218
- stud brackets ... 218
- support frames ... 218
- switches ... 211-212, 216
- wall boxes ... 218

Compact RCBO's ... 26

Connection accessories
- busbars ... 28
- circuit breakers lock – TOGGLOCK ... 28
- entry terminal adaptors ... 28
- protection accessories ... 28

Consumer units ... 58-60

Contactors ... 31

Cord clamps – Excel Life ... 174

Cordline switches ... 187

Cord-pull ceiling switches – Standard ... 219

Coverplates
- Arteor ... 106-107, 112, 118, 119
- Como ... 217
- Excel ... 199-202
- Excel Life ... 149-151, 158-159, 179
- Linea ... 232
- Soliroc ... 199-202

Crimping tools Starfix™ ... 92

D

Digital timers ... 278

Digital time switches – programmable ... 32

Dimmers
- Arteor ... 109, 114
- Como ... 211-212
- Excel ... 181-182
- Excel Life ... 167
- Linea ... 125-126
- mechanisms ... 206-207
- Standard ... 220

Dimmer knobs
- Como ... 215
- Excel Life ... 174

DIN-rail equipment
- Compact RCBO's ... 26
- DX³ compact RCBO's ... 26
- isolating switches ... 24
- TX³ MCB's ... 23
- TX³ RCCB's ... 25

Distribution boards
- IP42 ... 61-62
- IP55 ... 63

Distribution cabinets and enclosures
- load centres ... 59
- Plexo³ ... 58

Door chimes
- wireless battery-operated ... 285
- wireless bell presses ... 285
- wireless plug-in ... 285

Door entry systems
- colour video and audio door entry kit ... 283

Double adaptors ... 279

Double powerpoint with dual USB charger
- Arteor ... 112
- Excel ... 192
- Excel Life ... 144, 145, 155

Downlights
- CFL ... 306
- extension plates ... 301
- halogen ... 305
- LED ... 300-301

Duct adaptor – ventilation ... 291

Duct with cover – cable ducting ... 76-77

Ducting – ventilation ... 291

DX³
compact RCBO's ... 26
isolating switch ... 24
RCBOs ... 27

E

E2 Edgelight exit sign ... 330
E3 Edgelight exit sign ... 329
Earth stud (node) – Excel Life Medical ... 178
EB Edgelight exit sign ... 331
Ehalogen lamps ... 315
Electronic devices
Arteor ... 117
Como ... 216-217
Excel Life ... 153
Electrozap insect killer ... 310
Emergency power packs and batteries ... 344
Emergency stop switches
Arteor ... 117
Como ... 217
Excel ... 185
Excel Life ... 153
Emergency testing systems ... 328
Emergency lighting
AXIOM emergency lighting systems ... 328
E2 Edgelight exit sign ... 330
E3 Edgelight exit sign ... 329
EB Edgelight exit sign ... 331
ER2 utility exit sign ... 334
G2 LED slide connect exit sign ... 333
Large exit sign ... 334-335
Securit exit sign ... 332-333
Test switch and circuit sensing module ... 328
Weatherproof exit sign ... 336
Emergency lighting luminaires
Satellite LED Series ... 338
twin spotlight ... 339
T5 metal battens ... 339
T8 metal battens ... 340
WP2 LED battens ... 341
WP2 T5 battens ... 342
WP2 T8 battens ... 342
Oyster ... 343
Bulkhead LED 360 ... 343
Emergency power packs and batteries ... 344
Enclosures
Load centre ... 59
Plexo³ ... 58
Engraved powerpoints – Excel Life Medical ... 176-177
Engraved switch mechanisms ... 108, 162-165
Entry terminal adaptors ... 28
Equipotential boxes – Excel Life Medical ... 179
ER2 utility exit sign ... 334
Excel
architrave switches ... 184
automatic lights ... 185
bulkhead lights ... 196
buzzers ... 185
coverplates ... 199-202
dimmers ... 181-182
emergency stop switches ... 185
fan controllers ... 182
grid & plates ... 197-198
heavy-duty rocker switches ... 181
hospitality ... 187
hotel room indicators ... 185
illuminated signs ... 185
keycard switches ... 186
keylock switches ... 186
keytag switches ... 186-187
movement sensor switches ... 185
no touch switches ... 185
paint blister ... 202
phone, TV, data & AV sockets ... 195-196
powerpoints ... 188-194
RCD protected switches ... 191
shaver outlets ... 194
shutter switches ... 185
skirting lights ... 185
switches ... 180-187
temperature control switches ... 185
time delay switches ... 183-184
USB chargers ... 192
Excel Life
accessories
blank modules ... 173
brackets ... 173
cable retainers ... 174
cord clamps ... 174
dimmer knobs ... 174
fan controller knobs ... 174
insert modules ... 173
key fob ... 174
mechanism retention kit ... 174
paint cover ... 174
panel adaptor ... 174
shrouds ... 174
common plate series
coverplates ... 158-159
bulkhead lights ... 153
electronic devices ... 153
grid & plates ... 157, 159
hospitality ... 154
keycard switches ... 154
key fob switches ... 154
mounting frame ... 157
no contact switches ... 153
outlets coverplates ... 158
phone, TV, data & AV sockets ... 152
powerpoints ... 155-156, 159
roller blinds control switches ... 153
sensor lights ... 153
shaver outlets ... 156
signal & bulkhead lights ... 153
skirting lights ... 153
switches ... 152-154
thermostat switches ... 153
time delay switches ... 153
weatherproof IP66 switches ... 152
dedicated plate series
coverplates ... 149-151
fan controllers ... 142
grid & plates ... 147
hospitality ... 142
instant heat controllers ... 142
keycard switches ... 142
Key fob switches ... 142
powerpoints ... 143-146
shaver outlets ... 146
switches ... 141-142
USB chargers ... 144
weatherproof IP66 switches ... 141-142
mechanisms
bi-locks ... 166
dimmers ... 167
double pole switches ... 161
engraved rockers ... 162-165
fan controllers ... 167
indicators ... 172
keylocks ... 166
keytags ... 166
phone, TV, data and AV sockets ... 168-170
powerpoints ... 166
push-buttons ... 160
remote controlled dimmers ... 167
rotary dimmers ... 167
rotary switches ... 161
spring return switches ... 161
surge protection ... 172
switches ... 160-165
time-delay push-buttons ... 166
USB chargers ... 170-171
medical
coverplates ... 179
earth stud (node) ... 178
engraved
powerpoints ... 176-177
equipotential boxes ... 179
grid & plates ... 178
panel adaptors ... 179
powerpoints ... 176-177
RCD plates ... 178
spring return switches ... 175
coverplates
gas outlet plastic ... 179
gas outlet stainless steel ... 179
plastic ... 179
stainless steel ... 179
switch mechanisms ... 178
switches ... 175, 178
wall boxes ... 179
secure plate series
coverplates ... 159
grid & plates ... 159
powerpoints ... 159
Extension leads
accessories ... 277
cable reels ... 277
heavy-duty ... 276
heavy-duty lead with inline RCD ... 276
household duty ... 275
External grilles – ventilation ... 291

F

Fan controllers
Como ... 211-212
Excel ... 182
Excel Life ... 142, 167
Linea ... 125-126
mechanisms ... 207
Standard ... 220
Fan controller knobs ... 174
Fans
bathroom ... 290-291
ceiling ... 290, 293
Fluorescent battens residential ... 307
Fluorescent bunker lights residential ... 308
Fluorescent oyster lights residential ... 308
Fluorescent T5 lamps ... 312
Fluorescent T8 lamps ... 313-315
Fluorescent wall lights ... 308
Flush mounting boxes – Soliroc ... 232
Ferrules – Starfix™
with insulating flange ... 91
refills and accessories ... 92
Floodlights outdoor
halogen ... 306
incandescent ... 306
LED ... 304
Fork type supply busbars ... 23, 25, 28

G

G2 LED Slide Connect exit sign ... 333
Garden lighting ... 324-325
Gas outlet coverplates
plastic ... 179
stainless steel ... 179
Grid
Arteor ... 111, 119
Excel Life ... 157
Grid & plates
Architectural ... 123
Excel ... 197-198
Excel Life ... 147-148, 157, 159
Excel Life Medical ... 178
Linea ... 130

H

Hotel room indicators
Excel ... 185
Hand dryer ... 294
Heavy-duty rocker switches
Excel ... 181
Standard ... 219
Home automation kits – MyHOME™ ... 282
Hospitality
Excel ... 186, 187
Excel Life ... 154, 142
Standard ... 221
Hypra
angled plugs IP44/IP55 ... 71
angled plugs IP66/IP67 ... 70
appliance inlet IP66/IP67 ... 70
appliance inlet refrigerated container ... 69
combination switched socket refrigerated container ... 69
MCB protected outlets IP66/IP67 ... 68
mobile socket refrigerated container ... 69

mobile sockets IP44/IP55 ... 73
mobile sockets IP66/IP67 ... 72
panel mount socket IP44/IP55 ... 73
panel mount socket IP66/IP67 ... 72
RCBO protected outlets IP66/IP67 ... 68
RCD protected outlets IP66/IP67 ... 68
refrigerated container units IP66/IP67 ... 69
straight plug refrigerated container ... 69
straight plugs IP44/IP55 ... 71
straight plugs IP66/IP67 ... 70
surface mount socket IP44/IP45 ... 73
surface mount socket IP66/IP67 ... 73
switched socket outlets IP66/IP67 ... 69

I

Identification products ... 270
Illuminated signs
Arteor ... 117
Como ... 217
Excel ... 185
In-ceiling speakers ... 284
In-wall speakers ... 284
Indicator mechanisms
Excel Life ... 172
Soliroc ... 231
IP56 weatherproof switches – Aqua ... 228
IP66 weatherproof switches – Excel Life ... 142
Industrial plastic boxes
IP55 plastic boxes ... 74
IP55 junction boxes ... 74
IP66 plastic boxes ... 75
Industrial luminaires ... 361
Industrial plugs and sockets - Hypra ... 68-73
Isolating switches
Aqua IP56 ... 228
DIN-rail equipment ... 23-27
Insert modules – Excel Life ... 173
Inserts for Multi & Esco range – Architectural ... 124
Instant heat controllers – Excel Life ... 142
Insulated and earth connectors ... 270
International travel adaptors ... 279

J

Junction boxes ... 74, 268

K

Keycard switches
Excel ... 186
Excel Life ... 154, 142
Keylock switch mechanisms
Aqua IP53 ... 229
Excel ... 186
Excel Life ... 166
mechanisms ... 206
Standard ... 221
Keyfob switches – Excel Life ... 142, 154
Key switch mechanisms – Soliroc ... 231
Keytag mechanisms
Excel ... 186-187
mechanisms ... 166
standard ... 221

L

Lamps
CFL ... 310-312
fluorescent ... 308, 312-315
ehalogen ... 315-316
halogen ... 316-318
tungsten halogen ... 318
incandescent ... 318-319
LED ... 309
Large exit sign ... 334-335
LED
bulkhead LED commercial ... 365
downlights ... 300
floodlights ... 304
lamps ... 309
luminess LED panel light ... 358
panel lights ... 301
starlights ... 303
step lights ... 303
striplights ... 303
WP2 battens LED commercial ... 361-362
wall lights ... 303
Vortex LED highbay commercial ... 361
Light sensitive switches
Aqua ... 229
lighting management ... 367
Soliroc ... 231
Lighting accessories ... 321
Lighting fixtures
bulkhead LED commercial ... 365
bunker lights ... 304, 308
CFL downlights ... 306
coachlights ... 308
downlights extension plates ... 301
fluorescent battens ... 307
fluorescent bunker lights ... 308
fluorescent oyster lights ... 308
fluorescent wall lights ... 308
halogen downlights ... 305
halogen floodlights ... 306
incandescent floodlights ... 306
LED downlights ... 300
LED floodlights ... 304
LED panel lights ... 301
LED starlights ... 303
LED step lights ... 303
LED striplights ... 303
LED wall lights ... 303
outdoor floodlights ... 306
oyster light commercial ... 360
T5 metal battens commercial ... 359
T5 Fluorescent battens ... 307
T8 Fluorescent battens ... 307
T8 metal battens commercial ... 359
Vortex LED highbay commercial ... 361
WP2 LED batten commercial ... 361-362
Lighting management
motion sensors ... 366-367
remote control ... 367
surface mount boxes ... 367
Linea
accessories ... 140
coverplates
architrave ... 135
powerpoints ... 136-139
switches ... 125-127
dimmers ... 125-126
fan controllers ... 125-126
grid & plates ... 130
mounting brackets ... 140
paint cover ... 140
phone, TV, data & AV sockets ... 129
powerpoints ... 128
push-buttons ... 125
shrouds ... 140
switches – architrave ... 127
switches ... 125-126
wall boxes ... 140
Load centre enclosures ... 59
Lina 25 cable ducting ... 78, 331
Low voltage surge protection ... 30
Luminess LED panel light ... 358

M

Marking system
CAB3 ... 78-84
Memocab ... 85-87
Main switches ... 29
MCBs
plug-in ... 29
TX³ ... 23
MCB protected outlets – Hypra IP66/67 ... 68
Mechanisms
Architectural ... 122
Arteor ... 108-110, 113-115
Como ... 215-217
Excel Life ... 160-167, 170-172
Excel Life Medical ... 178
Soliroc ... 231
Excel
cordline switches ... 187
dimmers ... 182
fan controllers ... 182
keytag switches ... 186
phone, TV, data and AV sockets ... 195
switches ... 180-187
mechanisms ... 203-209
Linea
dimmers ... 126
fan controllers ... 125
phone, TV, data and AV sockets ... 129
switches ... 125-127
Mechanism retention kit – Excel Life ... 159
Memocab marking system ... 85-87
Mobile sockets – Hypra ... 72-73
Mounting accessories
Accessories ... 270
Architectural ... 124
Como ... 218
Excel Life ... 173
Linea ... 140
Movement sensors
IP44 Sensors ... 322
IP66 Sensors ... 322
Multipanel coverplates – Excel Life ... 158
MyHOME™ home automation kits ... 282
Multiroom audio ... 284

N

Night light ... 321
No touch switches
Excel ... 185
Excel Life ... 153
NUVO® multiroom audio
accessories ... 284
audio kit ... 284
players/amplifiers ... 284
speakers ... 284

O

Oyster lights
residential ... 303, 308
commercial ... 360
Outdoor speakers ... 284

P

Panel adaptors
Excel Life ... 174
Excel Life Medical ... 179
Panel mount sockets – Hypra ... 72, 73
Passage detection ... 366
Phone, TV, data and AV sockets
Arteor ... 116
Como ... 214, 216
Excel ... 195-196
Excel Life ... 146, 169-170
Linea ... 129
mechanisms ... 208-210
Soliroc ... 232
Standard ... 225
Plastic coverplates – Excel Life Medical ... 179

Players/amplifiers 284
Plexo³ enclosures 58
Plug-in MCB's 29
Plug-in timers
analogue outdoor timers 278
analogue timers 278
digital timers 278
Plugs and sockets – Hypra industrial 68-73
Plug bases 271-272
Plug tops 271
Plugboss heavy-duty 274
Powerboards
child-safe 274
individual switched outlets 273
master switch 273
Plugboss heavy-duty 274
power adaptor 274
TV & AV 273
USB chargers 273
worksite portable powercentre 274
Worksite portable powercentre 274
Powerpoints
Architectural 121
Arteor 107
Aqua 230-231
Como 213
Excel 188-194
Excel Life 143-146, 155-156, 159
Excel medical 176-177
DIN-rail 29
Linea 128
Standard 222-224
Soliroc 231
Power terminal blocks – Viking™3 89
Prong type supply busbars 28
Push-buttons
Arteor 109, 113-114
Excel Life 160, 166-167
Linea 125
mechanisms 205
Soliroc 231

Q

R

RCD protected outlets – Hypra IP66/67 68
Refrigerated container units – Hypra IP66/67 69
RCD plates – Excel Life Medical 178
RCBO protected outlets – Hypra IP66/67 68
Rotary dimmers
Arteor 109
Como 211-212
Excel 181-182
Excel Life 167
Linea 125-126
mechanisms 206
Standard 220

S

Safety plugs 272
Satellite LED series 338
Securit exit sign 332-333
Sensors
IP44 movement sensors 322
IP66 movement sensors 322
Shaver outlets and sockets
Architectural 121
Excel 194, 192
Excel Life 146, 156
Shrouds
Excel 218
Excel Life 174
Linea 140
Skirting lights
Arteor 117
Como 216
Excel 185
Excel Life 153
Smoke alarm – photoelectric 322
Soliroc
coverplates 232
flush mounting boxes 232
mechanisms 231
phone, TV, data and AV sockets 232
powerpoints 231
switches 231
Speakers 284
Standard
coverplates 226-227
dimmers 220
fan controllers 220
hospitality 221
keylock switches 221
keytag switches 221
phone, TV, data and AV sockets 225
powerpoints 222-224
relay switches 219
switches 219-221
Starfix™ crimping tools and ferrules 92
Straight plugs – Hypra 70-71
Supply busbars 28
Surface mount socket – Hypra 73
Surge protection 172
Suspension rod kits 330, 333
Switches
Architectural 120,
Arteor 109
Aqua 228-229
Como 211
Excel 180-187
Excel Life 152-154
Excel Life Medical 175
Linea 125-127
mechanisms 206
Standard 219-221
Soliroc 231

T

T8 metal battens emergency 340
T8 fluorescent battens 307
T5 metal battens 359
T5 fluorescent battens 307
Time switches – programmable (DIN-rail mounting)
analogue time switches 32
astronomical 32
digital time switches 32
digital multifunction 32
Time delay switches
Arteor 117
Como 216
Excel 183-184
Excel Life 153
Standard 219
Soliroc 231
Timers
plug-in analogue outdoor timers 278, 325
plug-in analogue timers 278
plug-in digital timers 278
TOGGLOCK – circuit breaker lock 28
Transcab cable ducting 76, 77
Travel adaptors 279
TX³
RCCB's 25
MCB's 23

U

USB chargers
Arteor 107, 109-110
Excel 192
Excel Life 144-146, 152, 155, 170-171
mechanisms 208
mobile products 273, 278
powerboards 273
USB travel chargers 278

V

Ventilation
bathroom heaters 292
replacement heat lamps 292
replacement LED centre light 292
ceiling exhaust fans 290
ceiling sweep fans 293
ceiling sweep fans accessories 294
ceiling sweep fans light kits 294
ceiling sweep fans remote control kit 294
duct adaptor 291
ducting 291
exhaust fans 290-291
external grilles 291
hand dryer 294
time-delay module 2
vent cowl 291
wall exhaust fans 290
wall kits 291
window kits 291
Video and audio door entry kits 283
Viking™3
screw connection 88-89
accessories 90
Voltage surge protectors (DIN-rail mounting) 30
replacement plug-in modules 30
Vortex LED highbay 361

W

Wall boxes 140, 179, 218, 265
Wall exhaust fans 290
Wall kits – ventilation 291
Wall speakers 284
Weatherproof exit sign 336
Weatherproof IP56 switches – Aqua 228
Weatherproof IP66 switches – Excel Life 141, 152
Weatherproof LED battens 341-342
Wireless players 284

X

Y

Z

Conditions of sale

In accordance with its policy of continuous improvement the Company reserves the right to change specifications and designs without notice. All illustrations descriptions dimensions and weights in this catalogue are for guidance and cannot be held binding on the Company.
Prices are effective as of 1st of June 2017 and are subject to change without notice.

How to use this catalogue

Welcome to the 2017/2018 editon of the Legrand Trade Catalogue. This catalogue provides an overview of the wide range of products we offer that are designed to support your business, and has been divided in sections for quick and easy navigation.

Table of contents

Provides an outline of contents in each section. The coloured bars correspond to the colour of each catalogue section for easy navigation.

Alphabetical index

Contains a list of alphabetically listed general descriptions to find products easily.

Alphanumeric index

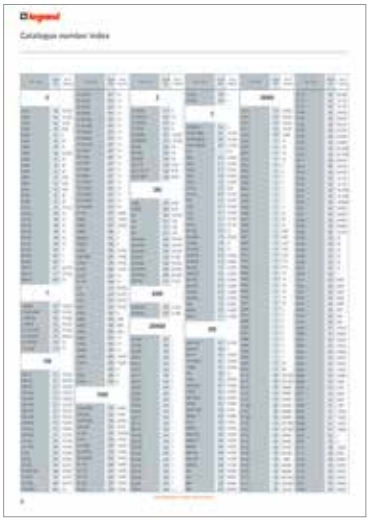

Contains an alphanumeric list of catalogue numbers, page numbers and quantities. The indexes start with numeric catalogue numbers then proceed to catalogue numbers with letters.

Section index

Found at the beginning of each section to provide a breakdown of product categories with page numbers.

Technical references

Contains technical information, specifications and drawings on selected products.

How to use this catalogue

Content pages

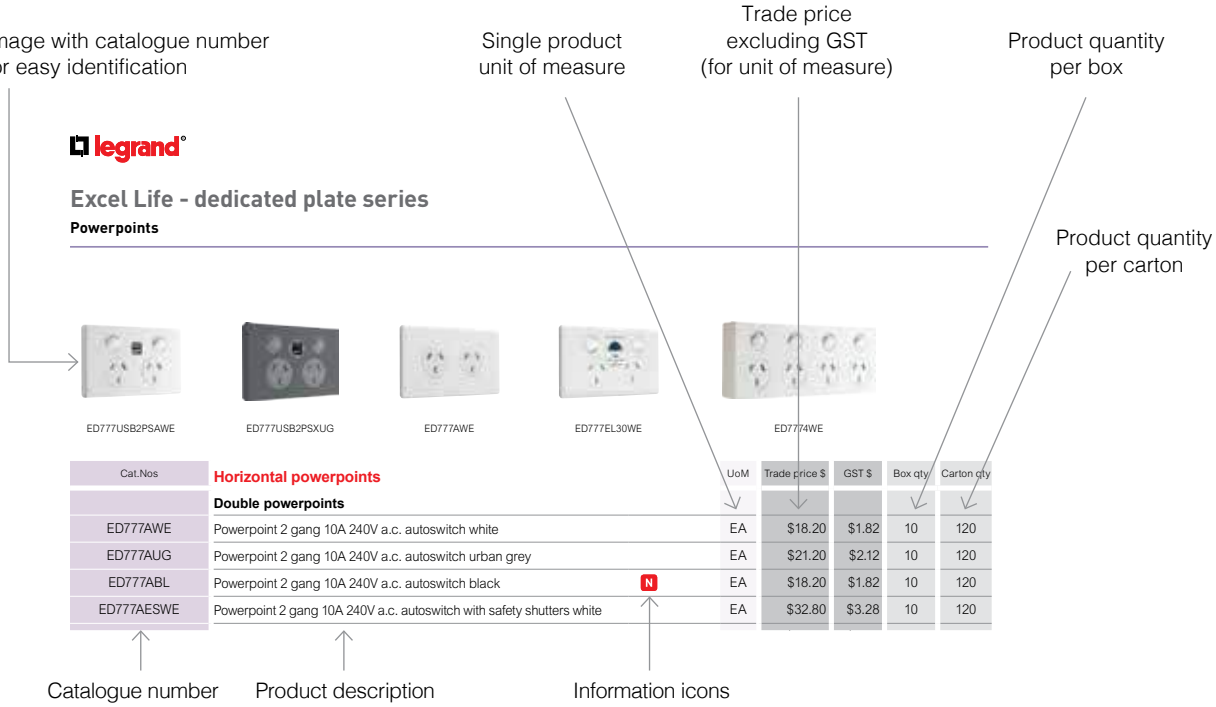

Ordering multiple quantities

Our products can be ordered individually per unit of measure. To help you increase efficiency in stock handling and storage, our products can also be ordered as a box or carton.

Individual packaging
e.g. ED777

Box (inner packaging)
e.g. ED777 QTY10

Carton (outer packaging)
e.g. ED777 QTY120

Information icons

The following icons appear adjacent to the product descriptions to highlight information about a particular product.

New product	Exciting new additions to our wide range of products
Energy Saving products	The Legrand team has identified these products as possibly contributing to energy savings
More info available	More information available in the Technical section
Coming soon	Exciting new products that will be added to the range after this catalogue is printed
Product to be discontinued	Advanced information that the product will be discontinued in the near future

MCBSs, RCCBs, RCBOs & DIN-RAIL EQUIPMENT

MCBs

P. 23
Single Pole
TX³ MCBs ≤ 63A
6kA prong and fork type busbar

Main Switches

P. 24
Single Pole
Isolating Switches
63A & 100A

RCCBs

P. 25
2 Pole
TX³ RCCBs ≤ 80A
AC and A type prong and fork type busbar

RCBOs

P. 26
Compact
RCBOs ≤ 32A
1P+N 6kA

Accessories

P. 28
Adaptors

Surface Mount Equipment

P. 29
DIN-rail
Mount Powerpoints

Voltage Surge Protectors and Control Devices

P. 30
Voltage
Surge Protectors

FEATURED PRODUCTS

TX³ MCBs ≤ 63A

6kA compatible with fork and prong type busbars
(p. 49)

Single Module RCBO

(p. 52)

P. 23
2 Pole
TX³ MCBs ≤ 63A
6kA prong and fork
type busbar

P. 23
3 Pole
TX³ MCBs ≤ 63A
6kA prong and fork
type busbar

P. 24
2 Pole
Isolating Switches
63A to 125A

P. 24
3 Pole
Isolating Switches
63A to 125A

P. 25
4 Pole
TX³ RCCBs ≤ 80A
AC and A type prong
and fork type busbar

P. 26
DX³ Compact
RCBOs ≤ 45A
1P+N 10kA

P. 27
DX³ RCBOs ≤ 63A
10kA AC and A type
prong and fork type busbar

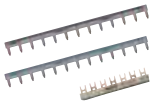
P. 28
Supply Busbars

P. 28
Locking Devices for
MCBs, RCCBs and RCBOs

P. 29
Plug-in MCBs

P. 29
Surface Mount
Main Switches

P. 31
CX³ Modular
Contactors

P. 31
Changeover
Switches

P. 32
Analogue
Time Switches

P. 32
Digital
Time Switches

Digital Time Switches
(p. 58)

Voltage Surge Protectors
(p. 56)

Circuit protection

Cross reference list old range (DX-E) Vs new ranges

MCB's

	Nominal Rating (A)	DX-E Old Cat No.	TX³ New Cat No.
Single Pole	6	03382	403430
	10	03384	403432
	16	03386	403434
	20	03387	403435
	25	03388	403436
	32	03389	403437
	40	03390	403438
	50	03391	403439
	63	03392	403440
2 Pole	6	03429	403524
	10	03431	403526
	16	03433	403528
	20	03434	403529
	25	03435	403530
	32	03436	403531
	40	03437	403532
	50	03438	403533
	63	03439	403534
3 pole	6	03447	403541
	10	03449	403543
	16	03451	403545
	20	03452	403546
	25	03453	403547
	32	03454	403548
	40	03455	403549
	50	03456	403550
	63	03457	403551

Isolating switches

	Nominal Rating (A)	DX-E Old Cat No.	DX³ New Cat No.
Single Pole	63	04310	406412
	100	04314	406423
2 Pole	63	04330	406441
	100	04334	606449
3 pole	63	04350	406461
	100	04354	406469

RCCB's

	Nominal Rating (A)	Type	Sensitivity	DX-E Old Cat No.	TX³ New Cat No.
2 pole	25	Type AC	30mA	08909	411509
	40	Type AC	30mA	08910	411510
	63	Type AC	30mA	08911	411511
	80	Type AC	30mA	08912	411512
	25	Type A	30mA	09056	411559
	40	Type A	30mA	09057	411560
	63	Type A	30mA	09058	411561
4 pole	25	Type AC	30mA	08993	411707
	40	Type AC	30mA	08994	411708
	63	Type AC	30mA	08995	411709
	80	Type AC	30mA	08996	411710

RCBO's

	Nominal Rating (A)	Type	Sensitivity	DX-E Old Cat No.	DX³ New Cat No.
2 Pole	6	Type AC	30mA	7883	410999
	10	Type AC	30mA	7884	411000
	16	Type AC	30mA	7886	411002
	20	Type AC	30mA	7887	411003
	25	Type AC	30mA	7888	411004
	32	Type AC	30mA	7889	411005
	40	Type AC	30mA	7890	411006
2 Pole	6	Type A	30mA	8579	411047
	10	Type A	30mA	8585	411048
	16	Type A	30mA	8587	411050
	20	Type A	30mA	8588	411051
	25	Type A	30mA	8589	411052
	32	Type A	30mA	8590	411053
	40	Type A	30mA	8591	411054

Compact RCBO's (one module)

	Nominal Rating (A)	Type	Sensitivity	DX-E Old Cat No.	DX³ New Cat No.
1 Pole	6	Type A	30mA	602780	411128
	10	Type A	30mA	602782	411129
	16	Type A	30mA	602783	411131
	20	Type A	30mA	602784	411132
	25	Type A	30mA	602785	411133
	32	Type A	30mA	602786	411134

N New product | ECO Energy Saving products | More info available. See technical pages | COMING SOON Coming soon | Product to be discontinued

Whilst most items are stock lines some products are made to order. UoM = Unit Of Measure.
Prices are effective 1 June 2017 and are subject to change without notice. Trade prices exclude GST.

DIN-rail equipment

MCBs

403434

403533

403549

Cat.Nos	TX³ MCB 6kA C curve - prong type & fork type busbars AS/NZS 60898-1	UoM	Trade price $	GST $	Box qty	Carton qty
	Single pole 230/400V a.c.					
403430	1P 6A 6kA 1 module	EA	$15.90	$1.59	10	100
403432	1P 10A 6kA 1 module	EA	$15.90	$1.59	10	100
403434	1P 16A 6kA 1 module	EA	$15.90	$1.59	10	100
403435	1P 20A 6kA 1 module	EA	$15.90	$1.59	10	100
403436	1P 25A 6kA 1 module	EA	$15.90	$1.59	10	100
403437	1P 32A 6kA 1 module	EA	$15.90	$1.59	10	100
403438	1P 40A 6kA 1 module	EA	$15.90	$1.59	10	100
403439	1P 50A 6kA 1 module	EA	$15.90	$1.59	10	100
403440	1P 63A 6kA 1 module	EA	$15.90	$1.59	10	100
	2 pole 230/400V a.c.					
403524	2P 6A 6kA 2 module	EA	$74.00	$7.40	5	50
403526	2P 10A 6kA 2 module	EA	$74.00	$7.40	5	50
403528	2P 16A 6kA 2 module	EA	$74.00	$7.40	5	50
403529	2P 20A 6kA 2 module	EA	$74.00	$7.40	5	50
403530	2P 25A 6kA 2 module	EA	$74.00	$7.40	5	50
403531	2P 32A 6kA 2 module	EA	$74.00	$7.40	5	50
403532	2P 40A 6kA 2 module	EA	$74.00	$7.40	5	50
403533	2P 50A 6kA 2 module	EA	$74.00	$7.40	5	50
403534	2P 63A 6kA 2 module	EA	$74.00	$7.40	5	50
	3 pole 230/400V a.c.					
403541	3P 6A 6kA 3 module	EA	$95.32	$9.53	-	20
403543	3P 10A 6kA 3 module	EA	$95.32	$9.53	-	20
403545	3P 16A 6kA 3 module	EA	$95.32	$9.53	-	20
403546	3P 20A 6kA 3 module	EA	$95.32	$9.53	-	20
403547	3P 25A 6kA 3 module	EA	$95.32	$9.53	-	20
403548	3P 32A 6kA 3 module	EA	$95.32	$9.53	-	20
403549	3P 40A 6kA 3 module	EA	$95.32	$9.53	-	20
403550	3P 50A 6kA 3 module	EA	$95.32	$9.53	-	20
403551	3P 63A 6kA 3 module	EA	$95.32	$9.53	-	20

N New product | ECO Energy Saving products | More info available. See technical pages | COMING SOON Coming soon | Product to be discontinued

Whilst most items are stock lines some products are made to order. UoM = Unit Of Measure.
Prices are effective 1 June 2017 and are subject to change without notice. Trade prices exclude GST.

DIN-rail equipment

Isolating switches

406412

406449

406469

Cat.Nos	Isolating switches AS/NZS 3947-3	UoM	Trade price $	GST $	Box qty	Carton qty
	Single pole - 250V a.c.					
406412	1P 63A 1 module	EA	$18.30	$1.83	10	100
406423	1P 100A 1 module	EA	$39.42	$3.94	10	100
	2 pole - 400V a.c.					
406432	2p 20A 1 module	EA	$39.89	$3.99	10	100
406441	2P 63A 2 module	EA	$69.51	$6.95	5	50
406449	2P 100A 2 module	EA	$105.54	$10.55	5	50
406450	2P 125A 2 module	EA	$126.00	$12.60	5	50
	3 pole - 400V a.c.					
406461	3P 63A 3 module	EA	$93.24	$9.32	-	36
406469	3P 100A 3 module	EA	$133.46	$13.35	-	36
406470	3P 125A 3 module	EA	$135.45	$13.54	-	36

N New product | ECO Energy Saving products | More info available. See technical pages | COMING SOON Coming soon | Product to be discontinued

Whilst most items are stock lines some products are made to order. UoM = Unit Of Measure.
Prices are effective 1 June 2017 and are subject to change without notice. Trade prices exclude GST.

DIN-rail equipment

RCCBs

411510

411709

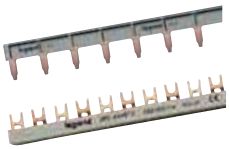

Cat.Nos	TX³ RCCB 2P - prong type & fork type busbars - AS/NZS 61008-1	UoM	Trade price $	GST $	Box qty	Carton qty
	AC type 30mA - 230V a.c.					
411509	2P 25A 30mA type AC 2 module	EA	$104.91	$10.49	-	24
411510	2P 40A 30mA type AC 2 module	EA	$117.98	$11.80	-	24
411511	2P 63A 30mA type AC 2 module	EA	$133.56	$13.36	-	24
411512	2P 80A 30mA type AC 2 module	EA	$162.98	$16.30	-	24
	A type 30mA - 230V a.c.					
411559	2P 25A 30mA type A 2 module	EA	$173.23	$17.32	-	24
411560	2P 40A 30mA type A 2 module	EA	$173.23	$17.32	-	24
411561	2P 63A 30mA type A 2 module	EA	$213.74	$21.37	-	24
411562	2P 80A 30mA type A 2 module	EA	$213.75	$21.38	-	24
	TX³ 4P - RCCB prong-type & fork-type busbars - AS/NZS 61008-1					
	AC type 30mA - 400V a.c.					
411707	4P 25A 30mA type AC 4 module	EA	$117.66	$11.77	-	12
411708	4P 40A 30mA type AC 4 module	EA	$128.05	$12.80	-	12
411709	4P 63A 30mA type AC 4 module	EA	$171.40	$17.14	-	12
411710	4P 80A 30mA type AC 4 module	EA	$179.85	$17.98	-	12
	A type 30mA - 400V a.c.					
411764	4P 25A 30mA type A 4 module	EA	$193.42	$19.34	-	12
411765	4P 40A 30mA type A 4 module	EA	$193.42	$19.34	-	12
411766	4P 63A 30mA type A 4 module	EA	$273.04	$27.30	-	12
411767	4P 80A 30mA type A 4 module	EA	$273.06	$27.31	-	12

DIN-rail equipment

Compact RCBOs

411131

602786

606410

606415

Cat.Nos	DX³ compact RCBO 1P+N 6kA-AS/NZ 61009-1	UoM	Trade price $	GST $	Box qty	Carton qty
	A type 30mA - 230V a.c - neutral disconnection					
411128	1P+N 6A 30mA type A 1 module N	EA	$82.08	$8.21	-	-
411129	1P+N 10A 30mA type A 1 module N	EA	$82.08	$8.21	-	-
411131	1P+N 16A 30mA type A 1 module N	EA	$82.08	$8.21	-	-
411132	1P+N 20A 30mA type A 1 module N	EA	$82.08	$8.21	-	-
411133	1P+N 25A 30mA type A 1 module N	EA	$82.08	$8.21	-	-
411134	1P+N 32A 30mA type A 1 module N	EA	$82.08	$8.21	-	-
	A type 10mA - 230V a.c - neutral disconnection					
411121	1P+N 6A 10mA type A 1 module N	EA	$102.50	$10.25	-	-
411122	1P+N 10A 10mA type A 1 module N	EA	$102.50	$10.25	-	-
411124	1P+N 16A 10mA type A 1 module N	EA	$102.50	$10.25	-	-
411125	1P+N 20A 10mA type A 1 module N	EA	$102.50	$10.25	-	-
411126	1P+N 25A 10mA type A 1 module N	EA	$102.50	$10.25	-	-
411127	1P+N 32A 10mA type A 1 module N	EA	$102.50	$10.25	-	-
	Compact RCBOs 1P+N 6kA - AS/NZ 61009-1					
	A type 30mA - 230V a.c.					
602780	1P+N 6A 30mA type A 1 module	EA	$82.08	$8.21	-	-
602782	1P+N 10A 30mA type A 1 module	EA	$82.08	$8.21	-	-
602783	1P+N 16A 30mA type A 1 module	EA	$82.08	$8.21	-	-
602784	1P+N 20A 30mA type A 1 module	EA	$82.08	$8.21	-	-
602785	1P+N 25A 30mA type A 1 module	EA	$82.08	$8.21	-	-
602786	1P+N 32A 30mA type A 1 module	EA	$82.08	$8.21	-	-
	DX³ compact RCBOs 1P+N 10kA - AS/NZ 61009-1					
	AC type 30mA - 230V a.c. with neutral lead					
606410	1P+N 10A 30mA type AC 1 module	EA	$380.40	$38.04	-	15
606411	1P+N 16A 30mA type AC 1 module	EA	$380.40	$38.04	-	15
606412	1P+N 20A 30mA type AC 1 module	EA	$380.40	$38.04	-	15
606413	1P+N 25A 30mA type AC 1 module	EA	$380.40	$38.04	-	15
606414	1P+N 32A 30mA type AC 1 module	EA	$380.40	$38.04	-	15
606415	1P+N 45A 30mA type AC 1 module	EA	$380.40	$38.04	-	15

N New product | ECO Energy Saving products | More info available. See technical pages | COMING SOON Coming soon | Product to be discontinued

Whilst most items are stock lines some products are made to order. UoM = Unit Of Measure.
Prices are effective 1 June 2017 and are subject to change without notice. Trade prices exclude GST.

DIN-rail equipment

RCBOs

411002

411050

411053

411189

Cat.Nos	DX³ RCBO 2P 10kA - AS/NZ 61009-1	UoM	Trade price $	GST $	Box qty	Carton qty
	AC Type 30mA 230V a.c. - neutral on right hand side					
410999	1P+N 6A 30mA type AC 2 module	EA	$149.14	$14.91	-	24
411000	1P+N 10A 30mA type AC 2 module	EA	$139.54	$13.95	-	24
411002	1P+N 16A 30mA type AC 2 module	EA	$139.54	$13.95	-	24
411003	1P+N 20A 30mA type AC 2 module	EA	$139.54	$13.95	-	24
411004	1P+N 25A 30mA type AC 2 module	EA	$139.54	$13.95	-	24
411005	1P+N 32A 30mA type AC 2 module	EA	$141.94	$14.19	-	24
411006	1P+N 40A 30mA type AC 2 module	EA	$144.06	$14.41	-	24
	A Type 30mA 230V a.c. - neutral on right hand side					
411047	1P+N 6A 30mA type A 2 module	EA	$233.77	$23.38	-	24
411048	1P+N 10A 30mA type A 2 module	EA	$233.77	$23.38	-	24
411050	1P+N 16A 30mA type A 2 module	EA	$233.77	$23.38	-	24
411051	1P+N 20A 30mA type A 2 module	EA	$233.77	$23.38	-	24
411052	1P+N 25A 30mA type A 2 module	EA	$233.77	$23.38	-	24
411053	1P+N 32A 30mA type A 2 module	EA	$233.77	$23.38	-	24
411054	1P+N 40A 30mA type A 2 module	EA	$233.77	$23.38	-	24

	DX³ RCBO 4P 10kA - AS/NZ 61009-1					
	AC Type 30mA 400V a.c. - neutral on right hand side					
411185	4P 10A 30mA type AC 4 module	EA	$373.73	$37.37	-	12
411186	4P 16A 30mA type AC 4 module	EA	$373.73	$37.37	-	12
411187	4P 20A 30mA type AC 4 module	EA	$373.73	$37.37	-	12
411188	4P 25A 30mA type AC 4 module	EA	$373.73	$37.37	-	12
411189	4P 32A 30mA type AC 4 module	EA	$373.73	$37.37	-	12
411190	4P 40A 30mA type AC 7 module	EA	$373.73	$37.37	-	12
411191	4P 50A 30mA type AC 7 module	EA	$392.73	$39.27	-	12
411192	4P 63A 30mA type AC 7 module	EA	$392.73	$39.27	-	12
	A Type 30mA 400Va.c - neutral on right hand side					
411233	4P 10A 30mA type A 4 module	EA	$462.42	$46.24	-	12
411234	4P 16A 30mA type A 4 module	EA	$462.42	$46.24	-	12
411235	4P 20A 30mA type A 4 module	EA	$462.42	$46.24	-	12
411236	4P 25A 30mA type A 4 module	EA	$462.42	$46.24	-	12
411237	4P 32A 30mA type A 4 module	EA	$462.42	$46.24	-	12

N New product | ECO Energy Saving products | More info available. See technical pages | COMING SOON Coming soon | Product to be discontinued

Whilst most items are stock lines some products are made to order. UoM = Unit Of Measure.
Prices are effective 1 June 2017 and are subject to change without notice. Trade prices exclude GST.

Connection accessories

Supply busbars and accessories

404905

404917

404926

MCBLOCK

Cat.Nos	Entry terminal adaptors	UoM	Trade price $	GST $	Box qty	Carton qty
404905	Entry terminals for 1P or P+N busbars cross-section 4-25mm² IP2X	EA	$17.65	$1.76	20	400
404906	Entry terminals for all phase busbars cross-section 6-35mm² IP2X	EA	$8.74	$0.87	20	400
	Fork type supply busbars					
404911	Busbar 1P for 12 devices 210mm(L) fork-type	EA	$15.03	$1.50	20	200
404912	Busbar 1P for 57 devices 1m(L) fork-type	EA	$51.59	$5.16	-	10
404914	Busbar 2P for 28 devices 1m(L) fork-type	EA	$156.09	$15.61	-	10
404917	Busbar 3P for 4 devices fork-type	EA	$10.64	$1.06	5	50
	Prong type supply busbars					
404926	Busbar 1P for 13 devices 227mm(L) 80A pin-type	EA	$10.64	$1.06	20	200
404937	Busbar 1P for 57 devices 1m(L) 80A pin-type	EA	$81.18	$8.12	-	10
404938	Busbar 2P for 6 devices 210mm(L) 63A	EA	$27.65	$2.76	-	50
404939	Busbar 2P for 28 devices 1m(L) 80A pin-type	EA	$138.30	$13.83	-	10
404940	Busbar 2P balanced on 3P for 6 devices 210mm(L) 63A with end protection	EA	$68.59	$6.86	3	30
404941	Busbar 2P balanced on 3P for 28 devices 1m(L) 80A with end protection	EA	$302.63	$30.26	-	10
404942	Busbar 3P for 4 devices 210mm(L) 63A pin-type	EA	$31.29	$3.13	-	40
404943	Busbar 3P for 19 devices 1m(L) 80A pin-type	EA	$179.60	$17.96	-	10
404944	Busbar 4P for 3 devices 210mm(L) 63A	EA	$63.33	$6.33	-	30
404945	Busbar 4P for 14 devices 1m(L) 80A	EA	$262.03	$26.20	-	10
	Protection accessories					
404988	Insulation for phase busbars 12 modules long	EA	$3.38	$0.34	20	200
404989	End cap insulation for 1P or P+N busbars	EA	$1.09	$0.11	40	2000
404990	End cap insulation for 2P 1m long and 3P busbars	EA	$2.37	$0.24	20	840
404991	End cap insulation for 4P busbars	EA	$2.37	$0.24	20	840
	Circuit breakers lock - TOGGLOCK					
MCBLOCK	Locking device for MCBs, RCCBs and RCBOs	EA	$54.38	$5.44	5	60
HMCBL	Label for MCBs, RCCBs and RCBOs (black on white background)	EA	$3.15	$0.32	-	450

N New product | ECO Energy Saving products | More info available. See technical pages | COMING SOON Coming soon | Product to be discontinued

Whilst most items are stock lines some products are made to order. UoM = Unit Of Measure.
Prices are effective 1 June 2017 and are subject to change without notice. Trade prices exclude GST.

Plug-in MCBs and main switches for surface mounting

DIN powerpoints, plug-in MCBs and main switches

787DIN

F380

B135

CDCB108

CDCB116

Cat.Nos	Powerpoints	UoM	Trade price $	GST $	Box qty	Carton qty
	Standard range powerpoints - 240V a.c.					
787DIN	Single socket DIN mount 10A 240V a.c. white	EA	$33.48	$3.35	10	200
787DIN15	Single socket DIN mount 15A 240V a.c. white	EA	$46.24	$4.62	10	-
	Plug in MCB 240V a.c.					
CDCB108	1P 8A 6kA 1 module	EA	$32.54	$3.25	5	60
CDCB116	1P 16A 6kA 1 module	EA	$32.54	$3.25	5	60
CDCB120	1P 20A 6kA 1 module	EA	$32.54	$3.25	5	60
CDCB132	1P 32A 6kA 1 module	EA	$32.54	$3.25	5	60
	Main switches - front wired					
	Single pole - 240V a.c.					
F180	Surface mount 1P 80A front entry	EA	$56.04	$5.60	10	12
	3 pole - 415V a.c.					
F380	Surface mount 3P 80A front entry	EA	$218.14	$21.81	5	12
	Main switches - back wired					
	Single pole - 240V a.c.					
B135	Surface mount 1P 35A back entry white	EA	$35.76	$3.58	10	12
B165	Surface mount 3P 65A back entry white	EA	$52.81	$5.28	10	12
B180	Surface mount 1P 80A back entry white	EA	$56.04	$5.60	10	12
	2 pole - 415V a.c.					
B280	Surface mount 2P 80A back entry white	EA	$175.99	$17.60	5	12
B335	Surface mount 3P 35A back entry white	EA	$116.35	$11.64	5	12
	3 pole - 415V a.c.					
B365	Surface mount 3P 65A back entry white	EA	$199.13	$19.91	5	12
B380	Surface mount 3P 80A back entry white	EA	$214.08	$21.41	5	12

N New product | ECO Energy Saving products | More info available. See technical pages | COMING SOON Coming soon | Product to be discontinued

Whilst most items are stock lines some products are made to order. UoM = Unit Of Measure.
Prices are effective 1 June 2017 and are subject to change without notice. Trade prices exclude GST.

Voltage surge protectors

Low voltage surge protector devices

412230

412275

412303

03934

Cat.Nos	Protection of main distribution boards	UoM	Trade price $	GST $	Box qty	Carton qty
	T1+T2 - Imax: 60kA/pole Up: 1.5kv Uc: 320V a.c.					
412270	1P without remote status monitoring - 1 module	EA	$255.78	$25.58	-	24
412272	3P with remote status monitoring - 3 module	EA	$583.74	$58.37	-	20
412274	1P+N with remote status monitoring - 2 module	EA	$369.71	$36.97	-	20
412275	3P+N with remote status monitoring - 4 module	EA	$696.79	$69.68	-	15
	Protection of sub distribution boards					
	T2 - Imax: 40kA/pole Up:2.1kv Uc: 440V a.c.					
412230	1P without remote status monitoring - 1 module	EA	$188.67	$18.87	-	24
412232	3P with remote status monitoring - 3 module	EA	$311.91	$31.19	-	20
412233	4P with remote status monitoring - 4 module	EA	$568.89	$56.89	-	15
	T2 - Imax: 20kA/pole Up:2.1kv Uc: 440V a.c.					
412220	1P without remote status monitoring - 1 module	EA	$125.13	$12.51	-	24
412224	1P+N without remote status monitoring - 2 module	EA	$228.03	$22.80	-	20
412225	3P+N without remote status monitoring - 4 module	EA	$500.59	$50.06	-	15
	Replacement plug-in modules					
	Replacement plug-in modules for SPDs T1+T2 and T2					
412303	For cat. nos 412270/72/74/75	EA	$30.02	$3.00	-	24
412301	For cat. nos 412230/32/33	EA	$17.96	$1.80	-	24
412297	For cat. nos 412220/24/25	EA	$11.96	$1.20	-	24
412398	N-PE modules for cat. nos 412224/25/26/27	EA	$33.75	$3.38	-	24
	Replacement plug-in modules for old SPDs					
03928	For cat nos 039 20/21/22/23	EA	$235.62	$23.56	5	20
03934	For cat nos 039 30/31/32/33	EA	$107.69	$10.77	5	20
03944	For cat nos 039 40/41/43	EA	$100.12	$10.01	5	20

*All SPDs must be protected by MCBs or any other protection device (refer to technical page 312). For proximity surge protection refer to technical page 312.

N New product | ECO Energy Saving products | More info available. See technical pages | COMING SOON Coming soon | Product to be discontinued

Whilst most items are stock lines some products are made to order. UoM = Unit Of Measure.
Prices are effective 1 June 2017 and are subject to change without notice. Trade prices exclude GST.

Control devices

CX³ modular contactors and changeover switch

412544

412545

412556

412900

Cat.Nos	CX³ modular contactors	UoM	Trade price $	GST $	Box qty	Carton qty
	1NO+1NC - 250V a.c.					
412521	1P 16A 1NO+1NC 230V a.c. coil low noise without handle 1 module	EA	$76.01	$7.60	4	48
	2NO+2NC - 400V a.c.					
412533	4P 25A 2NO+2NC 230V a.c. coil without handle 2 module	EA	$143.48	$14.35	-	24
	2NO - 250V a.c.					
412516	2P 63A 2NO 230V a.c. coil with handle 2 module	EA	$157.89	$15.79	-	24
412523	2P 25A 2NO 230V a.c. coil without handle 1 module	EA	$69.68	$6.97	-	24
412527	2P 63A 2NO 230V a.c. coil without handle 2 module	EA	$158.35	$15.84	-	24
412544	2P 25A 2NO 230V a.c. coil with handle 1 module	EA	$63.36	$6.34	-	24
412545	2P 40A 2NO 230V a.c. coil with handle 2 module	EA	$151.37	$15.14	-	24
412547	2P 63A 2NO 230V a.c. coil with handle 2 module	EA	$157.89	$15.79	-	24
412558	2P 25A 2NO 230V a.c. coil low noise with handle 1 module	EA	$69.68	$6.97	-	24
	2NC - 250V a.c.					
412524	2P 25A 2NC 230V a.c. coil without handle 2 module	EA	$87.41	$8.74	-	42
412548	2P 63A 2NC 230V a.c. coil with handle 2 module	EA	$157.89	$15.79	-	42
	3NO - 400V a.c.					
412549	3P 40A 3NO 230V a.c. coil with handle 3 module	EA	$173.29	$17.33	-	20
412550	3P 63A 3NO 230V a.c. coil with handle 3 module	EA	$181.00	$18.10	-	20
	4NO - 400V a.c.					
412561	4P 25A 4NO 230V a.c. coil low noise with handle 1 module	EA	$130.48	$13.05	-	24
412535	4P 25A 4NO 230V a.c. coil without handle 2 module	EA	$107.69	$10.77	-	24
412551	4P 25A 4NO 230V a.c. coil with handle 2 module	EA	$107.69	$10.77	-	24
412553	4P 40A 4NO 230V a.c. coil with handle 3 module	EA	$184.85	$18.48	-	24
412556	4P 63A 4NO 230V a.c. coil with handle 3 module	EA	$188.67	$18.87	-	24
	4NC - 400V a.c.					
412536	4P 25A 4NC 230V a.c. coil without handle 2 module	EA	$130.32	$13.03	-	24
412557	4P 63A 4NC 230V a.c. coil with handle 3 module	EA	$188.67	$18.87	-	24
	CX³ Changeover switch - 32A					
412900	Two-way 250V a.c. 32A (resistive load) 1 module	EA	$40.99	$4.10	10	100
412902	Two-way with centre point 250V a.c. 32A (resistive load) 1 module	EA	$30.60	$3.06	10	100
412903	Double two-way with centre point 400V a.c. 32A (resistive load) 2 module	EA	$65.44	$6.54	5	50

N New product | ECO Energy Saving products | More info available. See technical pages | COMING SOON Coming soon | Product to be discontinued

Whilst most items are stock lines some products are made to order. UoM = Unit Of Measure.
Prices are effective 1 June 2017 and are subject to change without notice. Trade prices exclude GST.

Control devices

Programmable time switches

649917

412795

04764

03705

412631

Cat.Nos	Analogue time switches	UoM	Trade price $	GST $	Box qty	Carton qty
	24 hour program					
49983	1 channel panel mount - no working reserve 15mn switch time 72x72mm	EA	$119.81	$11.98	-	30
649917	20A - no working reserve 4 time switch - 4TB with IP53 enclosure	EA	$168.14	$16.81	-	10
649914	20A - with 500 hours working reserve 4 time switch - 4QTB with IP53 enclosure	EA	$224.19	$22.42	-	10
49754	1 channel 5min ± /day with 100 hours working reserve	EA	$200.24	$20.02	-	30
	Daily program					
412780	Vertical 1 channel 5mn ±/day min. 15mn switch time 16A 1 mod	EA	$115.83	$11.58	-	100
412790	Vertical 1 channel 100hr reserve 5mn ±/day min. 15mn switch time 16A 1 mod	EA	$170.13	$17.01	-	100
412812	Horizontal 1 channel 5mn ±/day min. 15mn switch time 16A 3 mod	EA	$137.79	$13.78	-	30
412813	Horizontal 1 channel 100hr reserve 5mn ±/day min. 15mn switch time 16A 3 mod	EA	$202.04	$20.20	-	30
	Weekly program					
412794	Vertical 1 channel 100hr reserve 30mn ±/day min. 2hr switch time 16A 1 mod	EA	$164.70	$16.47	-	100
412795	Horizontal 1 channel 100hr reserve 30mn ±/day min. 2hr switch time 16A 3 mod	EA	$164.58	$16.46	-	30
	Digital time switches					
	Daily/weekly program					
03705	1 channel 240V a.c. 6yr reserve 16A 1 module	EA	$205.59	$20.56	-	30
603770	1 channel 240V a.c. 3yr reserve 16A 2 module	EA	$226.35	$22.64	-	30
603771	2 channels 240V a.c. 3yr reserve 16A 2 module	EA	$259.26	$25.93	-	30
	Multifunction time switches					
	Daily/weekly program					
412631	1 channel 250V a.c. 6yr reserve 16A multifunction 2 module	EA	$225.83	$22.58	-	30
412641	2 channels 250V a.c. 6yr reserve 16A multifunction 2 module	EA	$279.42	$27.94	-	30
412872	Programming transfer key (for Cat. Nos 412631/41)	EA	$34.45	$3.44	10	100
	Annual program					
412630	2 channels 230V a.c. 5yr reserve multifunction 28 programme 2 module	EA	$765.54	$76.55	-	30
04770	4 channels 230V a.c. 5yr reserve multifunction 28 programme 6 module	EA	$869.19	$86.92	12	120
	Astronomical time switches					
	For outdoor illuminations					
412654	1 channel 250V a.c. 16A 28 programme 2 module	EA	$306.21	$30.62	-	30
412657	2 channel 250V a.c. 16A 2x14 programme 2 module	EA	$321.52	$32.15	-	30

N New product | ECO Energy Saving products | More info available. See technical pages | Coming soon | Product to be discontinued

Whilst most items are stock lines some products are made to order. UoM = Unit Of Measure.
Prices are effective 1 June 2017 and are subject to change without notice. Trade prices exclude GST.

Independent unclipping

Preparation - connection

An MCB/RCCB may be replaced in the middle of a row supplied with busbars without disconnecting the other products.

1. Unscrew the terminals completely

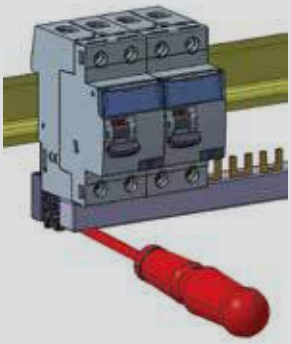

2. Put the clamp in the unlocking position with a screwdriver

3. Pull the device upward

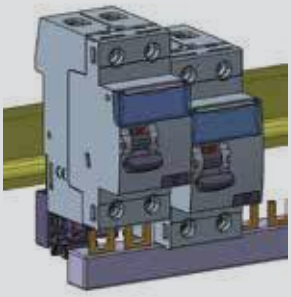

4. Pull the device downward in order to release it completely from the prongs of the busbar. Then pull the device forward

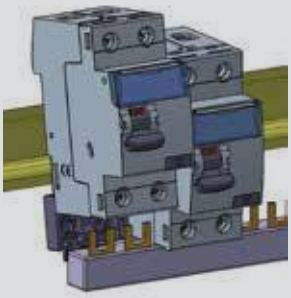

Connection

- Terminals protected against direct finger contact (IP20), wired device
- Cage terminals, with disengageable or captive screws
- Terminals fitted with flaps preventing a cable being placed under the terminal, with the terminal partly open or closed
- Alignment and spacing of the terminals permitting connection with the other products in the range via fork supply busbars

Technical characteristics - supply busbar

	Busbars types	Max number of devices connected	Length in number of 17.5mm modules	Cross section (mm²)	Permissible current: 1 central power supply point	Permissible current: 2 power supply point
Single pole or Single pole + neutral	1 row	13	13	16	80	100
	Meter	57	57			
Double pole	1 row	6	12	10	63	90
	Meter	28	56	16	80	100
Double pole balanced on 3 phases	1 row	6	12	10	63	90
	Meter	28	56	16	80	100
Triple pole	1 row	4	12	10	63	90
	Meter	19	57	16	80	100
Four pole	1 row	3	12	10	63	90
	Meter	14	56	16	80	100

TX³ MCB 6kA up to 63A

Cat no. 403430, 403432, 403434, 403435, 403436, 403437, 403438, 403439, 403440, 403524, 403526, 403528, 403529, 403530, 403531, 403532, 403533, 403534, 403541, 403543, 403545, 403546, 403547, 403548, 403549, 403550, 403551

403434

403549

Range

Polarity:

1P / 2P / 3P

Width:

1 module per pole. Each pole is 17.8mm

Rated currents, In:

6 / 10 / 16 / 20 / 25 / 32 / 40 / 50 / 63A

Magnetic tripping curves:

C Curve (between 5 and 10 In)

Limitation class: 3

Overall dimensions TX³ 6kA

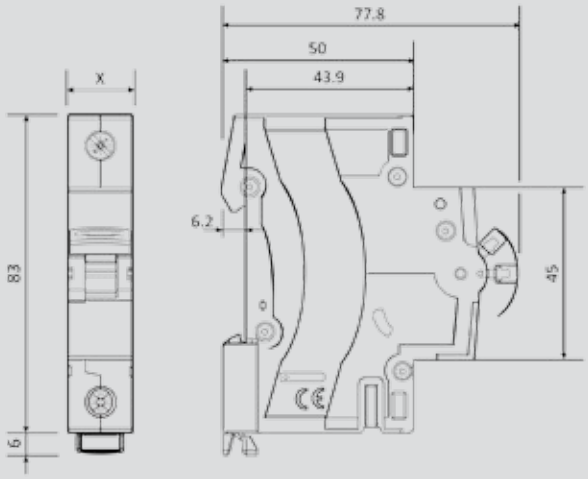

	X
1P	17.7mm
2P	35.4mm
3P	53.1mm

Preparation - connection

Terminal depth:

14mm

Stripping length recommended:

11mm

Screw head:

Mixed, slotted and Pozidriv 2.

Connectable section: **6kA**

		Cables	
		Without ferrule	With ferrule
In≤25A	**Rigid cable**	1 x 1.5mm² to 25mm²	-
	Flexible cable	1 x 1.5mm² to 16mm²	1 x 1.5mm² to 16mm²
In≤32A up to 63A	**Rigid cable**	1 x 1.5mm² to 35mm²	-
	Flexible cable	1 x 1.5mm² to 25mm²	1 x 1.5mm² to 25mm²

MCB tripping curves

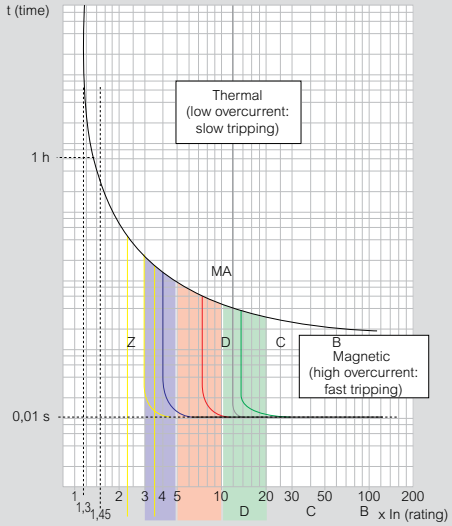

Thermal tripping for an ambient temperature 30°C
In = nominal current (rating) of MCB

Curves	Magnetic threshold settings
Z(1)	2.4 to 3.6In
B(1)	3 to 5In
C	5 to 10In
D(1)	10 to 14In (10 to 20 acc. to the stds)
MA(1)	12 to 14In

1: On request

Isolating switch DX³-IS 1 module per pole up to 125A

Cat no. 406412, 406423, 406441, 406449, 406450, 406461, 406469, 406470

Description - use

Isolating switch ensuring the breaking and the isolation of electrical circuits.
Fully visible breaking indication.

Range

Polarity and symbols:

1 pole 250V a.c.
63A
100A

2 poles 400V a.c.
63A
100A
125A

3 poles 400V a.c.
63A
100A
125A

Dimensions

Rated current 63 - 125A

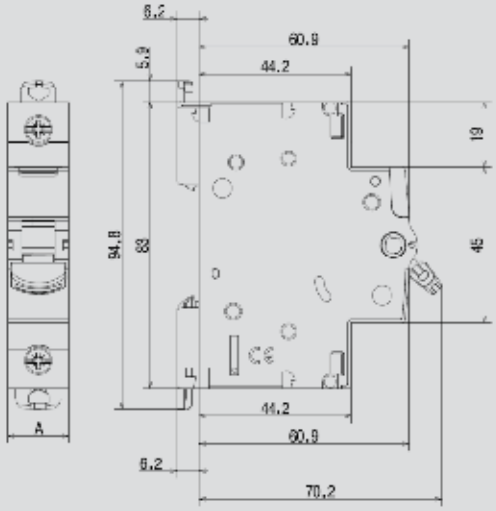

	1 pole	2 poles	3 poles
A	17.7	35.4	53.1

Preparation - connection

Power supply
Either from the top or the bottom

Locking possibility
Using MCBLOCK accessory

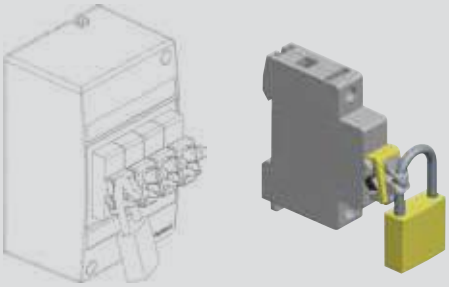

Rated operational voltage
1 pole:
Ue = 250V a.c.

2 poles and 3 poles
Ue = 400V a.c.

Rated frequency
50/60Hz with standard tolerances

Utilisation category
AC22: Mixed load
A: Frequent operations

TX³ RCCBs 2P up to 80A

Cat no. 411509, 411510, 411511, 411512, 411559, 411560, 411561, 411562

411510

Description - use

RCCBs with positive contact indication for control, protection and isolation of electrical circuits, protecting people from direct and indirect contact and protecting installations from insulation faults.

Range

Polarity:

2 pole

Width:

2 modules (2 x 17.8mm)

Nominal rating In:

16 / 25 / 40 / 63 / 80A

Residual current types:

- AC (sinusoidal differential alternating currents)
- A (residual currents with a DC component)

Sensitivity:

30mA

Nominal voltage and frequency:

230V a.c. / 240V a.c. 50Hz with standard tolerances

General characteristics

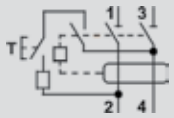

Performance of RCCBs

Average residual current performance curves

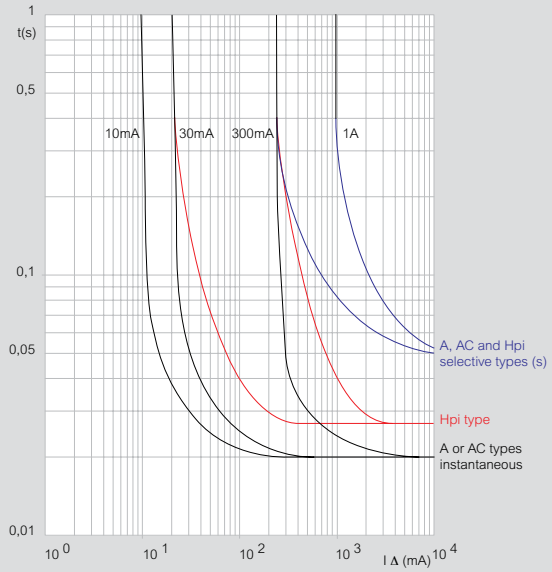

Overall dimensions

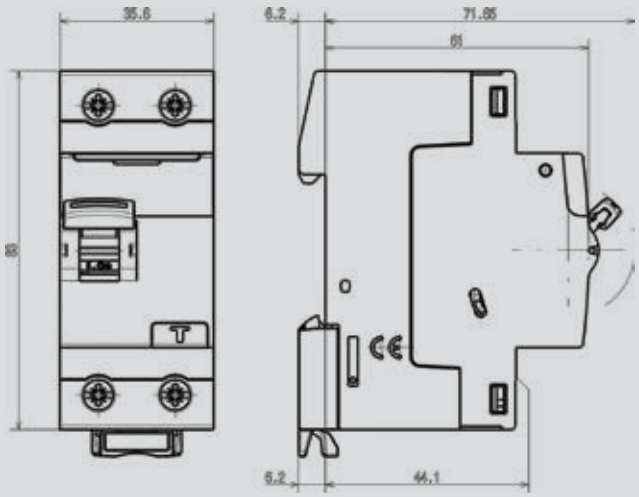

Preparation - connection

Power supply (line side):

From the top or the bottom

Connection:

Inputs and outputs via screw terminals
Neutral on right or left side

Terminal arrangement:

- Cage terminals, with disengageable and captive screws
- Terminals protected against direct finger contact IP20, wired device

Connection:

- Terminals protected against direct finger contact IP20, wired device
- Cage terminals, with disengageable or captive screws
- Terminals fitted with flaps preventing a cable being placed under the terminal, with the terminal partly open or closed
- Alignment and spacing of the terminals permitting connection with the other products in the range via fork supply busbars

Cables cross-section:

	Without ferrule	With ferrule
Rigid cable	1 x 0.75 to 50mm² or 2 x 0.75 to 16mm²	-
Flexible cable	1 x 0.75 to 35mm² or 2 x 0.75 to 16mm²	1 x 0.75 to 25mm²

Locking possibility:

Using MCBLOCK accessory

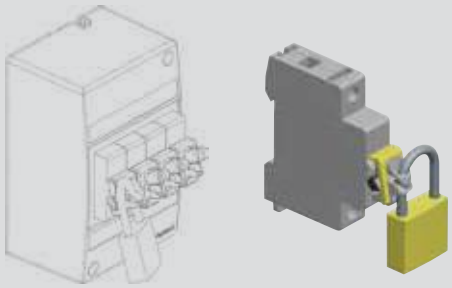

TX³ RCCBs 4P (N on right-hand side) up to 80A

Cat no. 411707, 411708, 411709, 411710, 411764, 411765, 411766, 411767

411709

Description - use

RCCBs with positive contact indication for control, protection and isolation of electrical circuits, protecting people from direct and indirect contact and protecting installations from insulation faults.

Range

Polarity:

4 pole

Width:

4 modules (4 x 17.8mm)

Nominal rating In:

25 / 40 / 63 / 80A

Residual current types:

- AC (sinusoidal differential alternating currents)
- A (residual currents with a DC component)

Sensitivity:

30mA

Nominal voltage and frequency:

400V a.c. 50Hz with standard tolerances

General characteristics

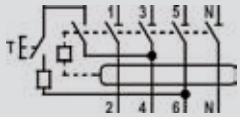

Performance of RCCBs

Average residual current performance curves

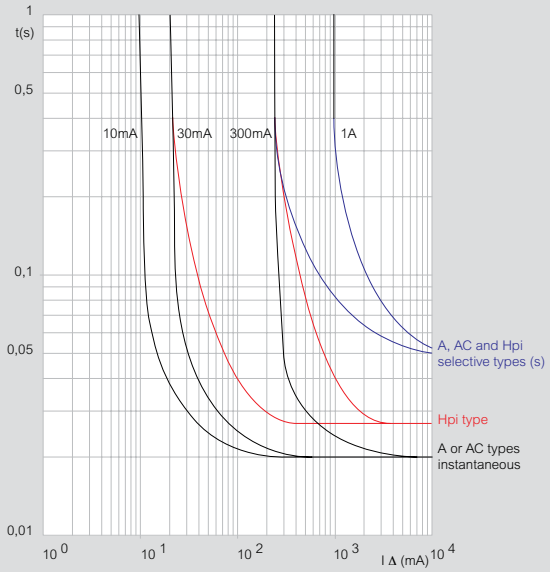

Overall dimensions

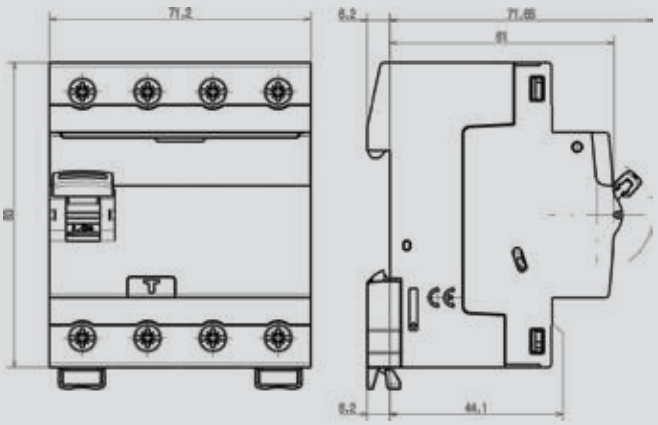

Preparation - connection

Power supply (line side):

From the top or the bottom

Connection:

- Inputs and outputs via screw terminals
- Neutral on right

Terminal arrangement:

- Cage terminals, with disengageable and captive screws
- Terminals protected against direct finger contact IP20, wired device

Connection:

- Terminals protected against direct finger contact IP20, wired device
- Cage terminals, with disengageable or captive screws
- Terminals fitted with flaps preventing a cable being placed under the terminal, with the terminal partly open or closed
- Alignment and spacing of the terminals permitting connection with the other products in the range via fork supply busbars

Cable cross-section:

	Without ferrule	With ferrule
Rigid cable	1 x 0.75 to 50mm² or 2 x 0.75 to 16mm²	-
Flexible cable	1 x 0.75 to 35mm² or 2 x 0.75 to 16mm²	1 x 0.75 to 25mm²

Locking possibility:

Using MCBLOCK accessory

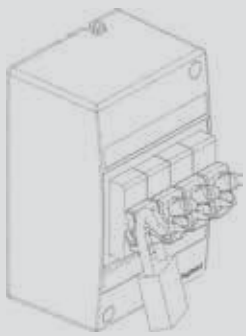

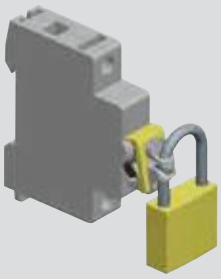

Compact R.C.B.O. 6000A (1P+N) 1 module

Cat no. 411121, 411122, 411124, 411125, 411126, 411127, 411128, 411129, 411131, 411133, 411134

Description - use

Residual Current Circuit Breaker with Overload (RCBO) with positive contact indication for control, protection against short-circuits and overloads, and isolation of electrical circuits, protecting people from direct and indirect contact and protecting installations from insulation faults.

Technology:

Electronic Residual Current Circuit Breaker voltage dependent
Thermal-magnetic circuit breaker
Limiting device
Trip-Free mechanism

Range

Polarity:

2 poles including 1 protected pole and 1 neutral pole (neutral switching)

Power supply:

Either from the top or the bottom

Rated currents (In):

6 / 10 / 16 / 20 / 25 / 32 A

Magnetic tripping curves:

C curve (between 5 and 10 In)

Type:

A

Sensitivity:

10 mA
30 mA

Rated voltage and frequency:

240 V ~, 50/60Hz with standard tolerances

Breaking capacity:

Icn = 6000 A in accordance with IEC 61009-1 standard

Marking on the upper panel:

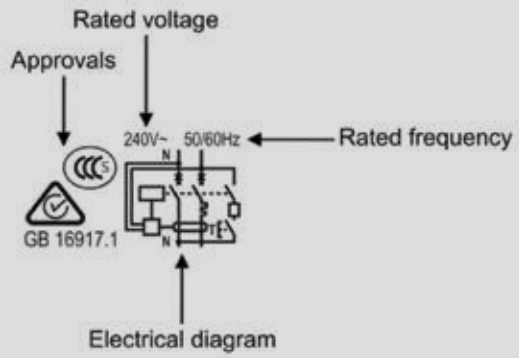

Overall dimensions

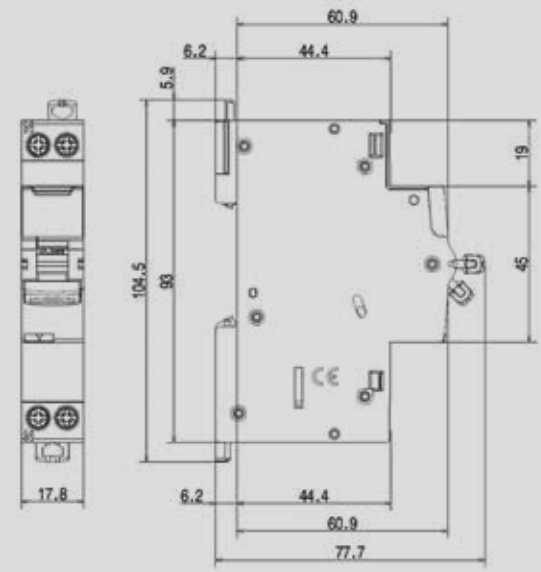

Module maintenance:

The RCBO may be replaced without disconnecting the other products.

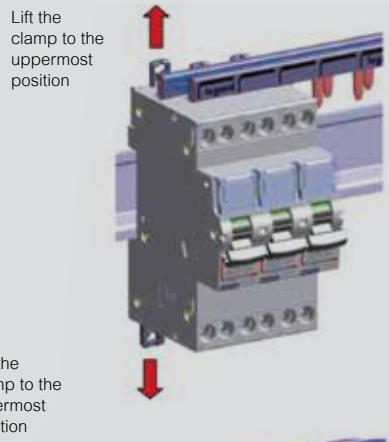

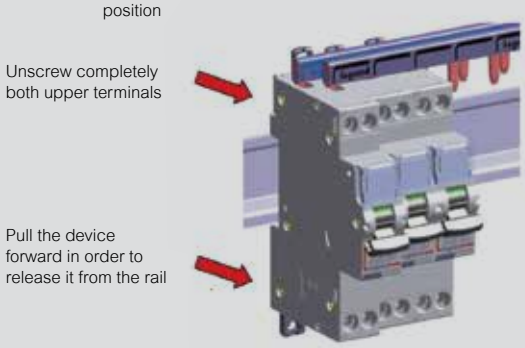

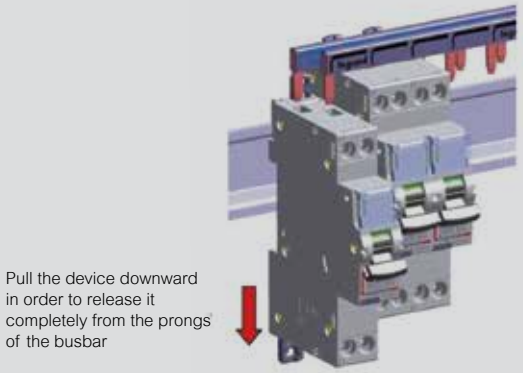

DX³ compact RCBO's 10kA (1P+N) 1 module

Cat no. 606410, 606411, 606412, 606413, 606414, 606415

606415

Description - use

R.C.B.O. with positive contact indication for control and protection of electrical circuits and protection of people against direct and indirect contacts and of installations against insulation faults.

Range

Rated breaking capacity:

10 000A according to AS/NZS 61009-1

Rated current:

10 / 16 / 20 / 25 / 32 / 45A

Magnetic tripping curves:

C (between 5 and 10In)

Type:

AC (Residual sinusoidal alternating current)

Sensitivity:

30mA

Nominal voltage and frequency:

240V a.c. 50/60Hz with standard tolerances

General characteristics

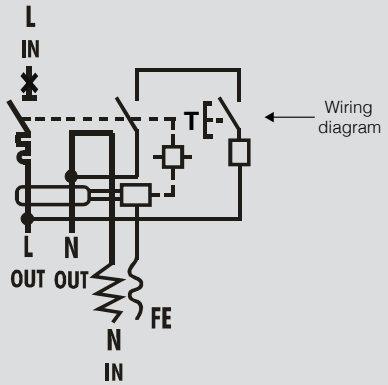

Overall dimensions

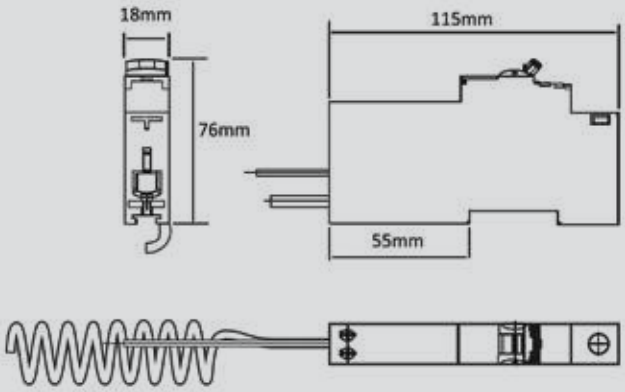

Preparation - connection

Connection:

- Terminals protected against direct finger contact (IP20)
- Terminals with release type, captive screw
- Terminal depth : upstream = 14mm and downstream = 14mm
- Screw head : mixed, slotted and Pozidriv n° 2
- Recommended tightening torque :
  - 2Nm upper side
  - 1.2Nm lower side

Cables cross-section:

		Without ferrule	With ferrule
Top terminals	**Rigid cable**	1 x 0.75 to 35mm² 2 x 0.75 to 16mm²	-
	Flexible cable	1 x 0.75 to 25mm² 2 x 0.75 to 10mm²	1 x 0.75 to 25mm²
Bottom terminals	**Rigid cable**	1 x 0.75 to 16mm² 2 x 0.75 to 6mm²	-
	Flexible cable	1 x 0.75 to 10mm² 2 x 0.75 to 4mm²	1 x 0.75 to 10mm²

Locking possibility:

Using MCBLOCK accessory

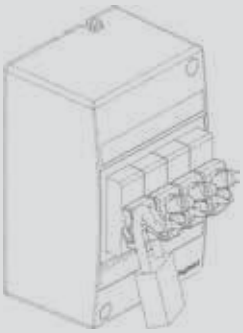

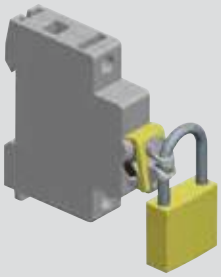

DX³ RCBO 2P/4P up to 63A

Cat no. 410999, 411000, 411002, 411003, 411004, 411005, 411006, 411047, 411048, 411050, 411051, 411052, 411053, 411054, 411185, 411186, 411187, 411188, 411189, 411190, 411191, 411192, 411233, 411234, 411235, 411236, 411237

411002

411236

Description - use

R.C.B.O. with positive contact indication for control and protection of electrical circuits and protection of people against direct and indirect contacts and of installations against insulation faults. Save space in distribution boards on both residential and commercial installation.

Range

Polarity:

2 pole / 4 pole

Width:

1 module per pole. Each module is 17.8mm

Nominal rating In:

6 / 10 / 16 / 20 / 25 / 32 / 40A

Residual current types:

- AC (sinusoidal differential alternating currents)
- A (residual currents with a DC component)

Sensitivity:

30mA

Nominal voltage and frequency:

230V a.c. / 240V a.c. 50Hz with standard tolerances

General characteristics

2 Pole

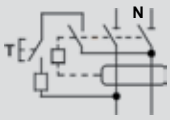

4 Pole

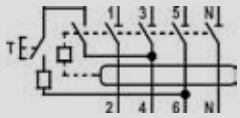

Overall dimensions

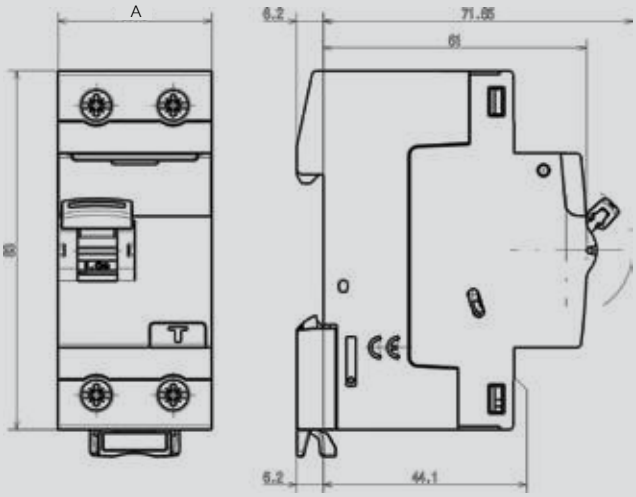

	2 poles	4 poles
A	35.8	71.2

Preparation - connection

Power supply (line side):

From the top or the bottom

Connection:

Inputs and outputs via screw terminals
Neutral on right hand side

Connection:

- Terminals protected against direct finger contact IP20, wired device
- Cage terminals, with disengageable or captive screws
- Terminals fitted with flaps preventing a cable being placed under the terminal, with the terminal partly open or closed
- Alignment and spacing of the terminals permitting connection with the other products in the range via fork supply busbars

Cables cross-section:

	Without ferrule	With ferrule
Rigid cable	1 x 0.75 to 50mm² or 2 x 0.75 to 16mm²	-
Flexible cable	1 x 0.75 to 35mm² or 2 x 0.75 to 16mm²	1 x 0.75 to 25mm²

Locking possibility:

Using MCBLOCK accessory

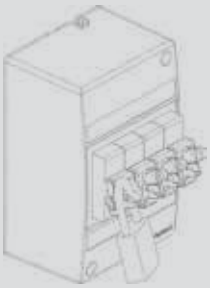

Surge protective devices (SPDs)

Cat no. 412220, 412224, 412225, 412230, 412232, 412233, 412270, 412272, 412274, 412275

Technical characteristics

Modular SPDs

230/400V a.c. power network (50/60Hz) - Degree of protection IP20
Operating temperature: -10 to +40°C / Storage temperature: -20 to +70°C

New cat nos.	Old cat nos.	Application	Type	Poles	Earthing system	Max voltage (Uc)	Protection mode	Nominal current In/pole (8/20)	Max. discharge current			Protection level		Max. short-circuit current Isc (Isccr)	Protective device to be used 1	FS auxiliary (remote status monitoring)
									Imax/ pole (8/20)	Iimp/pole (10/350)	I total (10/350)	Up (L-N/L-PE/N-PE)	Up at 5 kA			
412270	03920	Main distribution board	T1+T2	1P	TT, TNC, TNS	320V a.c.	CT1	25kA	60kA	12.5kA	12.5kA	1.5kV at 12.5kA 1.9kV at 25kA	1kV	50kA	TX³ 63A C curve	no
412272	03922		T1+T2	3P	TNC	320V a.c.	CT1	25kA	60kA	12.5kA	37.5kA					yes
412274	03921		T1+T2	1P+N	TT, TNS	320V a.c.	CT2	25/25kA	60kA	12.5/25kA	25kA	1.5/1.6/1.5kV at 12.5kA 1.9/2.1/1.5kV at 25kA	1kV			yes
412275	03923		T1+T2	3P+N	TT, TNS	320V a.c.	CT2	25/50kA	60kA	12.5/50kA	50kA					yes
412230	03930	Sub-Distribution board	T2	1P	TT, TNC, TNS, IT	440V a.c.	CT1	20kA	40kA			1.8kV at 15kA 2.1kV at 20kA	1.3kV	50kA	TX³ 25A C curve	no
412232	03932		T2	3P	TNC, IT	440V a.c.	CT1	20kA	40kA							yes
412233	03933		T2	4P	TT, TNS, IT	440V a.c.	CT1	20kA	40kA							yes
412220	03940		T2	1P	TT, TNS	320V a.c.	CT1	10kA	20kA			1.2kV at 5kA 1.4kV at 10kA	1.2kV	25kA	TX³ 20A C curve	no
412224	03941		T2	1P+N	TT, TNS	320V a.c.	CT2	10/20kA	20kA			1.2/1.4/1.4kV at 5kA 1.4/1.4/1.4kV at 10kA	1.2kV			no yes
412225	03943		T2	3P+N	TT, TNS	320V a.c.	CT2	10/20kA	20kA							no yes

CT1: L(N)-PE protection modes. CT2: L-N and N-PE protection modes.
1: MCB or similar type circuit breakers (with T2 and T1+T2 SPDs). For fuse protection or values other than those indicated in the table please consult Legrand. Cascading can be used for higher fault levels.

Installation

Associated overcurrent protection

SPDs must be protected by a circuit breaker (or fuses), to provide protection in the event of overcurrent, which may occur when the SPD reach its end of life. This protective device will be selected to coordinate or discriminate with upstream protective devices.

Connection principles

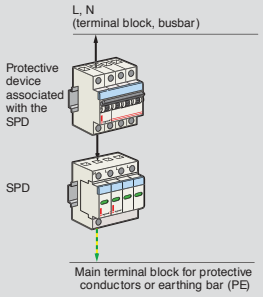

Connection lengths: as short as possible (< 50 cm if possible).
EMC (Electromagnetic Compatibility) rules: avoid loops, fix the cables firmly against the exposed metal conductive parts of the enclosure.

Coordinating upstream/downstream SPDs

Consists of ensuring that any downstream SPD (in distribution enclosures or proximity SPDs) is correctly coordinated in energy terms with any SPD located upstream (TS 61643-12).

Minimum distances between SPDs

Upstream SPD	Downstream SPD	Min. distance (m)
T1/50 and T1/25	T2/40	10
T1/12.5 and T1/8	T2/40	6
	T2/20, T2/12	8
T2/40	T2/20	4
	T2/12	6
T2/20 and T2/12	Proximity SPD	2

RJ11 and TV/AV powerboard protection

Cat no.	D105TVAV4BL	D105TVAV6BL	D105TVAV8BL
Colour	Black		
No. of outlets	4	6	8
Nominal input voltage	230-240V a.c. 50Hz		
Total loading	10A 2400W		
Clamping voltage	775V a.c.		
Surge protection	875 Joules	2800 Joules	3150 Joules
Cord length	2m	3m	3m
Master switch	Yes		
F Connectors (surge protected)	2 (1 in 1 out)	4 (2 in 2 out)	4 (2 in 2 out)
RJ 11 (surge protected)	No		2 (1 in 1 out)
RFI filter	Yes		
Warranty	3 year		

CX³ modular contactors 16A and 25A with or without handle and silent with handle

Cat no. 412521, 412523, 412524, 412533, 412535, 412536, 412544, 412551, 412558, 412561

412523

412535

412544

Range

Conventional thermal current:

Ith = 16 and 25A

Types of contact:

"NO" contact

"NC" contact

"NO + NC" mixed contact

Polarities:

2P in 1 module (17.8mm)
"2NO"
"2NC"
"NO+NC"

4P in 2 modules (35.6mm)
"4NO"
"4NC"
"2NO + 2NC"
"3NO + 1 NC"

Nominal voltage of the power circuit:

Un = 250V a.c. / 400V a.c.

Nominal voltage of the power circuit:

24V a.c. and 230V a.c.

General characteristics

Rated operating current depending on the category of use (Ie):

- AC7a or AC1 (heating): Ie = 16A or 25A depending on the catalogue numbers
- AC7b or AC3 (motor control): Ie = 10A (2.2kW for 2NO and 4kW for 4NO) for the 25A contactors and Ie = 6.5A for the 16A contactors

Rated operating voltage (Ue):

- Ue = 250V a.c. for 1 or 2P
- Ue = 400V a.c. for 3 or 4P

Dimensions

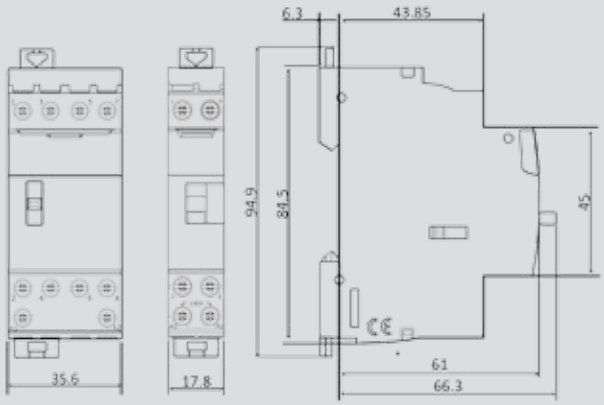

Positioning - connection

Examples of schematic diagrams:

"2 NO" contactor

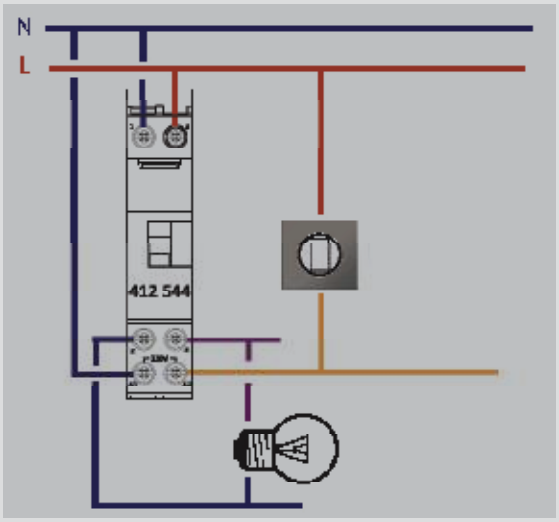

CX³ modular contactors 16A and 25A with or without handle and silent with handle

Cat no. 412521, 412523, 412524, 412533, 412535, 412536, 412544, 412551, 412558, 412561

Positioning - connection

"4NO used as a 3NO" contactor

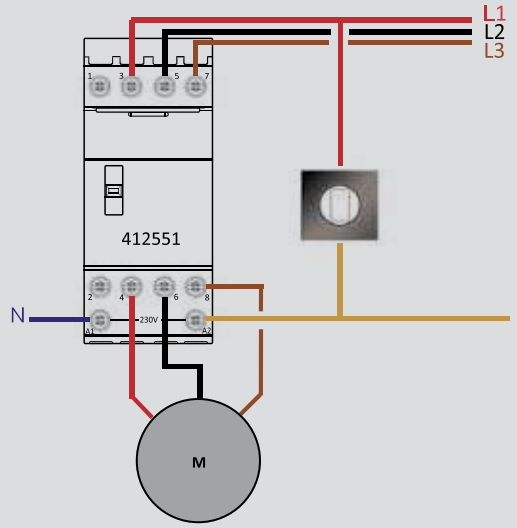

"4NO" contactor

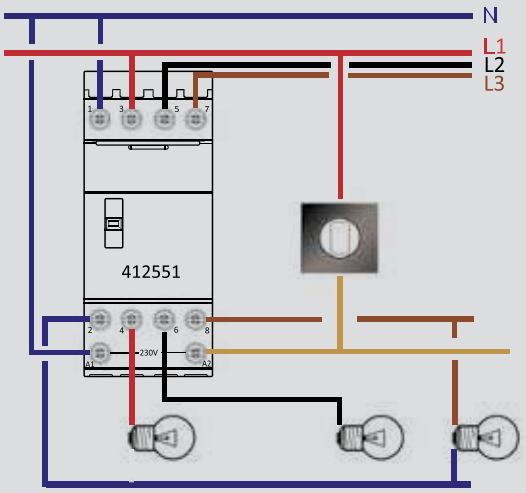

Connection:

- Screw control and power terminals:
  - Type of terminal: caged
  - Depth: 12mm
  - Capacity: 4.7 H x 4.7mm W
  - Compatible copper conductors

Rigid: 1 x (0.75 to 6mm²) or 2 x (0.75 to 2.5mm²)
Flexible without gland: 1 x (0.75 to 6mm²) or 2 x (0.75 to 2.5mm²)
Flexible with single gland: 1 x (0.75 to 6mm²)
Flexible with double gland: 2 x (0.75 to 4mm²)

- Screw head: mixed head Pozidriv no. 1 and 4mm blade
- Screw head: mixed M3.5
- Min. tightening torque: 0.5Nm/max.: 1.2Nm recommended: 0.8Nm

Length of control lines:

- With 24V contactor: 330m for 1 module contactor or 100m for 2 module contactor with 1.5mm² cables
- With 230V contactor: 250m for 1 module contactor or 400m for 2 module contactor regardless of the connection cable cross section.

Control status display:

- Via orange indicator showing the presence of the control signal or the forced switch-on status
- The handle position defines the way the contactor works:
  "I" position: Forced switch on/ON
  "O" position: Forced switch off/OFF
  "Auto" position: Automatic (the contact status depends on the electrical control)

CX³ modular contactors 40A and 63A with or without handle

Cat no. 412516, 412527, 412545, 412547, 412548, 412549, 412550, 412553, 412556, 412557

412556

Range

Conventional thermal current:

Ith = 40 and 63A

Types of contact:

"NO" normally open contact

"NC" normally closed contact

Polarities:

Double pole in 2 module (2 x 17.8mm = 35.6mm)
"2NO"
"2NC"

Four pole in 3 modules (3 x 17.8mm = 53.4mm)
"3NO"
"4NO"
"4NC"
"3NO + 1 NC"

Rated voltage (power contacts):

Un = 250V / 400V a.c.

Rated frequency, power and control:

50/60Hz

Dimensions

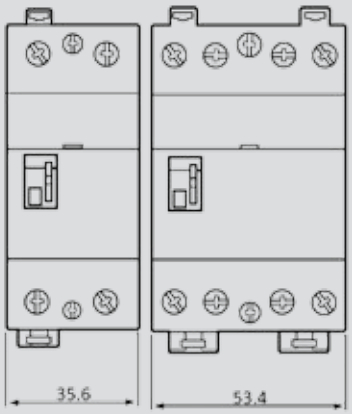

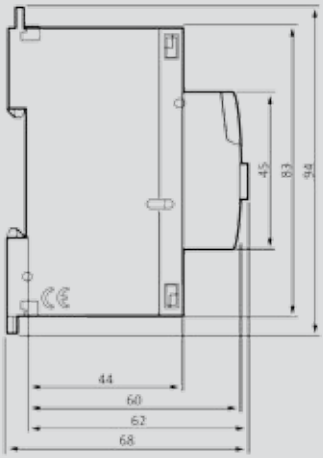

Modular changeover switches

Cat no. 412900, 412902, 412903

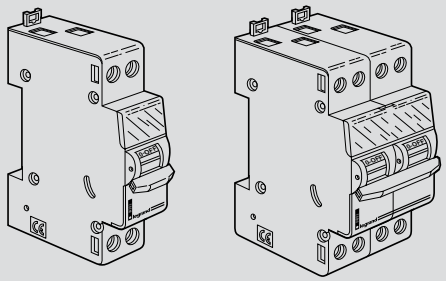

Range

2-way switch 250V a.c.
20A

Centred 2-way switch 250V a.c.
20A

Centred 2 gang 2-way switch 250V a.c.
20A

Dimensions

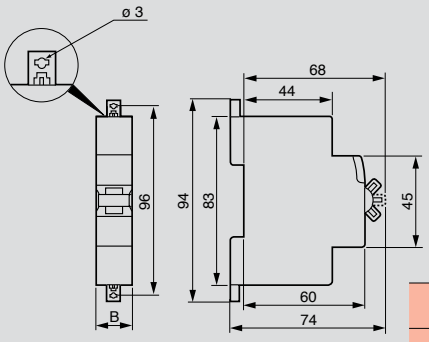

	B
412900 / 412902	17.7
412903	35.6

Electrical characteristics

Rated current: 32A with resistive load, 20AX with fluorescent load
Rated voltage: 250V a.c.
Power dissipation per pole: 1.5W
Overvoltage category: 4kV a.c.
Dielectric strength: 2kV a.c.
Nominal frequency: 50/60Hz
AC 22: mixed loads

Related accessories

Wiring accessories
- Supply busbars
- Incoming terminals

Installation

Wiring:

Conductors permitted	
Flexible with end caps	1.5 to 4mm²
Rigid	1.5 to 4mm²
Tools required	
Flat blade screwdriver	Ø4mm
Posidrive screwdriver	Pz 1
Tightening torque	
Min.	0.8Nm
Max.	1.8Nm
Recommended	1.2Nm

Protection against direct contact: IP 2x
- Cage terminals, with combined Posidrive, releasable and captive screws
- Aligning and spacing of the terminals to allow busbar connection with other products in the range
- Each unit can be disconnected and removed independently

Marking

Circuits labelled on front face:
- with label creation software
- with electronic label printer with keypad
- with preprinted sheet of symbols

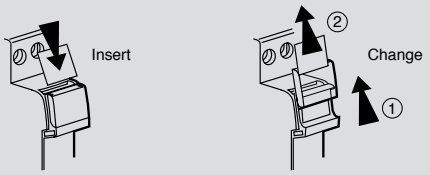

Power supply

Via the top

Analogue time switches

Cat no. 49983, 649917

Load	EconoRex MT 49983	MaxiRex 4T 649917
	230V a.c. 50Hz	
	———	
	1 x 24h	
	20A 250V a.c. μ cos φ = 1	
		-10°C to +60°C

Operation (Cat no. 49983)

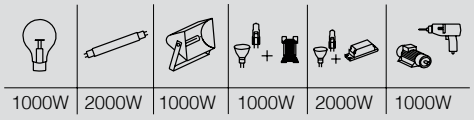

Operation (Cat no. 649917)

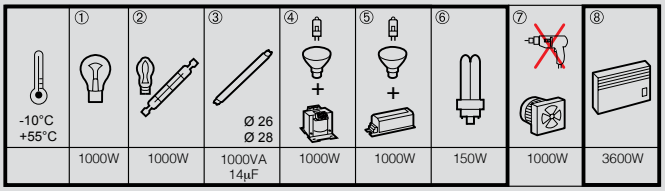

Dimensions (Cat no. 49983)

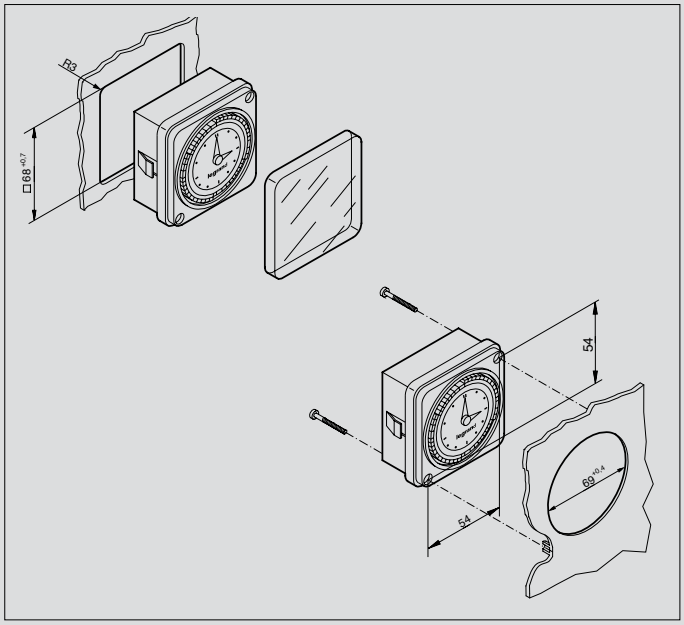

Technical characteristics (Cat no. 49983)

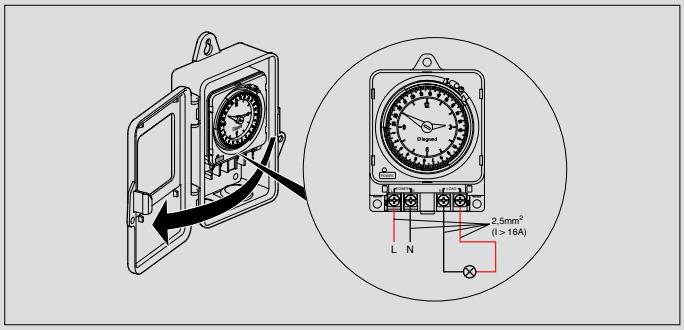

Technical characteristics (Cat no. 649917)

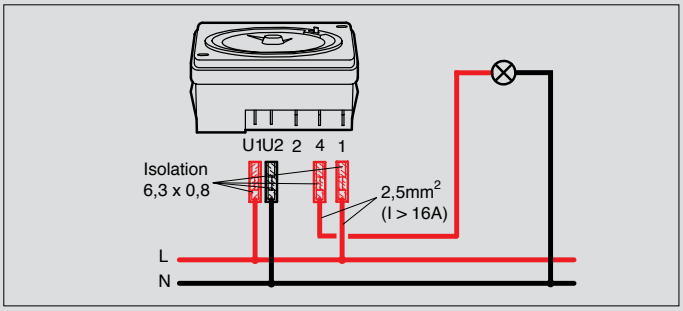

Installation

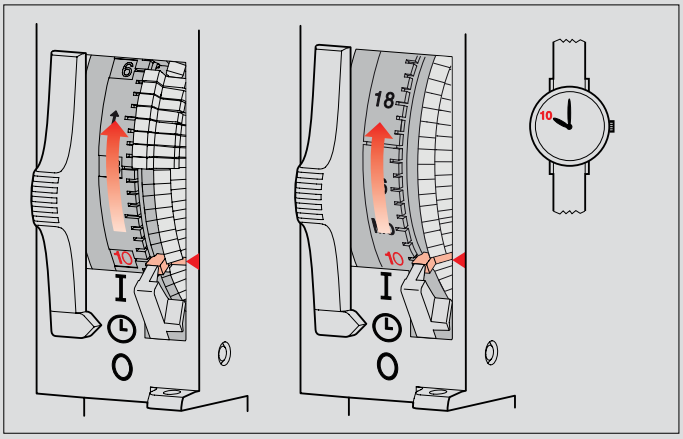

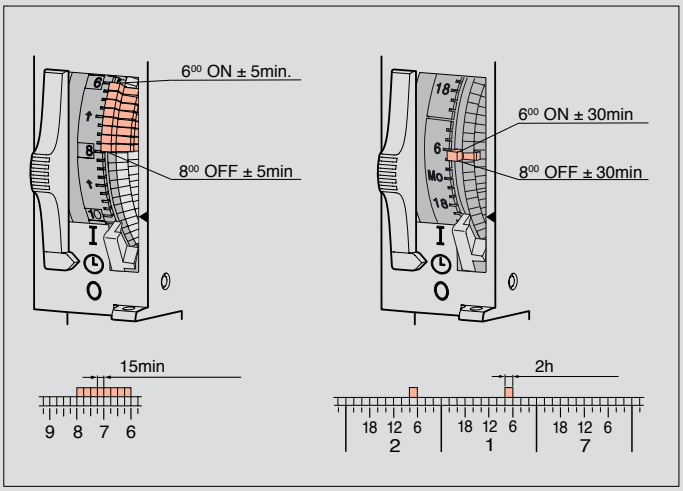

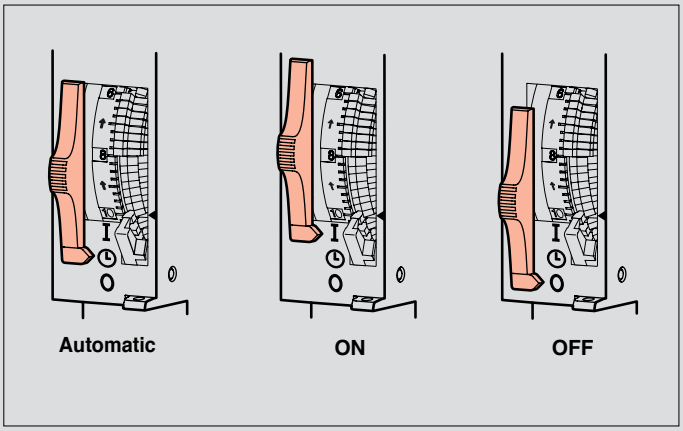

Analogue time switches

Cat no. 412780, 412790, 412794, 412795, 412812, 412813, 49754

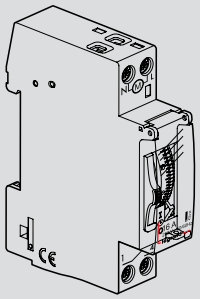

412780, 412790, 412794

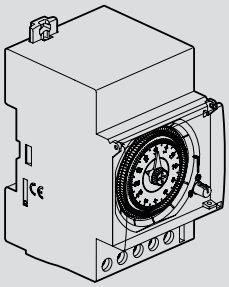

412795, 412812, 412813

Load	MicroRex T11 412780	T31 412812	MicroRex QT11 412790	QT31 412813	MicroRex QW11 412794	QW31 412795	MaxiRex CQT 49754
	230V a.c. 50Hz		230V a.c. 50-60Hz				
	———		R 100h / +25°C				
P	0.85W		0.6W				0.8W
	50H		± 2 s/d +25°C				± 1 s/d +25°C
	16A/250 V~µ cos φ = 1						
	1.5 to 4mm²		1.5 to 2.5mm²		8 mm		
	- 10°C to +55°C						
	- 10°C to +60°C						
IP	30						

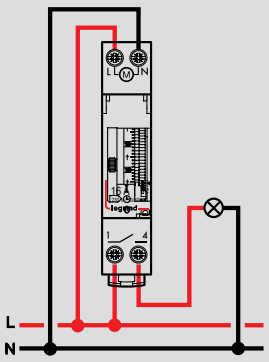

412780, 412790, 412794

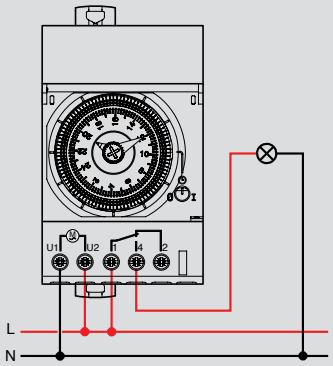

412795, 412812, 412813

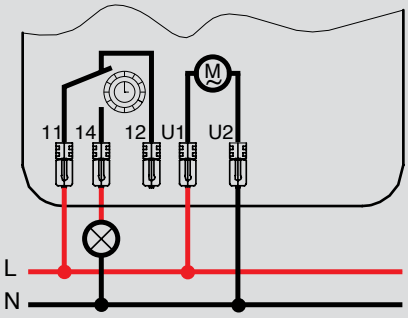

16A / 250V a.c. µ cos φ = 1

49754

Operation

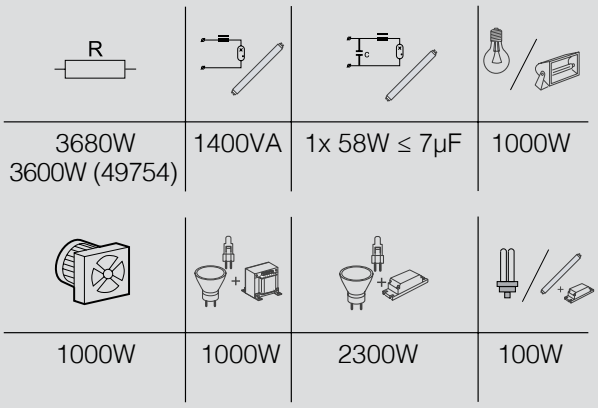

Installation

412780, 412790, 412794

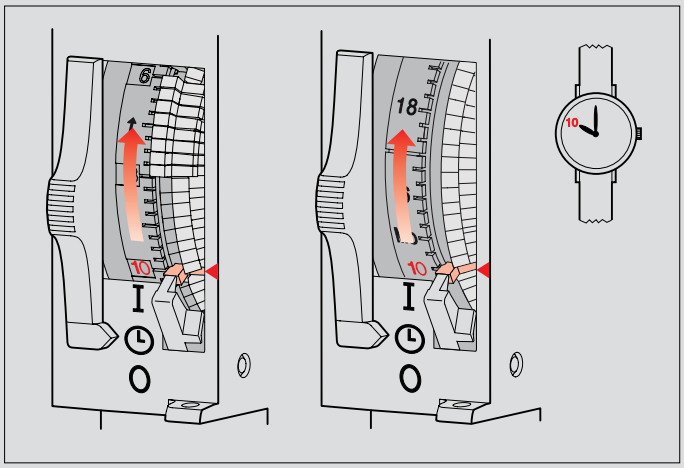

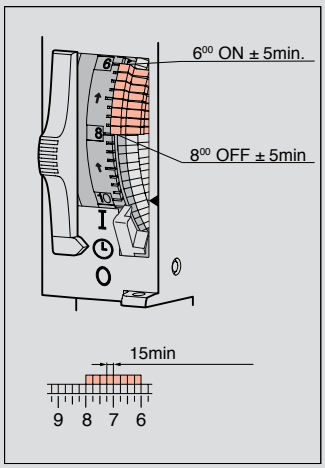

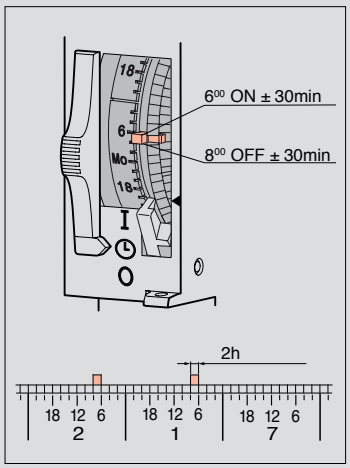

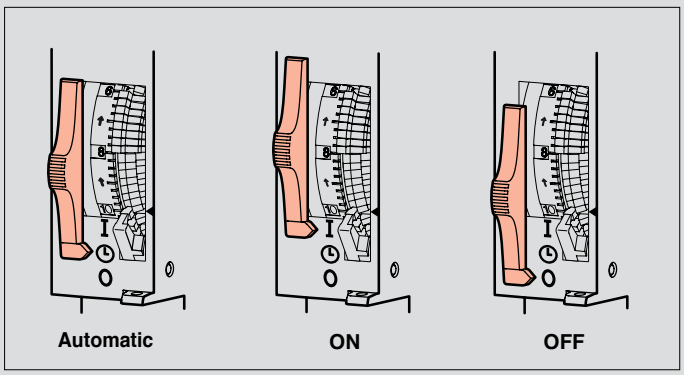

Analogue time switches

Cat no. 412780, 412790, 412794, 412795, 412812, 412813, 49754

Installation

412795, 412812, 412813

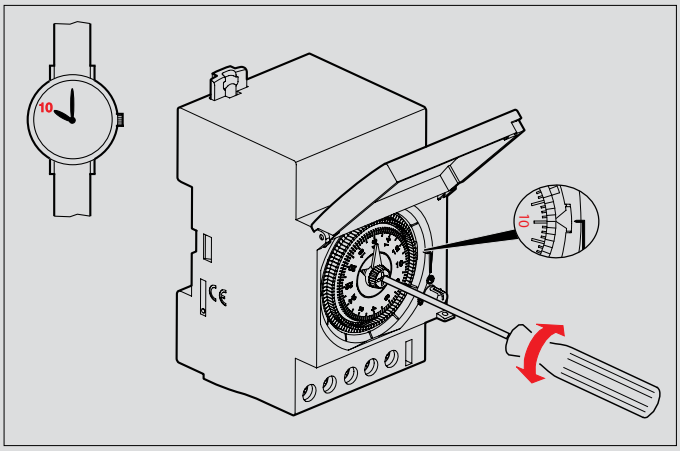

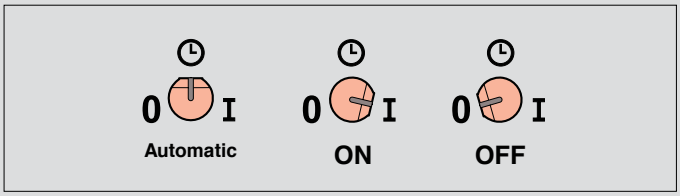

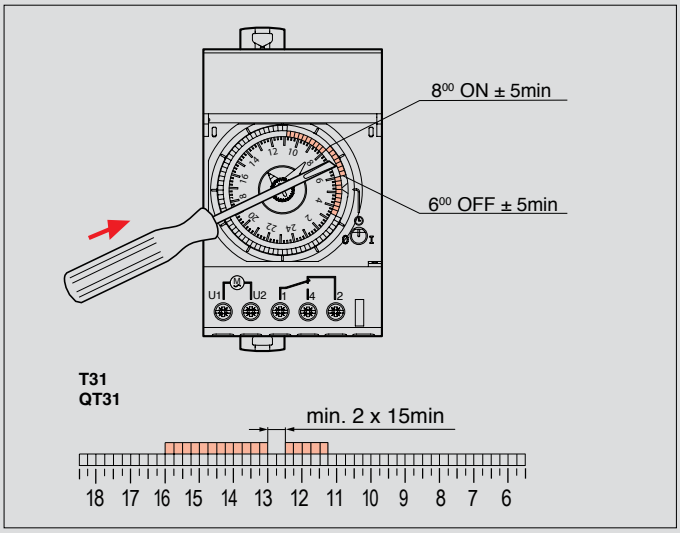

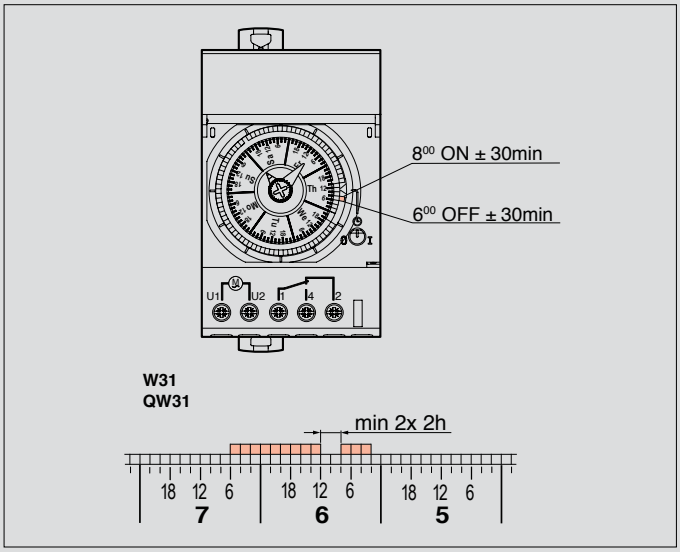

Installation

49754

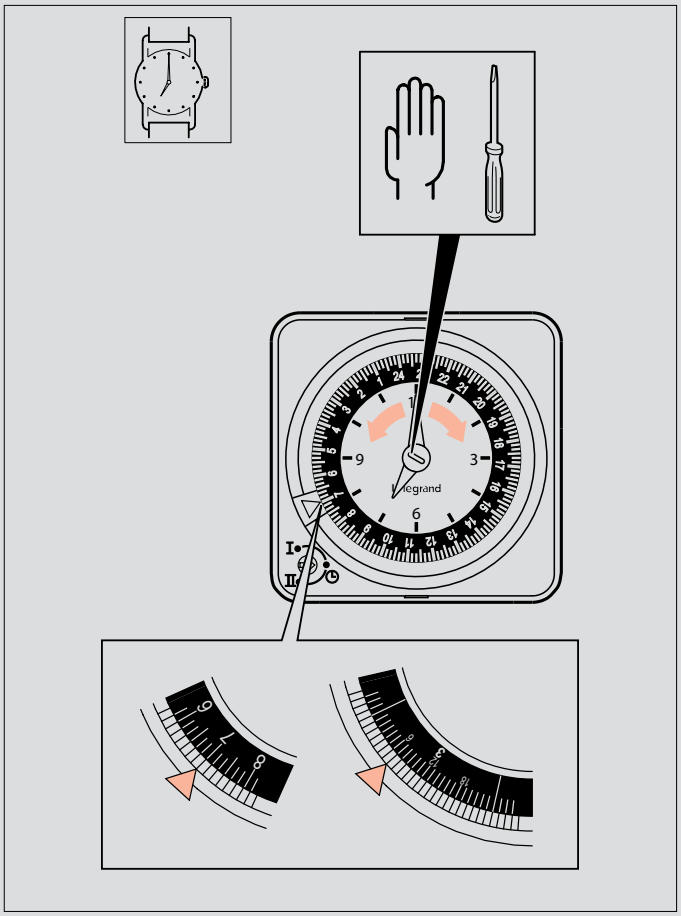

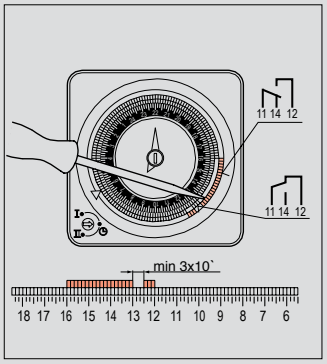

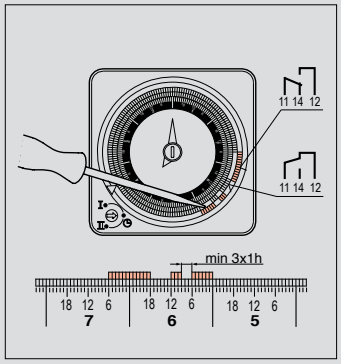

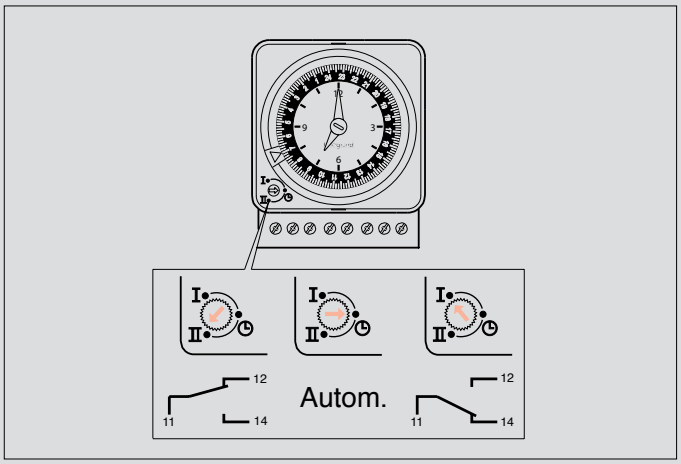

Digital time switches AlphaRex Astro weekly

Cat no. 04764, 04769

04764

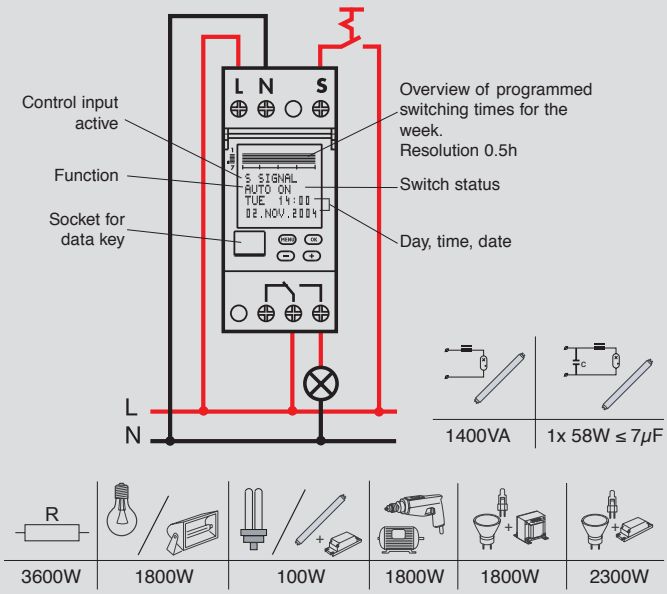

Technical characteristics

Cat no.	04764	
Supply voltage	230V a.c. 50/60Hz	
Power consumption	ca. 1W	
Relay output	1 changeover contact 16A 250V a.c. µ cos φ = 1	
Parallel compensation	60VA max. 7µF	
Accuracy	±0.2s/day under typical installation conditions	
	single strand	multi strand
Wire cross sections	1.5 to 4mm²	1.5 to 2.5mm²
Programs	28	
Geographical coordinates	Resolution 1°	
Control cable length	max. 20m	
Control signal	230V a.c./ca. 2mA 120V a.c./ca. 2mA 24V a.c./ca. 2mA	
Control pulse duration	> 100ms	
Delay time	0 mins to 23 hours 59 mins	
Battery reserve	6 years	
Storage temperature	-20°C to +60°C	
Operating temperature	-20°C to +55°C	

General information

Starting: After connection of the supply voltage, the clock starts to run with last selected function. The relay position is determined by the currently active program.

Backup battery:

- **background lighting** switched off
- **data key** READ/WRITE only via the menu

MENU — Menu selection, back in menu, Actuation >1s = operating display

OK — Confirm a selection or accept a parameter setting

− + — Selection of menu item or set a parameter

04769

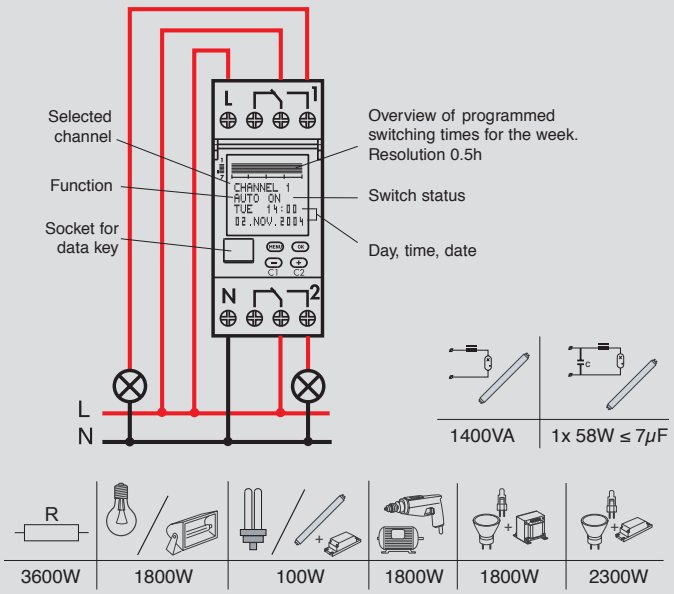

Technical characteristics

Cat no.	04769	
Supply voltage	24V a.c. 50/60Hz	
Power consumption	approx. 1W	
Relay output	2 changeover contact 16A 250V a.c. µ cos φ = 1	
Parallel compensation	60VA max. 7µF	
Accuracy	±0.2s/day under typical installation conditions	
	single strand	multi strand
Wire cross sections	1.5 to 4mm²	1.5 to 2.5mm²
Programs	14 per channel	
Geographical coordinates	Resolution 1°	
Battery reserve	6 years	
Storage temperature	-20°C to +60°C	
Operating temperature	-20°C to +55°C	

General information

Starting: After connection of the supply voltage, the clock starts to run with last selected function. The relay position is determined by the currently active program.

Backup battery:

- **background lighting** switched off
- **data key** READ/WRITE only via the menu

For 04769: When operated from the mains voltage, the time switch may not be used to switch protective low voltages. When operated from a protective low voltage, it may not be used to switch mains voltages.

MENU — Menu selection, back in menu, Actuation >1s = operating display

OK — Confirm a selection or accept a parameter setting

− + — Selection of menu item or set a parameter

C1 C2 — Channel selection

Digital time switches

Cat no. 03705

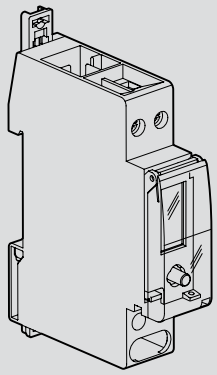

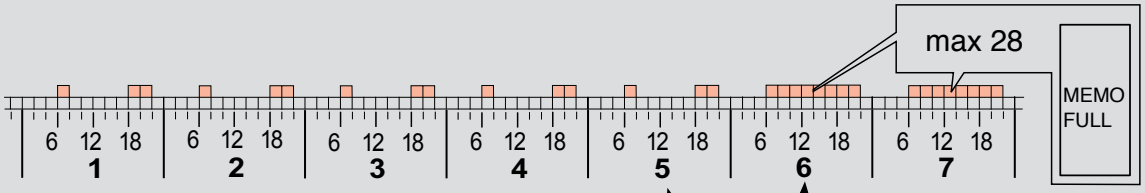

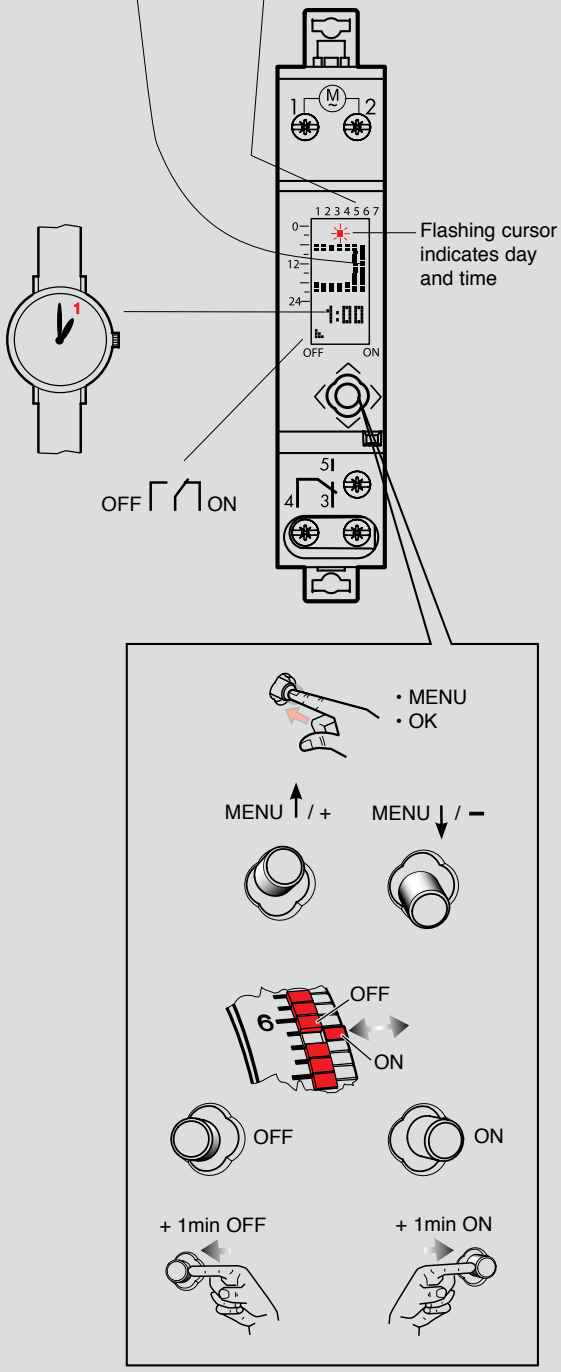

M	120/230V a.c. 50/60Hz
P	< 0.1W
	1 x 16A 250V a.c. cos φ = 1
	±1s/d 25°C
	1.5 to 4mm² / 1.5 to 2.5mm²
	6a CR2032
	- 10°C to +25°C
	- 10°C to +60°C

Operation

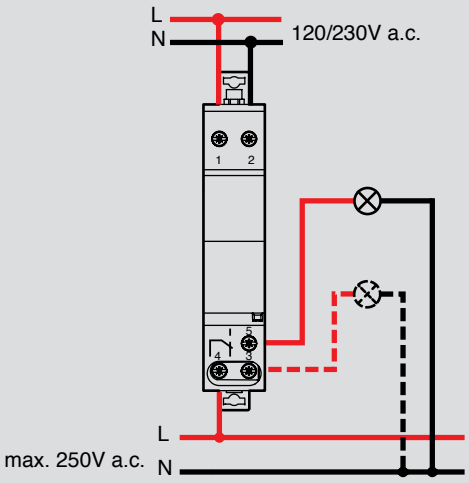

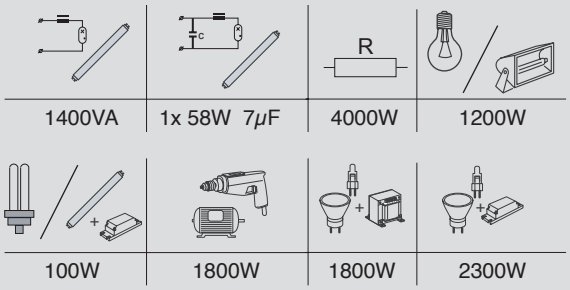

Digital time switches

Cat no. 603770, 603771 **Cat no. 412630**

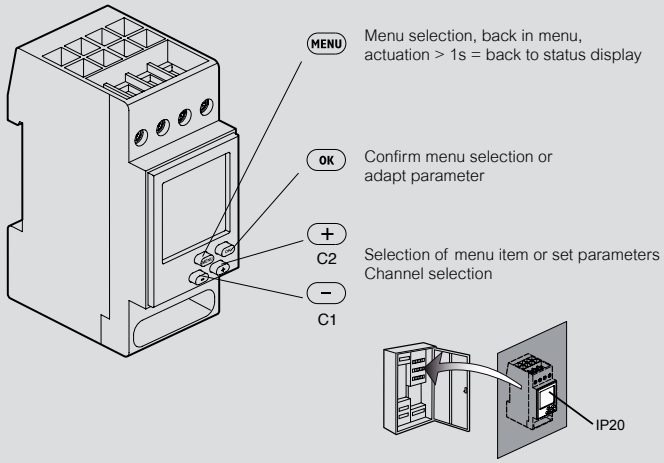

Cat no.	603770	603771
	230V a.c. 50/60Hz	
	1 x 16A/250V a.c. μ cos φ = 1	2 x 16A/250V a.c. μ cos φ = 1
Power consumption	0.9W	1.3W
Programs	28	14 / channel
Ganggenauigkeit	±1s/day under typical installation conditions	
	1 to 4mm²	0.5 to 2.5mm²
Battery reserve	3 years	
	- 20°C to +55°C	
	- 20°C to +60°C	

Operation

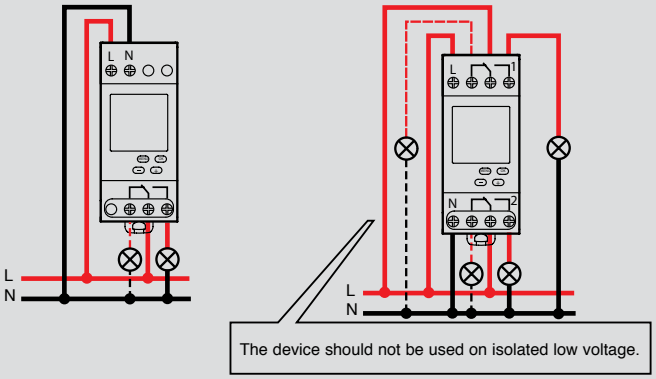

R			
3680W	2000VA	600W 7μF	2000W
2000W	2000W	2000W	1000W

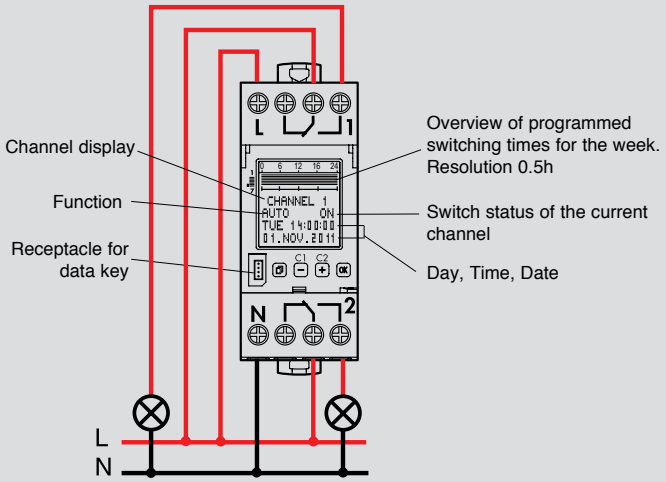

R			
3680W	2000VA	600W 7μF	2000W
2000W	2000W	2000W	1000W

General information

Starting: after applying the supply voltage, the time switch starts automatically with the last selected function. The relay position is set by the current program.

Backup battery:

- **backlighting not active**
- **data key** READ/WRITE only via the menu

For safety, when the time switch is connected to the mains supply the contact should not be used on an isolated low voltage supply and when the time switch is connected to the isolated voltage supply the contact should not be used on the mains supply.

Menu selection, back in menu, Actuation >1s = operating display

OK Confirm a selection or accept a parameter setting

C1 − C2 + Selection of menu item or set a parameter Channel selection (for 2 channel switches)

Technical characteristics

Supply voltage	230V a.c. 50/60Hz	
Power consumption	approx. 1.5W	
Relay output	2 changeover contact 16A 250V a.c. μ cos φ = 1	
Accuracy	~ 0.1s/day	
	single strand	multi strand
Wire cross sections	1.5 to 4mm²	1.5 to 2.5mm²
Programs	2 channels x 3 program types x 28 programs	
Local coordinates	Resolution 1° / 1' in EXPERT-Mode	
Battery reserve	5 years	
Storage temperature	-20°C to +60°C	
Operating temperature	-20°C to +55°C	

Digital time switches

Cat no. 412631, 412641, 412654, 412657, 412872

412631 - 1 channel

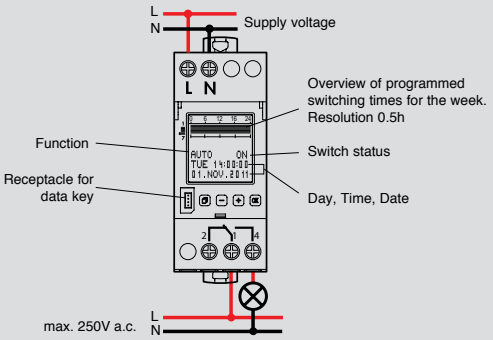

Technical characteristics

Supply voltage	230V a.c. 50/60Hz	
Effective power consumption	Approx. 1W	
Contact rating	1 changeover contact 16A 250V a.c. μ cos φ = 1	
Parallel compensation	600W max. 70μF	
Accuracy	~ 0.1s/day	
	single strand	multi strand
Terminal capacity	1.5 to 4mm²	1.5 to 2.5mm²
Programs	56	
Battery reserve	5 years	
Storage ambient	-20°C to +60°C	
Working ambient	-20°C to +55°C	
IP	20	

412641 - 2 channel

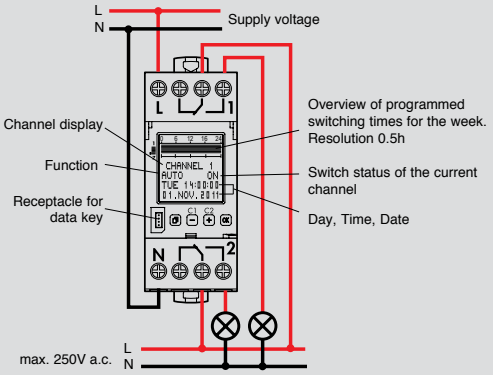

Technical characteristics

Supply voltage	230V a.c. 50/60Hz	
Consumption	1.5W	
Contact rating	2 changeover contact 16A 250V a.c. μ cos φ = 1	
Parallel compensation	600W max. 70μF	
Accuracy	~ 0.1s/day	
	single strand	multi strand
Terminal capacity	1.5 to 4mm²	1.5 to 2.5mm²
Programs	28 per channel	
Battery reserve	5 years	
Storage ambient	-20°C to +60°C	
Working ambient	-20°C to +55°C	
IP	20	

412654 - Astro with control input

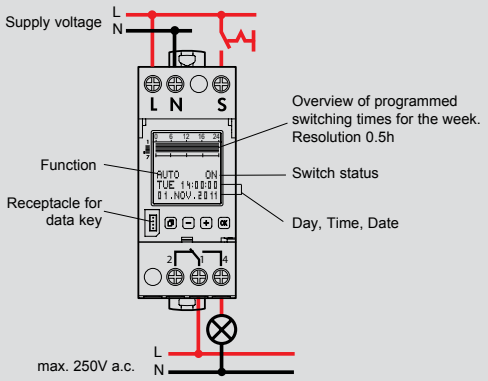

Technical characteristics

Supply voltage	230V a.c. 50/60Hz	
Consumption	1W	
Relay outputs	1 changeover contact 16A 250V a.c. μ cos φ = 1	
Accuracy	~ 0.1s/day	
	single strand	multi strand
Wire cross sections	1.5 to 4mm²	1.5 to 2.5mm²
Programs	56	
Control cable length	max. 50m	
Control signal	230V a.c./ 2mA, 120V a.c./ 2mA, 24V a.c./ 2mA	
Control pulse duration	100 to 200ms	
Delay time	0 mins to 23 hours 59 mins 59 secs	
Local coordinates	Resolution 1°/ 1' in EXPERT-Mode	
Battery reserve	5 years	
Storage ambient	-20°C to +60°C	
Working ambient	-20°C to +55°C	

Digital time switches digital multifunction

Cat no. 412631, 412641, 412654, 412657, 412872

412657 - AlphaRex³ D22 Astro

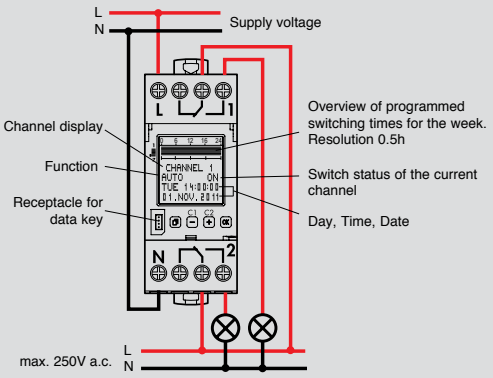

Technical characteristics

Supply voltage	230V a.c. 50/60Hz	
Consumption	1.5W	
Relay outputs	2 changeover contact 16A 250V a.c. μ cos φ = 1	
Accuracy	~ 0.1s/day	
	single strand	multi strand
Wire cross sections	1.5 to 4mm²	1.5 to 2.5mm²
Programs	2 channels x 28 programs	
Local coordinates	Resolution 1°/ 1' in EXPERT-Mode	
Battery reserve	5 years	
Storage temperature	-20°C to +60°C	
Working temperature	-20°C to +55°C	

General information (for 1 channel time switches)

Starting: after applying the supply voltage, the time switch starts automatically with the last selected function. The relay position is set by the current program.

Backup battery:

- **backlighting not active**
- **data key** READ/WRITE only via the menu

Select menu, back to main menu,
Hold down > 1s = operating display

OK Confirm selection or load parameters

C1 − C2 + Select menu options or set parameters
Channel selection

General information (for 2 channel time switches)

Starting: after applying the supply voltage, the time switch starts automatically with the last selected function. The relay position is set by the current program.

Backup battery:

- **backlighting not active**
- **data key** READ/WRITE only via the menu

For safety, when the time switch is connected to the mains supply the contact should not be used on an isolated low voltage supply and when the time switch is connected to the isolated voltage supply the contact should not be used on the mains supply.

Select menu, back to main menu,
Hold down > 1s = operating display

OK Confirm selection or load parameters

C1 − C2 + Select menu options or set parameters
Channel selection

Warning: Electrical shock - Disconnect all power from the device before dismantling the module and replacing the battery.
Always use a Li cell type battery (LiMnO2) CR2477, 3V high temperature type min +85°C

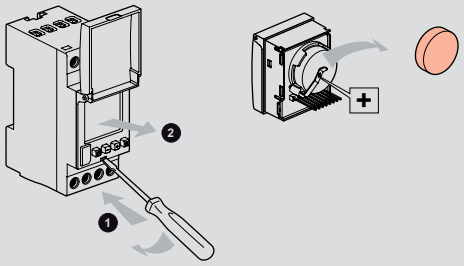

Programming transfer key - Cat no. 412872 (for Cat no. 412631, 412641)

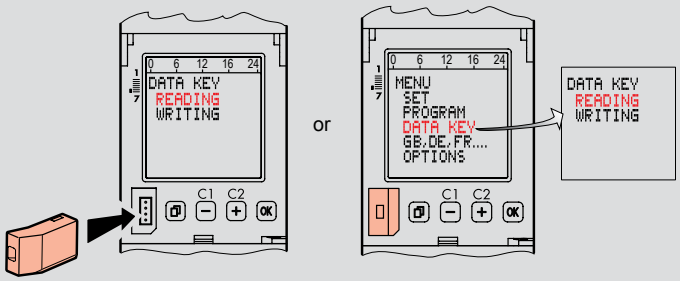

Load the programs from the data key to the time switch (READING KEY)
Warning: all programs already programmed in the time switch will be overwritten.

Digital time switches annual

Cat no. 04770

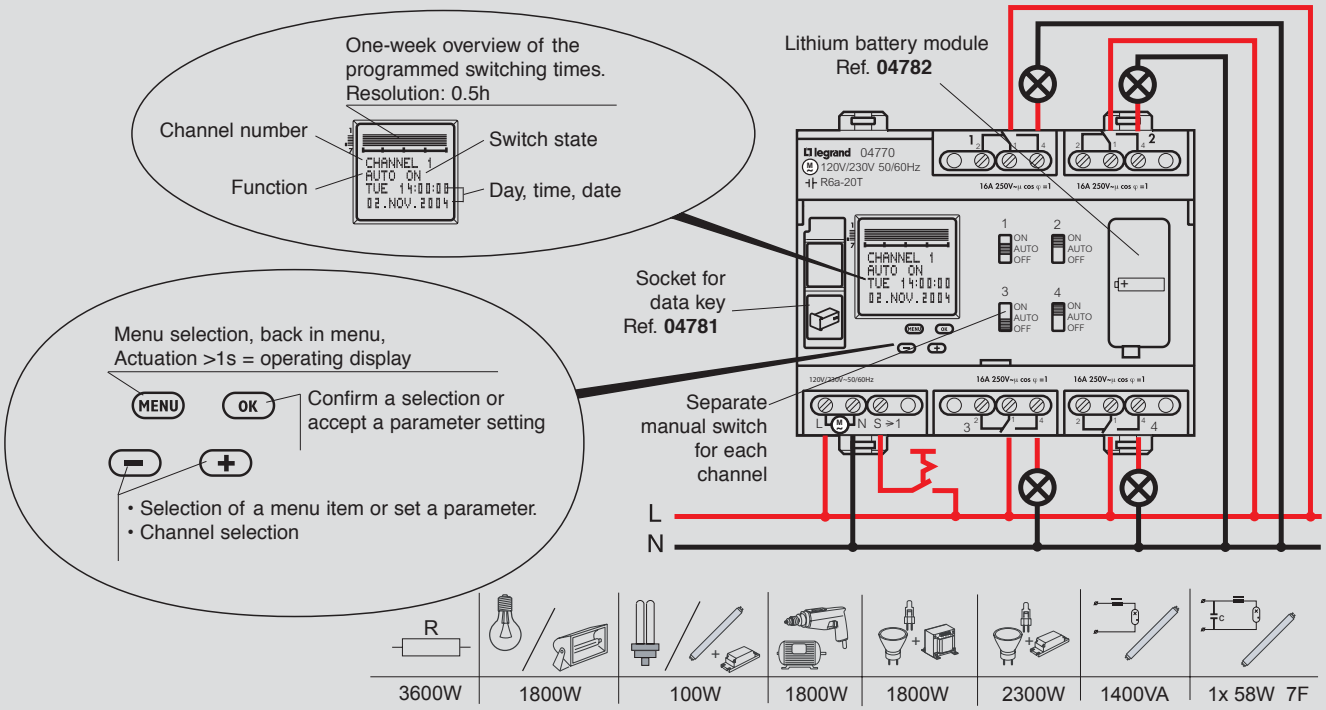

Technical characteristics

Supply voltage	120/230V a.c. 50/60Hz	
Power consumption	approx. 0.3 to 2W	
Relay output	4 changeover contact 16A 250V a.c. μ cos φ = 1	
Accuracy	±0.2s/day under typical installation conditions	
	single strand	multi strand
Wire cross sections	1.5 to 4mm²	1.5 to 2.5mm²
Programs	4 channels x 3 program types x 28 programs	
Control signal for channel 1	supply voltage, referred to neutral	
Control pulse duration	> 200ms	
Control wire length	max. 50m	
Delay time	0 mins to 23 hours 59 mins 59 secs	
Local coordinates	Resolution 1°	
Battery reserve	5 years	
Storage temperature	-20°C to +60°C	
Operating principle	Typ 1.B. S. T. IEC/EN 60730-2-7	
Operation in a normal environment		
Degree of contamination	2	
Installation	in distribution panel	

Changing the lithium battery module

Important note: If the battery is replaced with the supply voltage connected, all stored program data are retained. If the battery is replaced with the supply voltage disconnected, the date and time must be set again. Notes for disposal of the lithium battery:
Dispose of the exhausted battery in accordance with your local regulations. Make sure the battery is fully discharged before disposal.

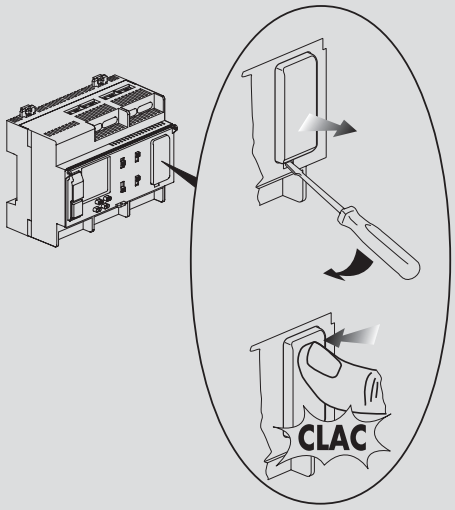

New DX³ Compact RCBO

DX³ compact RCBO with switched neutral

The new compact RCBO with neutral disconnection provides more safety by disconnecting both active and neutral.

They come designed with 30mA sensitivity for residential and commercial applications and 10mA for hospital and aged care facilities.

DX³ RCBO's provide 6kA breaking capacity from 6 - 32A and are type A which provides protection even on pulsing DC applications and prevents unwanted tripping.

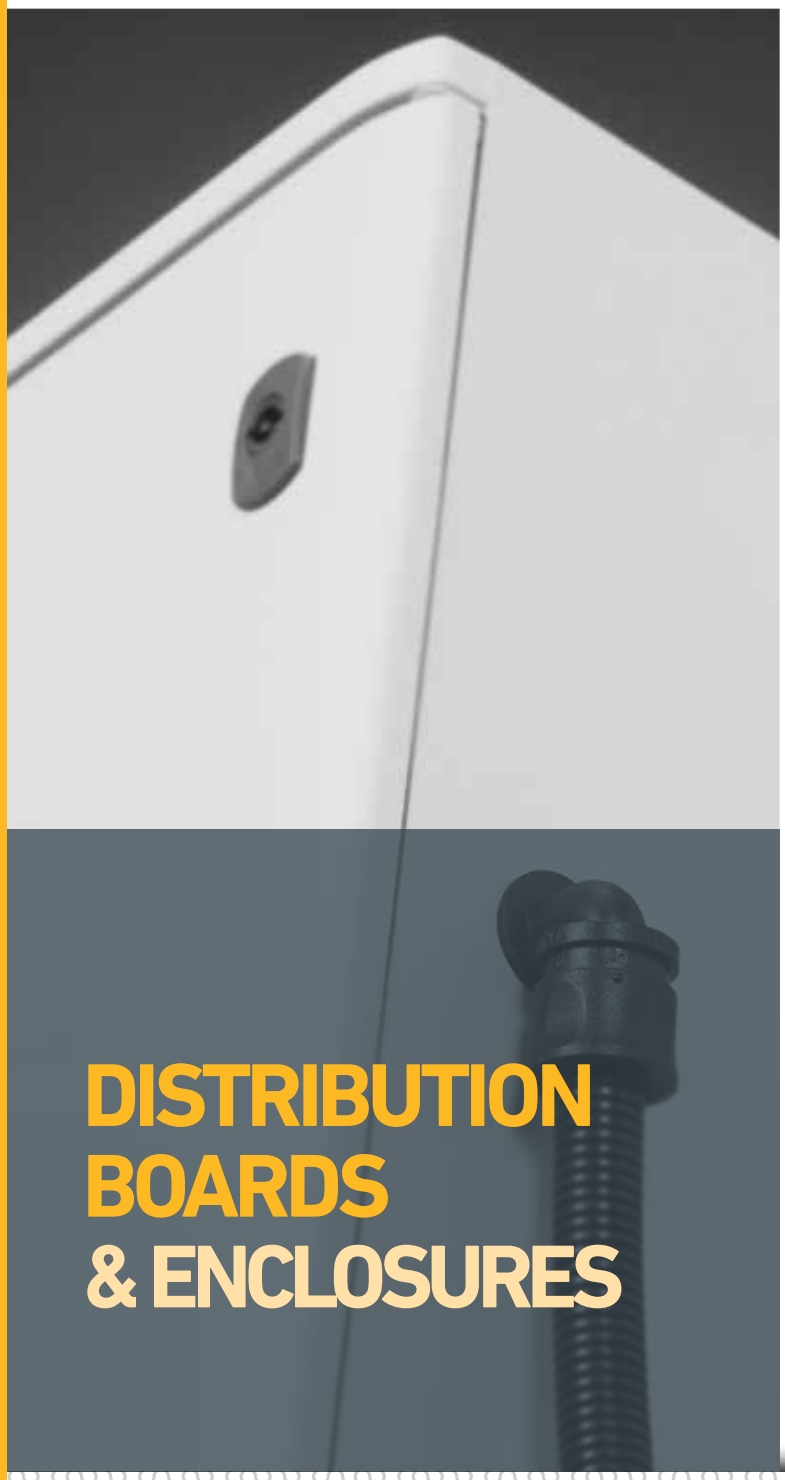

DISTRIBUTION BOARDS & ENCLOSURES

Consumer Units

P. 58
Surface Mount Consumer Units

IP65 Enclosures

P. 58
PLEXO³ IP65 Enclosures 4 to 8 Modules

Load Centres

P. 59
Surface Mount Load Centres

Distribution Boards

P. 61
Distribution Boards IP42

FEATURED PRODUCTS

Plexo³ IP65 Enclosures
(p. 58)

GOOD DESIGN Award

Surface Mount Consumer Units
(p. 58)

P. 58
PLEXO³
IP65 Enclosures
12 to 36 Modules

P. 59
Flush Mount
Load Centres

P. 59
Accessories for
Load Centres

P. 63
Distribution Boards IP55

IP42 Distribution Boards
(p. 61)

IP55 Distribution Boards
(p. 63)

Distribution cabinets and consumer units

Plexo³ IP65 enclosures and consumer units

01301

01304

HC02S

601974

601982

Cat.Nos	Plexo³ surface mount enclosures	UoM	Trade price $	GST $	Box qty	Carton qty
	Enclosures 4 to 8 modules - IP65					
601974	4 module surface mount grey 200Hx128Wx116Dmm	EA	$111.49	$11.15	-	6
601976	6 module surface mount grey 200Hx164Wx116Dmm	EA	$127.65	$12.76	-	6
601978	8 module surface mount grey 200Hx200Wx116Dmm	EA	$140.82	$14.08	-	6
	Enclosures 12 to 36 modules - IP65					
601981	12 module surface mount grey 282Hx340Wx141Dmm	EA	$196.10	$19.61	-	-
601982	24 module surface mount grey 432Hx340Wx161Dmm	EA	$307.82	$30.78	-	-
601983	36 module surface mount grey 622Hx340Wx161Dmm	EA	$467.53	$46.75	-	-
	Surface mount consumer units with DIN-rail					
	Legrand series 1 to 9 modules - 1 row					
01301	1 module white IP30 140Hx30Wx72Dmm	EA	$12.20	$1.22	10	100
01302	2 module white IP30 140Hx50Wx72Dmm	EA	$13.73	$1.37	10	100
01304	4 module white IP30 160Hx90Wx74Dmm	EA	$15.83	$1.58	10	40
01306	6 module white IP30 160Hx128Wx74Dmm earth connection IP2x (4x 1.5-16mm²)	EA	$25.15	$2.52	5	30
01308	9 module white IP30 180Hx190Wx83Dmm earth connection IP2x (8x 1.5-16mm²)	EA	$50.76	$5.08	-	5
	HC series (will fit into customer equipment area on NSW meter box panel)					
HC01S	1 module white IP20 140Hx35Wx68Dmm	EA	$10.35	$1.04	10	180
HC02S	2 module white IP20 140Hx54Wx68Dmm	EA	$12.11	$1.21	6	108
HC03S	3 module white IP20 140Hx72Wx68Dmm	EA	$14.06	$1.41	4	80
	Accessories					
HEEPF5	Pole fillers 5 module 4x18mm and 2x9mm for consumer units	EA	$5.10	$0.51	-	200
01955	Pack of piercing end caps 2xØ32mm, 5xØ25mm and 10xØ20mm	EA	$25.00	$2.50	-	8
01961	Blanking plate 5 separable into modules or 1/2 module	EA	$2.33	$0.23	20	200
01966	Keylock no 850	EA	$15.78	$1.58	-	50
01969	Fixing lugs (set of 4 walls mounting lugs)	EA	$58.36	$5.84	-	20

N New product | ECO Energy Saving products | More info available. See technical pages | COMING SOON Coming soon | Product to be discontinued

Whilst most items are stock lines some products are made to order. UoM = Unit Of Measure.
Prices are effective 1 June 2017 and are subject to change without notice. Trade prices exclude GST.

Distribution cabinets and consumer units

Load centres

HL12S

HEE18S

HL12F

601209

Cat.Nos	HLC Load centre enclosures with neutral and earth bars		UoM	Trade price $	GST $	Box qty	Carton qty
	Surface mount load centres						
HLC12S	12 module surface mount load centre 210Hx256Wx100Dmm	N	EA	$106.84	$10.68	1	1
HLC18S	18 module surface mount load centre 222Hx364Wx100Dmm	N	EA	$113.51	$11.35	1	1
HLC24S	24 module surface mount load centre 325Hx270Wx100Dmm	N	EA	$211.14	$21.11	1	1
HLC36S	36 module surface mount load centre 473Hx305Wx100Dmm	N	EA	$273.45	$27.34	1	1
	Flush mount load centres						
HLC12F	12 module Flush mount load centre 210Hx259Wx60Dmm	N	EA	$106.84	$10.68	1	1
HLC18F	18 module flush mount load centre 228Hx259Wx67Dmm	N	EA	$113.51	$11.35	1	1
HLC24F	24 module flush mount load centre 311Hx259Wx71Dmm	N	EA	$211.14	$21.11	1	1
HLC36F	36 module flush mount load centre 458Hx296Wx71Dmm	N	EA	$273.45	$27.34	1	1
	Accessories for HLC range						
HLC12MP	Metal back plate for HLC range 12 module 134Hx149Wx1Dmm	N	EA	$35.10	$3.51	1	1
HLC18MP	Metal back plate for HLC range 18 module 181Hx159Wx1Dmm	N	EA	$36.10	$3.61	1	1
	HL Load centre enclosures with neutral and earth bars						
	Surface mount load centres						
HL12S	12 module surface mount. white IP30 240Hx318Wx109Dmm		EA	$111.53	$11.15	5	5
HEE18S	18 module surface mount. white IP30 214Hx383Wx104Dmm		EA	$118.32	$11.83	-	4
HL24S	24 module surface mount. white IP30 380Hx318Wx109Dmm		EA	$219.92	$21.99	-	-
HL36S	36 module surface mount. white IP30 505Hx318Wx109Dmm		EA	$284.96	$28.50	-	-
HL48S	48 module surface mount. white IP30 630Hx318Wx109Dmm		EA	$373.73	$37.37	-	-
	Flush mount load centres						
HL12F	12 module flush mount. white IP30 305Hx315Wx90Dmm		EA	$111.53	$11.15	-	-
HEE18F	18 module flush mount. white IP30 223Hx392Wx71Dmm		EA	$118.32	$11.83	-	4
HL24F	24 module flush mount. white IP30 430Hx315Wx90Dmm		EA	$219.92	$21.99	-	-
HL36F	36 module flush mount. white IP30 555Hx315Wx90Dmm		EA	$284.96	$28.50	-	-
HL48F	48 module flush mount. white IP30 680Hx315Wx90Dmm		EA	$373.73	$37.37	-	-

N New product | ECO Energy Saving products | More info available. See technical pages | Coming soon | Product to be discontinued

Whilst most items are stock lines some products are made to order. UoM = Unit Of Measure.
Prices are effective 1 June 2017 and are subject to change without notice. Trade prices exclude GST.

Distribution cabinets and consumer units

Load centers

01491

601206

601208

Cat.Nos	Accessories for HL range	UoM	Trade price $	GST $	Box qty	Carton qty
HL12FS-BP	Metal back plate for 12 module flush mount load centres	EA	$36.60	$3.66	-	-
HEE18FS-BP	Metal back plate for 18 module flush mount load centres	EA	$37.62	$3.76	-	-
HL24FS-BP	Metal back plate for 24 module flush mount load centres	EA	$39.80	$3.98	-	-
HL36FS-BP	Metal back plate for 36 module flush mount load centres	EA	$42.69	$4.27	-	-
HL48FS-BP	Metal back plate for 48 module flush mount load centres	EA	$46.04	$4.60	-	-
01491	Locking accessory for 12 to 48 module load centres	EA	$33.13	$3.31	-	50
601206	Spare door for 12 module load centres	EA	$31.36	$3.14	-	10
601207	Spare door for 24 module load centres	EA	$31.36	$3.14	-	8
601208	Spare door for 36 module load centres	EA	$52.11	$5.21	-	4
601209	Spare door for 48 module load centres	EA	$132.92	$13.29	-	-

Distribution boards

Distribution boards IP42

DB36P250M0800H

DB24P250M0800HO

DB36P250M0800HO

Cat.Nos	1 DIN standard with main switch	UoM	Trade price $	GST $	Box qty	Carton qty
	Grey					
DB24P250M0800H	24P 250A IP42 800Hx590Wx225Dmm	EA	$1,784.32	$178.43	-	-
DB36P250M0800H	36P 250A IP42 800Hx590Wx225Dmm	EA	$2,001.09	$200.11	-	-
DB48P250M1000H	48P 250A IP42 1000Hx590Wx225Dmm	EA	$2,038.27	$203.83	-	-
DB60P250M1000H	60P 250A IP42 1000Hx590Wx225Dmm	EA	$2,322.33	$232.23	-	-
DB72P250M1200H	72P 250A IP42 1200Hx590Wx225Dmm	EA	$2,499.52	$249.95	-	-
DB84P250M1400H	84P 250A IP42 1400Hx590Wx225Dmm	EA	$2,649.52	$264.95	-	-
	Orange					
DB24P250M0800HO	24P 250A IP42 800Hx590Wx225Dmm	EA	$1,784.32	$178.43	-	-
DB36P250M0800HO	36P 250A IP42 800Hx590Wx225Dmm	EA	$2,001.09	$200.11	-	-
DB48P250M1000HO	48P 250A IP42 1000Hx590Wx225Dmm	EA	$2,038.27	$203.83	-	-
DB60P250M1000HO	60P 250A IP42 1000Hx590Wx225Dmm	EA	$2,322.33	$232.23	-	-
DB72P250M1200HO	72P 250A IP42 1200Hx590Wx225Dmm	EA	$2,499.52	$249.95	-	-
DB84P250M1400HO	84P 250A IP42 1400Hx590Wx225Dmm	EA	$2,649.52	$264.95	-	-

	2 DIN standard with main switch					
	Grey					
DB24PM2D0800H	24P 250A 2 x DIN cut-outs IP42 800Hx590Wx225Dmm	EA	$1,856.12	$185.61	-	-
DB36PM2D1000H	36P 250A 2 x DIN cut-outs IP42 1000Hx590Wx225Dmm	EA	$2,167.94	$216.79	-	-
DB48PM2D1200H	48P 250A 2 x DIN cut-outs IP42 1200Hx590Wx225Dmm	EA	$2,257.04	$225.70	-	-
DB60PM2D1200H	60P 250A 2 x DIN cut-outs IP42 1200Hx590Wx225Dmm	EA	$2,390.68	$239.07	-	-
DB72PM2D1400H	72P 250A 2 x DIN cut-outs IP42 1400Hx590Wx225Dmm	EA	$2,570.89	$257.09	-	-
DB84PM2D1400H	84P 250A 2 x DIN cut-outs IP42 1400Hx590Wx225Dmm	EA	$2,827.98	$282.80	-	-
DBEQUIP-2D400H	Equipment box 250A IP42 400Hx590Wx225Dmm	EA	$1,530.10	$153.01	-	-

	1 DIN split chassis with main switch					
	Grey					
DB12/12P0800H	12P+12P 250A IP42 1000Hx590Wx225Dmm	EA	$1,957.72	$195.77	-	-
DB24/24P1000H	24P+24P 250A IP42 1000Hx590Wx225Dmm	EA	$2,021.90	$202.19	-	-

N New product | ECO Energy Saving products | More info available. See technical pages | COMING SOON Coming soon | Product to be discontinued

Whilst most items are stock lines some products are made to order. UoM = Unit Of Measure.
Prices are effective 1 June 2017 and are subject to change without notice. Trade prices exclude GST.

Distribution boards

Distribution boards IP42

DB12/12P08002D

DB12/24P10002D

DB12/12P08002DO

Cat.Nos	2 DIN split chassis with main switch	UoM	Trade price $	GST $	Box qty	Carton qty
	Grey					
DB12/12P08002D	12P+12P 250A IP42 800Hx590Wx225Dmm	EA	$2,115.46	$211.55	-	-
DB12/24P10002D	12P+24P 250A IP42 1000Hx590Wx225Dmm	EA	$2,230.87	$223.09	-	-
DB12/36P12002D	12P+36P 250A IP42 1200Hx590Wx225Dmm	EA	$2,272.03	$227.20	-	-
DB12/48P12002D	12P+48P 250A IP42 1200Hx590Wx225Dmm	EA	$2,587.97	$258.80	-	-
DB12/60P14002D	12P+60P 250A IP42 1400Hx590Wx225Dmm	EA	$2,837.61	$283.76	-	-
DB12/72P14002D	12P+72P 250A IP42 1400Hx590Wx225Dmm	EA	$3,007.69	$300.77	-	-
DB24/24P12002D	24P+24P 250A IP42 1200Hx590Wx225Dmm	EA	$2,272.03	$227.20	-	-
DB24/36P12002D	24P+36P 250A IP42 1200Hx590Wx225Dmm	EA	$2,587.97	$258.80	-	-
DB24/48P14002D	24P+48P 250A IP42 1400Hx590Wx225Dmm	EA	$2,837.61	$283.76	-	-
DB24/60P14002D	24P+60P 250A IP42 1400Hx590Wx225Dmm	EA	$3,007.69	$300.77	-	-
DB36/36P14002D	36P+36P 250A IP42 1400Hx590Wx225Dmm	EA	$2,837.61	$283.76	-	-
DB36/48P14002D	36P+48P 250A IP42 1400Hx590Wx225Dmm	EA	$3,007.69	$300.77	-	-
	Orange					
DB12/12P08002DO	12P+12P 250A IP42 800Hx590Wx225Dmm	EA	$2,156.53	$215.65	-	-
DB12/24P10002DO	12+24P 250A IP42 1000Hx590Wx225Dmm	EA	$2,274.19	$227.42	-	-
DB12/36P12002DO	12+36P 250A IP42 1200Hx590Wx225Dmm	EA	$2,274.19	$227.42	-	-
DB12/48P12002DO	12+48P 250A IP42 1200Hx590Wx225Dmm	EA	$2,638.22	$263.82	-	-
DB12/60P14002DO	12+60P 250A IP42 1400Hx590Wx225Dmm	EA	$2,840.31	$284.03	-	-
DB12/72P14002DO	12+72P 250A IP42 1400Hx590Wx225Dmm	EA	$3,010.56	$301.06	-	-
DB24/24P12002DO	24P+24P 250A IP42 1200Hx590Wx225Dmm	EA	$2,274.19	$227.42	-	-
DB24/36P12002DO	24+36P 250A IP42 1200Hx590Wx225Dmm	EA	$2,638.22	$263.82	-	-
DB24/48P14002DO	24+48P 250A IP42 1400Hx590Wx225Dmm	EA	$2,840.31	$284.03	-	-
DB24/60P14002DO	24P+60P 250A IP42 1400Hx590Wx225Dmm	EA	$3,010.56	$301.06	-	-
DB36/36P14002DO	36P+36P 250A IP42 1400Hx590Wx225Dmm	EA	$2,840.31	$284.03	-	-
DB36/48P14002DO	36+48P 250A IP42 1400Hx590Wx225Dmm	EA	$3,010.56	$301.06	-	-

N New product | ECO Energy Saving products | More info available. See technical pages | COMING SOON Coming soon | Product to be discontinued

Whilst most items are stock lines some products are made to order. UoM = Unit Of Measure.
Prices are effective 1 June 2017 and are subject to change without notice. Trade prices exclude GST.

Distribution boards

Distribution boards IP55

HPM0800L2425F

DB24PM2D0800O

Cat.Nos	1 DIN standard with main switch	UoM	Trade price $	GST $	Box qty	Carton qty
	Grey					
HPM0800L2425F	24P 250A IP55 800Hx600Wx200Dmm	EA	$2,342.01	$234.20	-	-
HPM0800L3625F	36P 250A IP55 800Hx600Wx200Dmm	EA	$2,615.45	$261.54	-	-
HPM1000L4825F	48P 250A IP55 1000Hx600Wx200Dmm	EA	$2,811.56	$281.16	-	-
HPM1000L6025F	60P 250A IP55 1000Hx600Wx200Dmm	EA	$3,245.24	$324.52	-	-
HPM1200L7225F	72P 250A IP55 1200Hx600Wx200Dmm	EA	$3,565.81	$356.58	-	-
HPM1200L8425F	84P 250A IP55 1200Hx600Wx200Dmm	EA	$3,809.06	$380.91	-	-
	2 DIN standard with main switch					
	Orange					
DB24PM2D0800O	24P 250A IP55 800Hx590Wx225Dmm	EA	$1,856.12	$185.61	-	-
DB36PM2D1000O	36P 250A IP55 1000Hx590Wx225Dmm	EA	$2,167.94	$216.79	-	-
DB48PM2D1200O	48P 250A IP55 1200Hx590Wx225Dmm	EA	$2,257.04	$225.70	-	-
DB60PM2D1200O	60P 250A IP55 1200Hx590Wx225Dmm	EA	$2,390.68	$239.07	-	-
DB72PM2D1400O	72P 250A IP55 1400Hx590Wx225Dmm	EA	$2,570.89	$257.09	-	-
DB84PM2D1400O	84P 250A IP55 1400Hx590Wx225Dmm	EA	$2,827.98	$282.80	-	-
DB96PM2D1200O	96P 250A IP55 1200Hx590Wx225Dmm	EA	$3,146.00	$314.60	-	-
	Accessories					
DBEQUIP-2D400H	Equipment box 250A IP42 Grey 400Hx590Wx225Dmm	EA	$1,530.10	$153.01	-	-
DBEQUIP-2D400HO	Equipment box 250A IP42 Orange 400Hx590Wx225Dmm	EA	$1,530.10	$153.01	-	-

N New product | ECO Energy Saving products | More info available. See technical pages | COMING SOON Coming soon | Product to be discontinued

Whilst most items are stock lines some products are made to order. UoM = Unit Of Measure.
Prices are effective 1 June 2017 and are subject to change without notice. Trade prices exclude GST.

Residential Load Centres

HLC Load Centres

Legrand's HLC range of load centres cover from 12 to 36 modules for flush and surface mounted installation for multi-dwelling units and houses.

The HLC range includes neutral and earth bars that are tested to AS/NZS 61439.3

For more information on our residential load centre range please contact your local Legrand representative.

Cabinets & Enclosures

Plexo³ cabinet

Solutions for specific applications

The design of Plexo³ IP65 cabinets makes them suitable for use in commercial or industrial applications, as well as in public and high rise buildings.

Plexo³ cabinets are available from 4 to 36 modules, and are supplied with IP2X earth and neutral terminal blocks.

GOOD DESIGN Award

Enclosures for all corrosive environments

Designed in fibreglass reinforced polyester, these enclosures are particularly suitable for corrosive environments: marine, petrochemical, food processing industries and provide excellent UV resistance.

Marina enclosures

Marina cabinets

For more information on the Marina enclosures please contact your local Legrand representative.

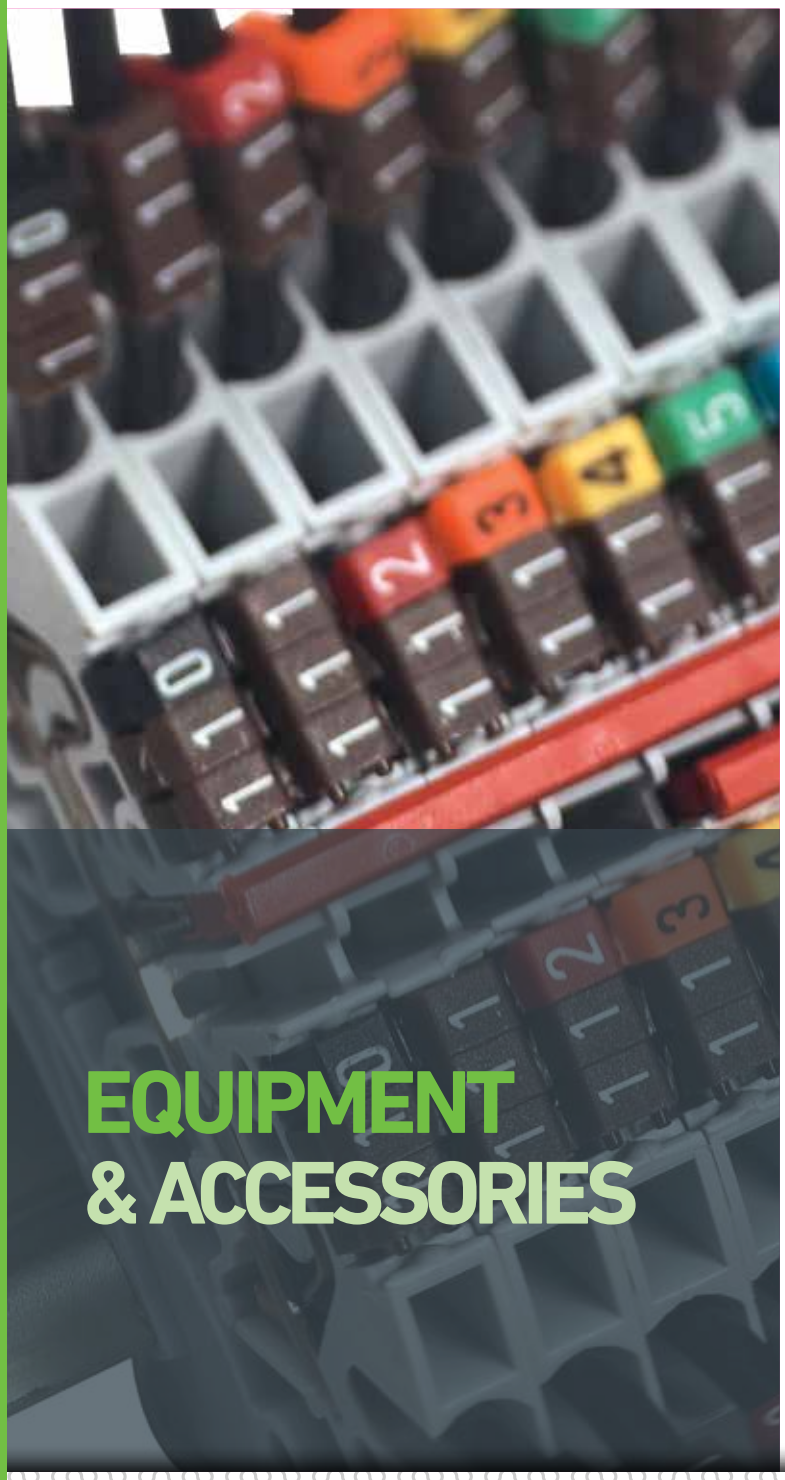

EQUIPMENT & ACCESSORIES

Industrial Plugs & Sockets

P. 68
Hypra IP66/67 Protected Outlets

Industrial Enclosures

P. 74
IP55 Plastic Box

Cable Ducting

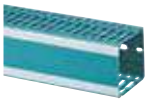

P. 76
Lina 25 Cable Ducting

Marking System

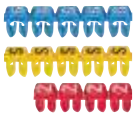

P. 78
CAB3 Cable Marking System

Terminal Blocks

P. 88
Viking™3 Terminal Blocks with Screw Connection

Ferrules

P. 91
Starfix™ Ferrules

FEATURED PRODUCTS

Industrial Socket Hypra IP66/67

Refrigerated Container Unit
(p. 71)

Industrial Enclosure IP66

Plastic Box
(p. 76)

P. 69
Hypra IP66/67
Switch Outlets

P. 70
Hypra IP66/67
Plugs

P. 71
Hypra IP44/55
Plugs

P. 72
Hypra
IP44/55/66/67
Sockets

P. 74
IP55
Junction Boxes

P. 74
IP66
Plastic Boxes

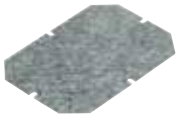
P. 74
Accessories

P. 76
TRANSCAB
Cable Ducting

P. 77
Spiral Binding

P. 85
MEMOCAB Cable
Marking System

P. 86
MEMOCAB Marker
Holders

P. 90
Viking™3 Accessories

P. 92
Starfix™ Crimping Tools

Viking™3 Terminal Blocks

(p. 90)

IEC industrial plugs and sockets

HYPRA IP66-67 protected outlet

59651

59657

59661

Cat.Nos	RCBO protected outlets IP66/67	UoM	Trade price $	GST $	Box qty	Carton qty
	2P+E					
59651	Combination switched socket /RCBO 2P+E 240V a.c. 16A grey	EA	$1,010.37	$101.04	-	-
59655	Combination switched socket /RCBO 2P+E 240V a.c. 32A grey	EA	$1,111.61	$111.16	-	-
	3P+E					
59652	Combination switched socket /RCBO 3P+E 415V a.c. 16A grey	EA	$1,253.32	$125.33	-	-
59657	Combination switched socket /RCBO 3P+E 415V a.c. 32A grey	EA	$1,395.08	$139.51	-	-
59659	Combination switched socket /RCBO 3P+E 415V a.c. 63A grey	EA	$2,052.22	$205.22	-	-
	3P+N+E					
59653	Combination switched socket /RCBO 3P+N+E 415V a.c. 16A grey	EA	$1,273.61	$127.36	-	-
59658	Combination switched socket /RCBO 3P+N+E 415V a.c. 32A grey	EA	$1,415.30	$141.53	-	-
	RCD protected outlets IP66/67					
59681	Combination switched socket RCD protected 5 pin 415V a.c. 63A grey	EA	$1,943.46	$194.35	-	-
	MCB protected outlets IP66/67					
	2P+E					
59661	Combination switched socket/MCB 2P+E 240V a.c. 16A grey	EA	$868.68	$86.87	-	-
59665	Combination switched socket/MCB 2P+E 240V a.c. 32A grey	EA	$929.39	$92.94	-	-
	3P+E					
59662	Combination switched socket /MCB 3P+E 415V a.c. 16A grey	EA	$808.07	$80.81	-	-
59667	Combination switched socket /MCB 3P+E 415V a.c. 32A grey	EA	$990.17	$99.02	-	-
59669	Combination switched socket /MCB 3P+E 415V a.c. 63A grey	EA	$1,533.25	$153.32	-	-
	3P+N+E					
59663	Combination switched socket /MCB 3P+N+E 415V a.c. 16A grey	EA	$929.39	$92.94	-	-
59668	Combination switched socket /MCB 3P+N+E 415V a.c. 32A grey	EA	$1,010.37	$101.04	-	-
59670	Combination switched socket /MCB 3P+N+E 415V a.c. 63A grey	EA	$1,800.71	$180.07	-	-

IEC industrial plugs and sockets

HYPRA IP66-67 switch outlets

59265

52936

52946

Cat.Nos	Switched socket outlets IP66/67	UoM	Trade price $	GST $	Box qty	Carton qty
	2P+E					
59260	Combination switched socket 2P+E 240V a.c. 16A grey	EA	$460.07	$46.01	-	-
59263	Combination switched socket 2P+E 240V a.c. 32A grey	EA	$636.94	$63.69	-	-
	3P+E					
59261	Combination switched socket 3P+E 415V a.c. 16A grey	EA	$529.87	$52.99	-	-
59264	Combination switched socket 3P+E 415V a.c. 32A grey	EA	$690.50	$69.05	-	-
59266	Combination switched socket 3P+E 415V a.c. 63A grey	EA	$1,008.59	$100.86	-	-
	3P+N+E					
59262	Combination switched socket 3P+N+E 415V a.c. 16A grey	EA	$571.69	$57.17	-	-
59265	Combination switched socket 3P+N+E 415V a.c. 32A grey	EA	$773.81	$77.38	-	-
59267	Combination switched socket 3P+N+E 415V a.c. 63A grey	EA	$1,250.88	$125.09	-	-
	Refrigerated container units IP66/67					
59695	Combination switched socket refrigerated container 3P+E 415V a.c. 32A grey	EA	$843.66	$84.37	-	-
52936	Appliance inlet refrigerated container 3P+E 415V a.c. 32A grey	EA	$92.91	$9.29	-	10
52946	Straight plug refrigerated container 3P+E 415V a.c. 32A grey	EA	$153.10	$15.31	-	10
52986	Mobile socket refrigerated container 3P+E 415V a.c. 32A grey	EA	$136.73	$13.67	-	10

N New product | ECO Energy Saving products | More info available. See technical pages | COMING SOON Coming soon | Product to be discontinued

Whilst most items are stock lines some products are made to order. UoM = Unit Of Measure.
Prices are effective 1 June 2017 and are subject to change without notice. Trade prices exclude GST.

IEC industrial plugs and sockets

HYPRA IP66-67 plugs and appliance inlet

51110

51190

59477

51191

53056

53060

Cat.Nos	Angled plugs IP66/67	UoM	Trade price $	GST $	Box qty	Carton qty
	2P+E					
51106	Angled plug 2P+E 240V a.c. 16A grey	EA	$91.04	$9.10	-	10
53006	Angled plug 2P+E 240V a.c. 32A grey	EA	$182.10	$18.21	-	10
	3P+E					
51110	Angled plug 3P+E 415V a.c. 16A grey	EA	$144.95	$14.50	-	10
53010	Angled plug 3P+E 415V a.c. 32A grey	EA	$161.67	$16.17	-	10
	3P+N+E					
51111	Straight plug 3P+N+E 415V a.c. 16A grey	EA	$176.51	$17.65	-	10
53011	Angled plug 3P+N+E 415V a.c. 32A grey	EA	$200.68	$20.07	-	10
	Appliance inlet IP66/67					
	2P+E					
53086	Surface appliance inlet 2P+E 240V a.c. 32A grey	EA	$124.50	$12.45	-	10
59376	Surface appliance inlet 2P+E 240V a.c. 63A grey	EA	$151.15	$15.12	-	6
	3P+E					
51190	Surface appliance inlet 3P+E 415V a.c. 16A grey	EA	$109.08	$10.91	-	10
53090	Surface appliance inlet 3P+E 415V a.c. 32A grey	EA	$143.63	$14.36	-	10
59477	Straight panel appliance inlet 3P+E 415V a.c. 63A grey	EA	$198.87	$19.89	-	6
	3P+N+E					
51191	Surface appliance inlet 3P+N+E 415V a.c. 16A grey	EA	$124.50	$12.45	-	10
53091	Surface appliance inlet 3P+N+E 415V a.c. 32A grey	EA	$153.10	$15.31	-	10
59478	Straight panel appliance inlet 3P+N+E 415V a.c. 63A grey	EA	$211.69	$21.17	-	6
	Straight plugs IP66/67					
	2P+E					
53056	Straight plug 2P+E 240V a.c. 32A grey	EA	$170.95	$17.10	-	10
59346	Straight plug 2P+E 240V a.c. 63A grey	EA	$224.46	$22.45	-	5
	3P+E					
53060	Straight plug 3P+E 415V a.c. 32A grey	EA	$152.20	$15.22	-	10
59347	Straight plug 3P+E 240V a.c. 63A grey	EA	$231.50	$23.15	-	5
59447	Straight plug 3P+E 415V a.c. 63A grey	EA	$308.61	$30.86	-	5
	3P+N+E					
51161	Straight plug 3P+N+E 415V a.c. 16A grey	EA	$166.11	$16.61	5	20
53061	Straight plug 3P+N+E 415V a.c. 32A grey	EA	$175.02	$17.50	-	10
59448	Straight plug 3P+N+E 415V a.c. 63A grey	EA	$326.30	$32.63	-	5

N New product | ECO Energy Saving products | More info available. See technical pages | COMING SOON Coming soon | Product to be discontinued

Whilst most items are stock lines some products are made to order. UoM = Unit Of Measure.
Prices are effective 1 June 2017 and are subject to change without notice. Trade prices exclude GST.

IEC industrial plugs and sockets

HYPRA IP44/55 plugs

52762

52042

52243

Cat.Nos	Angled plugs IP44/55	UoM	Trade price $	GST $	Box qty	Carton qty
	2P+E					
52762	Angled plug 2P+E 240V a.c. 32A grey	EA	$90.50	$9.05	-	10
	Straight plugs IP44/55					
	2P+E					
52042	Straight plug 2P+E 240V a.c. 16A grey	EA	$56.51	$5.65	5	50
52742	Straight plug 2P+E 240V a.c. 32A grey	EA	$79.01	$7.90	-	20
	3P+E					
52243	Straight plug 3P+E 415V a.c. 16A grey	EA	$96.46	$9.65	5	50
52943	Straight plug 3P+E 415V a.c. 32A grey	EA	$115.21	$11.52	5	15
	3P+N+E					
52244	Straight plug 3P+N+E 415V a.c. 16A grey	EA	$101.28	$10.13	5	50
52944	Straight plug 3P+N+E 415V a.c. 32A grey	EA	$135.65	$13.56	15	20

IEC industrial plugs and sockets

HYPRA IP66-67 sockets

51180

51126

53050

Cat.Nos	Mobile sockets IP66/67	UoM	Trade price $	GST $	Box qty	Carton qty
	2P+E					
51176	Mobile socket 2P+E 240V a.c. 16A grey	EA	$115.39	$11.54	-	20
53076	Mobile socket 2P+E 240V a.c. 32A grey	EA	$244.73	$24.47	-	10
59386	Mobile socket 2P+E 240V a.c. 63A grey	EA	$265.09	$26.51	-	5
	3P+E					
51180	Mobile socket 3P+E 415V a.c. 16A grey	EA	$209.79	$20.98	-	12
53080	Mobile socket 3P+E 415V a.c. 32A grey	EA	$221.13	$22.11	-	10
59387	Mobile socket 3P+E 240V a.c. 63A grey	EA	$264.59	$26.46	-	5
59487	Mobile socket 3P+E 415V a.c. 63A grey	EA	$319.84	$31.98	-	5
	3P+N+E					
51181	Mobile socket 3P+N+E 415V a.c. 16A grey	EA	$227.28	$22.73	-	10
53081	Mobile socket 3P+N+E 415V a.c. 32A grey	EA	$231.15	$23.12	-	10
59488	Mobile socket 3P+N+E 415V a.c. 63A grey	EA	$376.15	$37.62	-	5
	Panel mount socket IP66/67					
	2P+E					
51126	Panel mount inclined socket 2P+E 240V a.c. 16A grey	EA	$113.92	$11.39	5	50
51146	Panel mount socket 2P+E 240V a.c. 16A grey	EA	$117.05	$11.70	-	30
53046	Panel mount socket 2P+E 240V a.c. 32A grey	EA	$133.25	$13.32	-	12
59326	Panel mount angled socket 2P+E 240V a.c. 63A grey	EA	$134.04	$13.40	-	10
	3P+E					
51130	Panel mount angled socket 3P+E 415V a.c. 16A grey	EA	$117.81	$11.78	-	12
51150	Panel mount socket 3P+E 415V a.c. 16A grey	EA	$120.79	$12.08	-	12
53050	Panel mount socket 3P+E 415V a.c. 32A grey	EA	$125.07	$12.51	-	12
59327	Panel mount angled socket 3P+E 240V a.c. 63A grey	EA	$134.73	$13.47	-	10
59427	Panel mount angled socket 3P+E 415V a.c. 63A grey	EA	$194.10	$19.41	-	10
	3P+N+E					
51131	Panel mount angled socket 3P+N+E 415V a.c. 16A grey	EA	$132.30	$13.23	-	12
51151	Panel mount socket 3P+N+E 415V a.c. 16A grey	EA	$132.73	$13.27	-	12
59428	Panel mount socket 3P+N+E 415V a.c. 63A grey	EA	$206.80	$20.68	-	10

N New product | ECO Energy Saving products | More info available. See technical pages | COMING SOON Coming soon | Product to be discontinued

Whilst most items are stock lines some products are made to order. UoM = Unit Of Measure.
Prices are effective 1 June 2017 and are subject to change without notice. Trade prices exclude GST.

IEC industrial plugs and sockets

HYPRA sockets

52283

52203

52702

Cat.Nos	Surface mount socket IP66/67	UoM	Trade price $	GST $	Box qty	Carton qty
	2P+E					
59336	Surface mount socket 2P+E 240V a.c. 63A grey	EA	$525.77	$52.58	-	-
	3P+E					
59337	Surface mount socket 3P+E 240V a.c. 63A grey	EA	$529.33	$52.93	-	-
59437	Surface mount socket 3P+E 415V a.c. 63A grey	EA	$525.22	$52.52	-	-
	3P+N+E					
52229	Surface mount socket 3P+N+E 415V a.c. 16A grey	EA	$46.26	$4.63	5	50
53051	Surface mount socket 3P+N+E 415V a.c. 32A grey	EA	$138.98	$13.90	-	12
59438	Surface mount socket 3P+N+E 415V a.c. 63A grey	EA	$555.33	$55.53	-	-
	Mobile sockets IP44/55					
	2P+E					
52082	Mobile socket 2P+E 240V a.c. 16A grey	EA	$81.03	$8.10	5	50
52782	Mobile socket 2P+E 240V a.c. 32A grey	EA	$113.35	$11.34	-	10
	3P+E					
52283	Mobile socket 3P+E 415V a.c. 16A grey	EA	$154.43	$15.44	5	50
52983	Mobile socket 3P+E 415V a.c. 32A grey	EA	$181.54	$18.15	-	10
	3P+N+E					
52284	Mobile socket 3P+N+E 415V a.c. 16A grey	EA	$178.00	$17.80	-	20
52984	Mobile socket 3P+N+E 415V a.c. 32A grey	EA	$220.21	$22.02	-	12
	Panel mount socket IP44/55					
	3P+E					
52203	Panel mount socket 3P+E 415V a.c. 16A grey	EA	$277.68	$27.77	-	10
52919	Panel mount socket 3P+E 415V a.c. 32A grey	EA	$91.83	$9.18	-	12
	3P+N+E					
52920	Panel mount socket 3P+N+E 415V a.c. 32A grey	EA	$117.81	$11.78	-	12
	Surface mount socket IP44/45					
	2P+E					
52702	Surface mount socket 2P+E 240V a.c. 32A grey	EA	$414.93	$41.49	-	6
	3P+E					
52940	Surface mount socket 3P+E 415V a.c. 32A grey	EA	$100.63	$10.06	-	10
52949	Surface mount socket 3P+E 415V a.c. 32A grey	EA	$71.97	$7.20	-	10

N New product | ECO Energy Saving products | More info available. See technical pages | COMING SOON Coming soon | Product to be discontinued

Whilst most items are stock lines some products are made to order. UoM = Unit Of Measure.
Prices are effective 1 June 2017 and are subject to change without notice. Trade prices exclude GST.

Industrial enclosures and equipment

Industrial plastic boxes IP23/IP55/IP66

WS44

35941

92100

92122

35013

Cat.Nos	IP23 plastic boxes	UoM	Trade price $	GST $	Box qty	Carton qty
WS44	Flush mount IP23 130x130x74mm plastic grey/clear lid	EA	$32.14	$3.21	-	30
WS44S	Surface mount IP23 153x104x82mm plastic grey/clear lid	EA	$43.72	$4.37	-	30
	IP55 plastic boxes					
35043	Plastic box 265Hx174Wx154Dmm no knock-outs IP55	EA	$142.77	$14.28	-	2
35054	Plastic box 310Hx240Wx160Dmm no knock-outs IP55	EA	$196.34	$19.63	-	-
35058	Plastic box 359Hx265Wx154Dmm no knock-outs IP55	EA	$232.53	$23.25	-	-
35900	Plastic box 130Hx75Wx74Dmm no knock-outs IP55	EA	$30.47	$3.05	-	10
35901	Plastic box 130Hx75Wx74Dmm transparent cover no knock-outs IP55	EA	$36.21	$3.62	-	10
35930	Plastic box 130Hx130Wx74Dmm no knock-outs IP55	EA	$38.05	$3.80	-	10
35931	Plastic box 130Hx130Wx74Dmm transparent cover no knock-outs IP55	EA	$45.62	$4.56	-	10
35940	Plastic box 155Hx110Wx74Dmm no knock-outs IP55	EA	$37.15	$3.72	-	10
35941	Plastic box 155Hx110Wx74Dmm transparent cover no knock-outs IP55	EA	$45.62	$4.56	-	10
35950	Plastic box 180Hx140Wx86Dmm no knock-outs IP55	EA	$43.66	$4.37	-	5
35951	Plastic box 180Hx140Wx86Dmm transparent cover no knock-outs IP55	EA	$54.29	$5.43	-	5
35960	Plastic box 220Hx170Wx86Dmm no knock-outs IP55	EA	$55.74	$5.57	-	5
35970	Plastic box 270Hx170Wx86Dmm no knock-outs IP55	EA	$83.69	$8.37	-	2
35971	Plastic box 270Hx170Wx86Dmm transparent cover no knock-outs IP55	EA	$95.15	$9.52	-	2
35980	Plastic box 310Hx240Wx124Dmm no knock-outs IP55	EA	$139.45	$13.94	-	2
35981	Plastic box 310Hx240Wx124Dmm transparent cover no knock-outs IP55	EA	$153.36	$15.34	-	2
35990	Plastic box 360Hx270Wx124Dmm no knock-outs IP55	EA	$176.62	$17.66	-	-
35991	Plastic box 360Hx270Wx124Dmm transparent cover no knock-outs IP55	EA	$199.86	$19.99	-	-
	IP55 junction boxes					
092001	Junction box plastic round 60x40mm with 4 cable glands IP55	EA	$6.35	$0.64	5	100
92122	Junction box plastic 220Hx170Wx140Dmm undrilled IP55	EA	$77.74	$7.77	-	2
092024	Junction box plastic 105Hx105Wx55Dmm with knock-outs IP55	EA	$15.75	$1.58	5	30
092020	Junction box plastic 105Hx105Wx55Dmm undrilled IP55	EA	$14.80	$1.48	5	50
	IP66 plastic boxes					
35007	Plastic box 130Hx75Wx74Dmm no knock-outs IP66	EA	$38.05	$3.80	-	10
35013	Plastic box 130Hx130Wx74Dmm no knock-outs IP66	EA	$47.65	$4.76	-	10
35017	Plastic box 155Hx110Wx74Dmm no knock-outs IP66	EA	$47.65	$4.76	-	10
35022	Plastic box 180Hx140Wx86Dmm no knock-outs IP66	EA	$57.07	$5.71	-	5
35028	Plastic box 220Hx170Wx86Dmm no knock-outs IP66	EA	$76.09	$7.61	-	5

N New product | ECO Energy Saving products | More info available. See technical pages | COMING SOON Coming soon | Product to be discontinued

Whilst most items are stock lines some products are made to order. UoM = Unit Of Measure.
Prices are effective 1 June 2017 and are subject to change without notice. Trade prices exclude GST.

Industrial enclosures and equipment

Industrial plastic boxes IP55/IP66, accessories

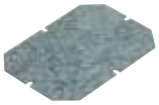
35810

35814

35802

34221

Cat.Nos	IP66 plastic boxes	UoM	Trade price $	GST $	Box qty	Carton qty
35033	Plastic box 270Hx170Wx86Dmm no knock-outs IP66	EA	$104.73	$10.47	-	2
35044	Plastic box 310Hx240Wx124Dmm no knock-outs IP66	EA	$171.22	$17.12	-	2
35047	Plastic box 360Hx270Wx124Dmm no knock-outs IP66	EA	$218.86	$21.89	-	-
	Accessories					
	Metal mounting plates - 1.5mm thickness					
35810	130x130mm for IP55/66 plastic boxes 350xx/359xx series	EA	$17.01	$1.70	5	60
35811	155x110mm for IP55/66 plastic boxes 350xx/359xx series	EA	$17.17	$1.72	5	50
35812	180x140mm for IP55/66 plastic boxes 350xx/359xx series	EA	$19.95	$2.00	5	40
35813	220x170mm for IP55/66 plastic boxes 350xx/359xx series	EA	$24.76	$2.48	5	30
35814	270x170mm for IP55/66 plastic boxes 350xx/359xx series	EA	$26.60	$2.66	5	20
35815	310x240mm for IP55/66 plastic boxes 350xx/359xx series	EA	$32.32	$3.23	5	10
35816	360x270mm for IP55/66 plastic boxes 350xx/359xx series	EA	$40.79	$4.08	5	10
	Wall lugs					
35802	Wall lugs for enclosures with a width above 110mm set of 4	EA	$19.03	$1.90	-	10
	Hinges					
35800	Hinges UV protected polymaide for 130X130 to 270X170mm enclosures	EA	$16.48	$1.65	-	20
35801	Hinges UV protected polymaide for 310x240 to 360x270mm enclosures	EA	$21.98	$2.20	-	20
	Plastic conduit entry fittings for weatherproof boxes					
C20S20P	Adaptor 20mm threaded conduit to box with 20mm plain entry white	EA	$3.21	$0.32	25	-
C25S25P	Adaptor 25mm threaded conduit to box with 25mm plain entry white	EA	$4.01	$0.40	25	-
C20PS25P	Adaptor 20mm plain/threaded conduit to box with 25mm plain entry white	EA	$4.23	$0.42	25	-
	Terminal Strips					
34221	White terminal strip 4mm²	EA	$9.10	$0.91	10	-

N New product | ECO Energy Saving products | More info available. See technical pages | COMING SOON Coming soon | Product to be discontinued

Whilst most items are stock lines some products are made to order. UoM = Unit Of Measure.
Prices are effective 1 June 2017 and are subject to change without notice. Trade prices exclude GST.

Cable ducting

Duct with cover

36201

636106

636117

Cat.Nos	Duct with cover - 2 metre length	UoM	Trade price $	GST $	Box qty	Carton qty
	Lina 25 blue					
36201	25x40mm 2m 12.5mm finger DIN pitch with cover blue	LEN	$24.28	$2.43	-	56*
36213	60x80mm 2m 12.5mm finger DIN pitch with cover blue	LEN	$38.01	$3.80	-	56*
	Transcab grey					
636095	15x25mm 2m 12.5mm finger DIN pitch with cover grey	LEN	$50.87	$5.09	-	32*
636096	15x40mm 2m 12.5mm finger DIN pitch with cover grey	LEN	$52.75	$5.28	-	40*
636100	25x25mm 2m 12.5mm finger DIN pitch with cover grey	LEN	$23.91	$2.39	-	60*
636101	25x40mm 2m 12.5mm finger DIN pitch with cover grey	LEN	$24.71	$2.47	-	56*
636102	25x60mm 2m 12.5mm finger DIN pitch with cover grey	LEN	$25.78	$2.58	-	56*
636103	25x80mm 2m 12.5mm finger DIN pitch with cover grey	LEN	$30.09	$3.01	-	40*
636105	40x25mm 2m 12.5mm finger DIN pitch with cover grey	LEN	$28.82	$2.88	-	56*
636106	40x40mm 2m 12.5mm finger DIN pitch with cover grey	LEN	$28.25	$2.82	-	48*
636107	40x60mm 2m 12.5mm finger DIN pitch with cover grey	LEN	$27.85	$2.78	-	48*
636108	40x80mm 2m 12.5mm finger DIN pitch with cover grey	LEN	$30.81	$3.08	-	20*
636109	40x100mm 2m 12.5mm finger DIN pitch with cover grey	LEN	$43.25	$4.32	-	24*
636111	60x40mm 2m 12.5mm finger DIN pitch with cover grey	LEN	$35.38	$3.54	-	32*
636112	60x60mm 2m 12.5mm finger DIN pitch with cover grey	LEN	$34.29	$3.43	-	32*
636113	60x80mm 2m 12.5mm finger DIN pitch with cover grey	LEN	$37.12	$3.71	-	32*
636114	60x100mm 2m 12.5mm finger DIN pitch with cover grey	LEN	$55.73	$5.57	-	24*
636115	80x40mm 2m 12.5mm finger DIN pitch with cover grey	LEN	$77.56	$7.76	-	24*
636116	80x60mm 2m 12.5mm finger DIN pitch with cover grey	LEN	$50.08	$5.01	-	24*
636117	80x80mm 2m 12.5mm finger DIN pitch with cover grey	LEN	$53.41	$5.34	-	24*
636118	80x100mm 2m 12.5mm finger DIN pitch with cover grey	LEN	$73.35	$7.34	-	20*
636119	100x40mm 2m 12.5mm finger DIN pitch with cover grey	LEN	$98.63	$9.86	-	24*
636120	100x60mm 2m 12.5mm finger DIN pitch with cover grey	LEN	$61.80	$6.18	-	24*
636121	100x80mm 2m 12.5mm finger DIN pitch with cover grey	LEN	$58.89	$5.89	-	16*
636122	100x100mm 2m 12.5mm finger DIN pitch with cover grey	LEN	$81.16	$8.12	-	16*
636123	150x100mm 2m 12.5mm finger DIN pitch with cover grey	LEN	$106.63	$10.66	-	12*
636124	120x60mm 2m 12.5mm finger DIN pitch with cover grey	LEN	$92.56	$9.26	-	16*
636125	120x80mm 2m 12.5mm finger DIN pitch with cover grey	LEN	$79.67	$7.97	-	16*

*Number of metres per pack

N New product | ECO Energy Saving products | More info available. See technical pages | COMING SOON Coming soon | Product to be discontinued

Whilst most items are stock lines some products are made to order. UoM = Unit Of Measure.
Prices are effective 1 June 2017 and are subject to change without notice. Trade prices exclude GST.

Cable ducting

Duct with cover

636207

636212

636178

Cat.Nos	Duct with cover - 2 metre length	UoM	Trade price $	GST $	Box qty	Carton qty
	Transcab halogen free light grey					
636206	Halogen free PVC 40x40mm 2m	LEN	$86.36	$8.64	-	48*
636207	Halogen free PVC 40x60mm 2m	LEN	$91.13	$9.11	-	48*
636212	Halogen free PVC 60x60mm 2m	LEN	$111.34	$11.13	-	32*
	Accessories					
636177	Spiral binding 6mm 25m rolls	RL	$64.63	$6.46	-	250*
636178	Spiral binding 12mm 25m rolls	RL	$158.45	$15.84	-	250*

*Number of metres per pack

N New product | ECO Energy Saving products | More info available. See technical pages | COMING SOON Coming soon | Product to be discontinued

Whilst most items are stock lines some products are made to order. UoM = Unit Of Measure.
Prices are effective 1 June 2017 and are subject to change without notice. Trade prices exclude GST.

Marking system

CAB3 Cable markers

38106

38110

38128

Cat.Nos	Markers for terminal blocks and wiring 0.15 to 0.5mm²	UoM	Trade price $	GST $	Box qty	Carton qty
	Numbers - colour code					
38100	0.15-0.5mm² black number 0 pack of 1000	PAK	$85.42	$8.54	-	50000
38101	0.15-0.5mm² brown number 1 pack of 1000	PAK	$85.42	$8.54	-	50000
38102	0.15-0.5mm² red number 2 pack of 1000	PAK	$85.42	$8.54	-	50000
38103	0.15-0.5mm² orange number 3 pack of 1000	PAK	$85.42	$8.54	-	50000
38104	0.15-0.5mm² yellow number 4 pack of 1000	PAK	$85.42	$8.54	-	50000
38105	0.15-0.5mm² green number 5 pack of 1000	PAK	$85.42	$8.54	-	50000
38106	0.15-0.5mm² blue number 6 pack of 1000	PAK	$85.42	$8.54	-	50000
38107	0.15-0.5mm² purple number 7 pack of 1000	PAK	$85.42	$8.54	-	50000
38108	0.15-0.5mm² grey number 8 pack of 1000	PAK	$85.42	$8.54	-	50000
38109	0.15-0.5mm² white number 9 pack of 1000	PAK	$85.42	$8.54	-	50000
	Black letters on yellow background					
38110	0.15-0.5mm² letter A pack of 300	PAK	$25.48	$2.55	-	30000
38111	0.15-0.5mm² letter B pack of 300	PAK	$25.13	$2.51	-	30000
38112	0.15-0.5mm² letter C pack of 300	PAK	$25.13	$2.51	-	30000
38113	0.15-0.5mm² letter D pack of 300	PAK	$25.48	$2.55	-	30000
38114	0.15-0.5mm² letter E pack of 300	PAK	$25.48	$2.55	-	30000
38115	0.15-0.5mm² letter F pack of 300	PAK	$25.48	$2.55	-	30000
38116	0.15-0.5mm² letter G pack of 300	PAK	$25.48	$2.55	-	30000
38117	0.15-0.5mm² letter H pack of 300	PAK	$25.48	$2.55	-	30000
38118	0.15-0.5mm² letter I pack of 300	PAK	$25.48	$2.55	-	30000
38119	0.15-0.5mm² letter J pack of 300	PAK	$25.48	$2.55	-	30000
38120	0.15-0.5mm² letter K pack of 300	PAK	$25.13	$2.51	-	30000
38121	0.15-0.5mm² letter L pack of 300	PAK	$25.48	$2.55	-	30000
38122	0.15-0.5mm² letter M pack of 300	PAK	$25.13	$2.51	-	30000
38123	0.15-0.5mm² letter N pack of 300	PAK	$25.48	$2.55	-	30000
38124	0.15-0.5mm² letter O pack of 300	PAK	$25.48	$2.55	-	30000
38125	0.15-0.5mm² letter P pack of 300	PAK	$25.48	$2.55	-	30000
38126	0.15-0.5mm² letter Q pack of 300	EA	$27.10	$2.71	-	30000
38127	0.15-0.5mm² letter R pack of 300	PAK	$25.48	$2.55	-	30000
38128	0.15-0.5mm² letter S pack of 300	PAK	$25.48	$2.55	-	30000
38129	0.15-0.5mm² letter T pack of 300	PAK	$25.48	$2.55	-	30000
38130	0.15-0.5mm² letter U pack of 300	PAK	$25.48	$2.55	-	30000

N New product | ECO Energy Saving products | More info available. See technical pages | COMING SOON Coming soon | Product to be discontinued

Whilst most items are stock lines some products are made to order. UoM = Unit Of Measure.
Prices are effective 1 June 2017 and are subject to change without notice. Trade prices exclude GST.

Marking system

CAB3 Cable markers

38140

38143

38212

Cat.Nos	Markers for terminal blocks and wiring 0.15 to 0.5mm²	UoM	Trade price $	GST $	Box qty	Carton qty
	Black letters on yellow background					
38131	0.15-0.5mm² letter V pack of 300	PAK	$25.13	$2.51	-	30000
38132	0.15-0.5mm² letter W pack of 300	PAK	$25.48	$2.55	-	30000
38133	0.15-0.5mm² letter Y pack of 300	PAK	$25.13	$2.51	-	30000
38134	0.15-0.5mm² letter X pack of 300	PAK	$25.48	$2.55	-	30000
38135	0.15-0.5mm² letter Z pack of 300	PAK	$25.48	$2.55	-	30000
	Black symbols on yellow background					
38140	0.15-0.5mm² symbol / pack of 300	PAK	$25.48	$2.55	-	30000
38141	0.15-0.5mm² symbol . pack of 300	PAK	$25.48	$2.55	-	30000
38142	0.15-0.5mm² symbol + pack of 300	PAK	$25.48	$2.55	-	30000
38143	0.15-0.5mm² symbol - pack of 300	PAK	$25.48	$2.55	-	30000
38144	0.15-0.5mm² symbol ~ pack of 300	PAK	$25.48	$2.55	-	30000
38145	0.15-0.5mm² symbol DC pack of 300	PAK	$25.48	$2.55	-	30000
38146	0.15-0.5mm² symbol earth pack of 300	PAK	$25.48	$2.55	-	30000
	Markers for terminal blocks and wiring 0.5 to 1.5mm²					
	Numbers - colour code					
38210	0.5-1.5mm² black number 0 pack of 1200	PAK	$102.52	$10.25	-	60000
38211	0.5-1.5mm² brown number 1 pack of 1200	PAK	$102.52	$10.25	-	60000
38212	0.5-1.5mm² red number 2 pack of 1200	PAK	$102.52	$10.25	-	60000
38213	0.5-1.5mm² orange number 3 pack of 1200	PAK	$102.52	$10.25	-	60000
38214	0.5-1.5mm² yellow number 4 pack of 1200	PAK	$102.52	$10.25	-	60000
38215	0.5-1.5mm² green number 5 pack of 1200	PAK	$102.52	$10.25	-	60000
38216	0.5-1.5mm² blue number 6 pack of 1200	PAK	$102.52	$10.25	-	60000
38217	0.5-1.5mm² purple number 7 pack of 1200	PAK	$102.52	$10.25	-	60000
38218	0.5-1.5mm² grey number 8 pack of 1200	PAK	$102.52	$10.25	-	60000
38219	0.5-1.5mm² white number 9 pack of 1200	PAK	$102.52	$10.25	-	60000
	Black letters on yellow background					
38300	0.5-1.5mm² letter A pack of 300	PAK	$25.13	$2.51	-	30000
38301	0.5-1.5mm² letter B pack of 300	PAK	$25.13	$2.51	-	30000
38302	0.5-1.5mm² letter C pack of 300	PAK	$25.13	$2.51	-	30000
38303	0.5-1.5mm² letter D pack of 300	PAK	$25.13	$2.51	-	30000
38304	0.5-1.5mm² letter E pack of 300	PAK	$25.13	$2.51	-	30000

N New product | ECO Energy Saving products | More info available. See technical pages | COMING SOON Coming soon | Product to be discontinued

Whilst most items are stock lines some products are made to order. UoM = Unit Of Measure.
Prices are effective 1 June 2017 and are subject to change without notice. Trade prices exclude GST.

Marking system

CAB3 Cable markers

38312

38317

38272

Cat.Nos	Markers for terminal blocks and wiring 0.5 to 1.5mm²	UoM	Trade price $	GST $	Box qty	Carton qty
	Black letters on yellow background					
38305	0.5-1.5mm² letter F pack of 300	PAK	$25.13	$2.51	-	30000
38306	0.5-1.5mm² letter G pack of 300	PAK	$25.13	$2.51	-	30000
38307	0.5-1.5mm² letter H pack of 300	PAK	$25.13	$2.51	-	30000
38308	0.5-1.5mm² letter I pack of 300	PAK	$25.13	$2.51	-	30000
38309	0.5-1.5mm² letter J pack of 300	PAK	$25.13	$2.51	-	30000
38310	0.5-1.5mm² letter K pack of 300	PAK	$25.13	$2.51	-	30000
38311	0.5-1.5mm² letter L pack of 300	PAK	$25.13	$2.51	-	30000
38312	0.5-1.5mm² letter M pack of 300	PAK	$25.13	$2.51	-	30000
38313	0.5-1.5mm² letter N pack of 300	PAK	$25.13	$2.51	-	30000
38314	0.5-1.5mm² letter O pack of 300	PAK	$25.13	$2.51	-	30000
38315	0.5-1.5mm² letter P pack of 300	PAK	$25.13	$2.51	-	30000
38316	0.5-1.5mm² letter Q pack of 300	PAK	$25.13	$2.51	-	30000
38317	0.5-1.5mm² letter R pack of 300	PAK	$25.13	$2.51	-	30000
38318	0.5-1.5mm² letter S pack of 300	PAK	$25.13	$2.51	-	30000
38319	0.5-1.5mm² letter T pack of 300	PAK	$25.13	$2.51	-	30000
38320	0.5-1.5mm² letter U pack of 300	PAK	$25.13	$2.51	-	30000
38321	0.5-1.5mm² letter V pack of 300	PAK	$25.13	$2.51	-	30000
38322	0.5-1.5mm² letter W pack of 300	PAK	$25.13	$2.51	-	30000
38323	0.5-1.5mm² letter Y pack of 300	PAK	$25.13	$2.51	-	30000
38324	0.5-1.5mm² letter X pack of 300	PAK	$25.13	$2.51	-	30000
38325	0.5-1.5mm² letter Z pack of 300	PAK	$25.13	$2.51	-	30000
	Black symbols on yellow background					
38270	0.5-1.5mm² symbol / pack of 300	PAK	$25.13	$2.51	-	30000
38271	0.5-1.5mm² symbol . pack of 300	PAK	$25.13	$2.51	-	30000
38272	0.5-1.5mm² symbol + pack of 300	PAK	$25.13	$2.51	-	30000
38273	0.5-1.5mm² symbol - pack of 300	PAK	$25.13	$2.51	-	30000
38274	0.5-1.5mm² symbol ~ pack of 300	PAK	$25.48	$2.55	-	30000
38275	0.5-1.5mm² symbol DC pack of 300	PAK	$25.48	$2.55	-	30000
38276	0.5-1.5mm² symbol earth pack of 300	PAK	$25.13	$2.51	-	30000

N New product | ECO Energy Saving products | More info available. See technical pages | COMING SOON Coming soon | Product to be discontinued

Whilst most items are stock lines some products are made to order. UoM = Unit Of Measure.
Prices are effective 1 June 2017 and are subject to change without notice. Trade prices exclude GST.

Marking system

CAB3 Cable markers

38226

38229

38332

38346

Cat.Nos	Markers for wiring 1.5 to 2.5 mm²	UoM	Trade price $	GST $	Box qty	Carton qty
	Numbers - colour code					
38220	1.5-2.5mm² black number 0 pack of 1200	PAK	$102.52	$10.25	-	60000
38221	1.5-2.5mm² brown number 1 pack of 1200	PAK	$102.52	$10.25	-	60000
38222	1.5-2.5mm² red number 2 pack of 1200	PAK	$102.52	$10.25	-	60000
38223	1.5-2.5mm² orange number 3 pack of 1200	PAK	$102.52	$10.25	-	60000
38224	1.5-2.5mm² yellow number 4 pack of 1200	PAK	$102.52	$10.25	-	60000
38225	1.5-2.5mm² green number 5 pack of 1200	PAK	$102.52	$10.25	-	60000
38226	1.5-2.5mm² blue number 6 pack of 1200	PAK	$102.52	$10.25	-	60000
38227	1.5-2.5mm² purple number 7 pack of 1200	PAK	$102.52	$10.25	-	60000
38228	1.5-2.5mm² grey number 8 pack of 1200	PAK	$102.52	$10.25	-	60000
38229	1.5-2.5mm² white number 9 pack of 1200	PAK	$102.52	$10.25	-	60000
	Black letters on yellow background					
38330	1.5-2.5mm² letter A pack of 300	PAK	$25.13	$2.51	-	30000
38331	1.5-2.5mm² letter B pack of 300	PAK	$25.13	$2.51	-	30000
38332	1.5-2.5mm² letter C pack of 300	PAK	$25.13	$2.51	-	30000
38333	1.5-2.5mm² letter D pack of 300	PAK	$25.13	$2.51	-	30000
38334	1.5-2.5mm² letter E pack of 300	PAK	$25.48	$2.55	-	30000
38335	1.5-2.5mm² letter F pack of 300	PAK	$25.13	$2.51	-	30000
38336	1.5-2.5mm² letter G pack of 300	PAK	$25.13	$2.51	-	30000
38337	1.5-2.5mm² letter H pack of 300	PAK	$25.13	$2.51	-	30000
38338	1.5-2.5mm² letter I pack of 300	PAK	$25.13	$2.51	-	30000
38339	1.5-2.5mm² letter J pack of 300	PAK	$25.13	$2.51	-	30000
38340	1.5-2.5mm² letter K pack of 300	PAK	$25.13	$2.51	-	30000
38341	1.5-2.5mm² letter L pack of 300	PAK	$25.13	$2.51	-	30000
38342	1.5-2.5mm² letter M pack of 300	PAK	$25.13	$2.51	-	30000
38343	1.5-2.5mm² letter N pack of 300	PAK	$25.13	$2.51	-	30000
38344	1.5-2.5mm² letter O pack of 300	PAK	$25.13	$2.51	-	30000
38345	1.5-2.5mm² letter P pack of 300	PAK	$25.13	$2.51	-	30000
38346	1.5-2.5mm² letter Q pack of 300	PAK	$25.13	$2.51	-	30000
38347	1.5-2.5mm² letter R pack of 300	PAK	$25.13	$2.51	-	30000
38348	1.5-2.5mm² letter S pack of 300	PAK	$25.13	$2.51	-	30000
38349	1.5-2.5mm² letter T pack of 300	PAK	$25.13	$2.51	-	30000
38350	1.5-2.5mm² letter U pack of 300	PAK	$25.13	$2.51	-	30000
38351	1.5-2.5mm² letter V pack of 300	PAK	$25.13	$2.51	-	30000

N New product | ECO Energy Saving products | More info available. See technical pages | COMING SOON Coming soon | Product to be discontinued

Whilst most items are stock lines some products are made to order. UoM = Unit Of Measure.
Prices are effective 1 June 2017 and are subject to change without notice. Trade prices exclude GST.

Marking system

CAB3 Cable markers

38353

38235

38364

Cat.Nos	Markers for wiring 1.5 to 2.5mm²	UoM	Trade price $	GST $	Box qty	Carton qty
	Black letters on yellow background					
38352	1.5-2.5mm² letter W pack of 300	PAK	$25.13	$2.51	-	30000
38353	1.5-2.5mm² letter Y pack of 300	PAK	$25.13	$2.51	-	30000
38354	1.5-2.5mm² letter X pack of 300	PAK	$25.13	$2.51	-	30000
38355	1.5-2.5mm² letter Z pack of 300	PAK	$25.13	$2.51	-	30000
	Black symbols on yellow background					
38280	1.5-2.5mm² symbol / pack of 300	PAK	$25.48	$2.55	-	30000
38281	1.5-2.5mm² symbol . pack of 300	PAK	$25.48	$2.55	-	30000
38282	1.5-2.5mm² symbol + pack of 300	PAK	$25.13	$2.51	-	30000
38283	1.5-2.5mm² symbol - pack of 300	PAK	$25.13	$2.51	-	30000
38284	1.5-2.5mm² symbol ~ pack of 300	PAK	$25.48	$2.55	-	30000
38285	1.5-2.5mm² symbol DC pack of 300	PAK	$25.13	$2.51	-	30000
38286	1.5-2.5mm² symbol earth pack of 300	PAK	$25.13	$2.51	-	30000
	Markers for wiring 4 to 6mm²					
	Numbers - colour code					
38230	4-6mm² black number 0 pack of 800	PAK	$126.72	$12.67	-	40000
38231	4-6mm² brown number 1 pack of 800	PAK	$126.72	$12.67	-	40000
38232	4-6mm² red number 2 pack of 800	PAK	$126.72	$12.67	-	40000
38233	4-6mm² orange number 3 pack of 800	PAK	$126.72	$12.67	-	40000
38234	4-6mm² yellow number 4 pack of 800	PAK	$126.72	$12.67	-	40000
38235	4-6mm² green number 5 pack of 800	PAK	$126.72	$12.67	-	40000
38236	4-6mm² blue number 6 pack of 800	PAK	$126.72	$12.67	-	40000
38237	4-6mm² purple number 7 pack of 800	PAK	$126.72	$12.67	-	40000
38238	4-6mm² grey number 8 pack of 800	PAK	$126.72	$12.67	-	40000
38239	4-6mm² white number 9 pack of 800	PAK	$126.72	$12.67	-	40000
	Black letters on yellow background					
38360	4-6mm² letter A pack of 300	PAK	$47.32	$4.73	-	30000
38361	4-6mm² letter B pack of 300	PAK	$47.32	$4.73	-	30000
38362	4-6mm² letter C pack of 300	PAK	$47.32	$4.73	-	30000
38363	4-6mm² letter D pack of 300	PAK	$47.32	$4.73	-	30000
38364	4-6mm² letter E pack of 300	PAK	$47.32	$4.73	-	30000
38365	4-6mm² letter F pack of 300	PAK	$47.32	$4.73	-	30000

N New product | ECO Energy Saving products | More info available. See technical pages | COMING SOON Coming soon | Product to be discontinued

Whilst most items are stock lines some products are made to order. UoM = Unit Of Measure.
Prices are effective 1 June 2017 and are subject to change without notice. Trade prices exclude GST.

Marking system

CAB3 Cable markers

38366

38290

38294

Cat.Nos	Markers for wiring 4 to 6mm²	UoM	Trade price $	GST $	Box qty	Carton qty
	Numbers - colour code					
38366	4-6mm² letter G pack of 300	PAK	$47.32	$4.73	-	30000
38367	4-6mm² letter H pack of 300	PAK	$47.32	$4.73	-	30000
38368	4-6mm² letter I pack of 300	PAK	$47.32	$4.73	-	30000
38369	4-6mm² letter J pack of 300	PAK	$47.32	$4.73	-	30000
38370	4-6mm² letter K pack of 300	PAK	$47.32	$4.73	-	30000
38371	4-6mm² letter L pack of 300	PAK	$47.32	$4.73	-	30000
38372	4-6mm² letter M pack of 300	PAK	$47.32	$4.73	-	30000
38373	4-6mm² letter N pack of 300	PAK	$47.32	$4.73	-	30000
38374	4-6mm² letter O pack of 300	PAK	$47.32	$4.73	-	30000
38375	4-6mm² letter P pack of 300	PAK	$47.32	$4.73	-	30000
38376	4-6mm² letter Q pack of 300	PAK	$47.32	$4.73	-	30000
38377	4-6mm² letter R pack of 300	PAK	$47.32	$4.73	-	30000
38378	4-6mm² letter S pack of 300	PAK	$47.32	$4.73	-	30000
38379	4-6mm² letter T pack of 300	PAK	$47.32	$4.73	-	30000
38380	4-6mm² letter U pack of 300	PAK	$47.32	$4.73	-	30000
38381	4-6mm² letter V pack of 300	PAK	$47.32	$4.73	-	30000
38382	4-6mm² letter W pack of 300	PAK	$47.32	$4.73	-	30000
38383	4-6mm² letter Y pack of 300	PAK	$47.32	$4.73	-	30000
38384	4-6mm² letter X pack of 300	PAK	$47.32	$4.73	-	30000
38385	4-6mm² letter Z pack of 300	PAK	$47.32	$4.73	-	30000
	Black symbols on yellow background					
38290	4-6mm² symbol / pack of 300	PAK	$47.32	$4.73	-	30000
38291	4-6mm² symbol . pack of 300	PAK	$47.32	$4.73	-	30000
38292	4-6mm² symbol + pack of 300	PAK	$47.32	$4.73	-	30000
38293	4-6mm² symbol - pack of 300	PAK	$47.32	$4.73	-	30000
38294	4-6mm² symbol ~ pack of 300	PAK	$47.32	$4.73	-	30000
38295	4-6mm² symbol DC pack of 300	PAK	$47.32	$4.73	-	30000
38296	4-6mm² symbol earth pack of 300	PAK	$47.32	$4.73	-	30000

N New product | ECO Energy Saving products | More info available. See technical pages | COMING SOON Coming soon | Product to be discontinued

Whilst most items are stock lines some products are made to order. UoM = Unit Of Measure.
Prices are effective 1 June 2017 and are subject to change without notice. Trade prices exclude GST.

Marking system

CAB3 Cable markers, Accessories

38490

38492

38397

38392

Cat.Nos	Set of markers (digits)	UoM	Trade price $	GST $	Box qty	Carton qty
38201	0.15-0.5mm² (250 digits from 0 to 9) pack of 2500 markers + 10 applicators	EA	$316.92	$31.69	-	8
38202	0.5-1.5mm² (250 digits from 0 to 9) pack of 3000 markers + 10 applicators	EA	$316.92	$31.69	-	8
38203	1.5-2.5mm² (250 digits from 0 to 9) pack of 3000 markers + 10 applicators	EA	$316.92	$31.69	-	8
38204	4-6mm² (250 digits from 0 to 9) pack of 2000 markers + 10 applicators	EA	$412.13	$41.21	-	8
	Black marker holders					
38490	For cable cross section 10-16mm² black pack of 100	PAK	$39.24	$3.92	-	2400
38491	For cable cross section 25-35mm² black pack of 50	PAK	$26.66	$2.67	-	1200
38492	For cable cross section 50-70mm² black pack of 50	PAK	$67.21	$6.72	-	500
	Transporter					
38394	For 0.15-0.5mm² markers transparent snap-on	EA	$7.13	$0.71	10	500
38395	For 0.5-1.5mm² markers transparent snap-on	EA	$7.13	$0.71	10	500
38396	For 1.5-2.5mm² markers transparent snap-on	EA	$7.13	$0.71	10	500
38397	For 4-6mm² markers transparent snap-on	EA	$7.23	$0.72	10	500
	Marker support					
38392	7 markers 0.15-0.5mm² - 8 markers 0.5-1.5mm²	PAK	$52.54	$5.25	100	1000

N New product | ECO Energy Saving products | More info available. See technical pages | COMING SOON Coming soon | Product to be discontinued

Whilst most items are stock lines some products are made to order. UoM = Unit Of Measure.
Prices are effective 1 June 2017 and are subject to change without notice. Trade prices exclude GST.

Marking system

MEMOCAB Cable marking

37801

37780

37827

Cat.Nos	Markers for wiring	UoM	Trade price $	GST $	Box qty	Carton qty
	Numbers - colour code					
37801	2.5x2.5mm purple number 7 slide-in pack of 600	PAK	$67.83	$6.78	-	30000
37802	2.5x2.5mm orange number 3 slide-in pack of 600	PAK	$67.83	$6.78	-	30000
37803	2.5x2.5mm white number 9 slide-in pack of 600	PAK	$67.83	$6.78	-	30000
37804	2.5x2.5mm grey number 8 slide-in pack of 600	PAK	$67.83	$6.78	-	30000
37805	2.5x2.5mm green number 5 slide-in pack of 600	PAK	$67.83	$6.78	-	30000
37806	2.5x2.5mm yellow number 4 slide-in pack of 600	PAK	$67.83	$6.78	-	30000
37807	2.5x2.5mm brown number 1 slide-in pack of 600	PAK	$67.83	$6.78	-	30000
37808	2.5x2.5mm blue number 6 slide-in pack of 600	PAK	$67.83	$6.78	-	30000
37809	2.5x2.5mm black number 0 slide-in pack of 600	PAK	$67.83	$6.78	-	30000
37810	2.5x2.5mm red number 2 slide-in pack of 600	PAK	$67.83	$6.78	-	30000
	Black numbers on white background					
37780	2.5x2.5mm number 0 slide-in pack of 600	PAK	$66.22	$6.62	-	30000
37781	2.5x2.5mm number 1 slide-in pack of 600	PAK	$66.22	$6.62	-	30000
37782	2.5x2.5mm number 2 slide-in pack of 600	PAK	$66.22	$6.62	-	30000
37783	2.5x2.5mm number 3 slide-in pack of 600	PAK	$66.22	$6.62	-	30000
37784	2.5x2.5mm number 4 slide-in pack of 600	PAK	$66.22	$6.62	-	30000
37785	2.5x2.5mm number 5 slide-in pack of 600	PAK	$66.22	$6.62	-	30000
37786	2.5x2.5mm number 6 slide-in pack of 600	PAK	$66.22	$6.62	-	30000
37787	2.5x2.5mm number 7 slide-in pack of 600	PAK	$66.22	$6.62	-	30000
37788	2.5x2.5mm number 8 slide-in pack of 600	PAK	$66.22	$6.62	-	30000
37789	2.5x2.5mm number 9 slide-in pack of 600	PAK	$66.22	$6.62	-	30000
	Black capital letters on white background					
37826	2.5x2.5mm letter A slide-in pack of 240	PAK	$27.17	$2.72	-	24000
37827	2.5x2.5mm letter B slide-in pack of 240	PAK	$27.17	$2.72	-	24000
37828	2.5x2.5mm letter C slide-in pack of 240	PAK	$27.17	$2.72	-	24000
37829	2.5x2.5mm letter D slide-in pack of 240	PAK	$27.17	$2.72	-	24000
37830	2.5x2.5mm letter E slide-in pack of 240	PAK	$27.17	$2.72	-	24000
37831	2.5x2.5mm letter F slide-in pack of 240	PAK	$27.17	$2.72	-	24000
37832	2.5x2.5mm letter G slide-in pack of 240	PAK	$27.17	$2.72	-	24000
37835	2.5x2.5mm letter J slide-in pack of 240	PAK	$27.17	$2.72	-	24000
37836	2.5x2.5mm letter K slide-in pack of 240	PAK	$27.17	$2.72	-	24000
37837	2.5x2.5mm letter L slide-in pack of 240	PAK	$27.17	$2.72	-	24000
37838	2.5x2.5mm letter M slide-in pack of 240	PAK	$27.17	$2.72	-	24000

N New product | ECO Energy Saving products | More info available. See technical pages | COMING SOON Coming soon | Product to be discontinued

Whilst most items are stock lines some products are made to order. UoM = Unit Of Measure.
Prices are effective 1 June 2017 and are subject to change without notice. Trade prices exclude GST.

Marking system

MEMOCAB Cable marking

37955

37712

37930

Cat.Nos	Markers for wiring	UoM	Trade price $	GST $	Box qty	Carton qty
	Black capital letters on white background					
37839	2.5x2.5mm letter N slide-in pack of 240	PAK	$27.17	$2.72	-	24000
37840	2.5x2.5mm letter O slide-in pack of 240	PAK	$27.17	$2.72	-	24000
37841	2.5x2.5mm letter P slide-in pack of 240	PAK	$27.17	$2.72	-	24000
37842	2.5x2.5mm letter Q slide-in pack of 240	PAK	$27.17	$2.72	-	24000
37843	2.5x2.5mm letter R slide-in pack of 240	PAK	$27.17	$2.72	-	24000
37844	2.5x2.5mm letter S slide-in pack of 240	PAK	$27.17	$2.72	-	24000
37845	2.5x2.5mm letter T slide-in pack of 240	PAK	$27.17	$2.72	-	24000
37846	2.5x2.5mm letter U slide-in pack of 240	PAK	$27.17	$2.72	-	24000
37847	2.5x2.5mm letter V slide-in pack of 240	PAK	$27.17	$2.72	-	24000
37848	2.5x2.5mm letter W slide-in pack of 240	PAK	$27.17	$2.72	-	24000
37849	2.5x2.5mm letter Y slide-in pack of 240	PAK	$27.17	$2.72	-	24000
37850	2.5x2.5mm letter X slide-in pack of 240	PAK	$27.17	$2.72	-	24000
37851	2.5x2.5mm letter Z slide-in pack of 240	PAK	$27.17	$2.72	-	24000
	Black conventional symbols on white background					
37954	2.5mm symbol / slide-in pack of 240	PAK	$27.17	$2.72	-	24000
37955	2.5mm symbol . slide-in pack of 240	PAK	$27.17	$2.72	-	24000
37956	2.5mm symbol + slide-in pack of 240	PAK	$27.17	$2.72	-	24000
37957	2.5mm symbol - slide-in pack of 240	PAK	$27.17	$2.72	-	24000
37958	2.5mm symbol ~ slide-in pack of 240	PAK	$27.17	$2.72	-	24000
37959	2.5mm symbol DC slide-in pack of 240	PAK	$27.17	$2.72	-	24000
37960	2.5mm symbol earth slide-in pack of 240	PAK	$27.17	$2.72	-	24000
	Marker holders					
37710	7 markers capacity 17.5mm transparent adhesive	PAK	$33.54	$3.35	-	10000
37712	8 markers capacity 20mm transparent fixing with cable tie	PAK	$44.11	$4.41	-	5000
37910	0.25-1.5mm² 7 marker clear Ø1.3-3.5mm dual sleeve pack of 500	PAK	$159.16	$15.92	-	5500
37911	0.75-4mm² 7 marker clear Ø2.3-4.8mm dual sleeve pack of 500	PAK	$159.16	$15.92	-	5500
37920	0.25-1.5mm² 7 marker clear Ø1.3-3.5mm dual sleeve pack of 1000	PAK	$123.04	$12.30	-	11000
37921	0.75-4mm² 7 marker clear Ø2.3-4.8mm dual sleeve pack of 1000	PAK	$133.24	$13.32	-	11000
37922	4-16mm² 7 marker clear Ø4.2-7.6mm sleeve pack of 500	PAK	$133.24	$13.32	-	5500
37930	0.25-1.5mm² 6 marker clear Ø1.3-3.5mm sleeve pack of 1000	PAK	$84.60	$8.46	-	10000
37931	0.75-4mm² 6 marker clear Ø2.3-4.8mm sleeve pack of 1000	PAK	$91.35	$9.14	-	10000
37932	4-16mm² 6 marker clear Ø4.2-7.6mm sleeve pack of 500	PAK	$66.98	$6.70	-	-

N New product | ECO Energy Saving products | More info available. See technical pages | COMING SOON Coming soon | Product to be discontinued

Whilst most items are stock lines some products are made to order. UoM = Unit Of Measure.
Prices are effective 1 June 2017 and are subject to change without notice. Trade prices exclude GST.

Marking system

MEMOCAB Cable marking

37933

37940

37991

37993

Cat.Nos	Marker holders	UoM	Trade price $	GST $	Box qty	Carton qty
37933	16-50mm² 7 marker clear Ø7.6-12.5mm sleeve pk of 500	PAK	$116.10	$11.61	-	5000
37934	50-95mm² 7 marker clear Ø12.5-19mm sleeve pk of 2000	PAK	$143.28	$14.33	-	2000
37935	95-300mm² marker clear Ø19-29.5 7 sleeve pack of 100	PAK	$107.18	$10.72	-	1000
37936	0.25-1.5mm² 7 marker clear Ø1.3-3.5mm sleeve pack of 1000	PAK	$106.32	$10.63	-	10000
37937	0.75-4mm² 7 marker clear Ø2.3-4.8mm sleeve pack of 1000	PAK	$117.87	$11.79	-	10000
37938	4-16mm² 7 marker clear Ø4.2-7.6mm sleeve pack of 500	PAK	$77.65	$7.76	-	5000
37940	0.25-1.5mm² 12 marker clear Ø1.3-3.5mm sleeve pack of 500	PAK	$107.75	$10.78	-	5000
37941	0.75-4mm² 12 marker clear Ø2.3-4.8mm sleeve pack of 500	PAK	$116.63	$11.66	-	5000
37942	4-16mm² 12 marker clear Ø4.2-7.6mm sleeve pack of 200	PAK	$62.17	$6.22	-	2000
37943	16-50mm² 12 marker clear Ø7.6-12.5mm sleeve pack of 200	PAK	$88.97	$8.90	-	2000
37944	0.75-4mm² 500mm length Ø2.3-4.8mm clear sleeve pack of 10	PAK	$38.66	$3.87	-	200
	Accessories					
	Double dispenser board					
37991	Double dispenser board plastic for 48 strips of markers black	EA	$96.26	$9.63	-	10
	Extractor					
37993	Extractor metal for 15mm cable holders black	EA	$13.50	$1.35	10	500
37994	Starter kit - complete with markers 0-9 to A-Z	EA	$379.84	$37.98	-	-
	Selecting prong					
37989	Double prong metal for 18 or 30mm marker holders black	EA	$19.69	$1.97	10	500
37990	Prong metal for 30mm marker holders black	EA	$13.50	$1.35	10	500
37992	Prong metal for 15mm marker holders black	EA	$13.50	$1.35	10	500

Terminal blocks

Viking™3 screw connection

37161

37165

37108

37170

Cat.Nos	Connecting	UoM	Trade price $	GST $	Box qty	Carton qty
	1 connection - 1 entry/1 outlet					
37160	Grey 0.25 to 4mm² rig. - 0.25 to 2.5mm² flex. - 5mm pitch	EA	$2.84	$0.28	60	1200
37100	Blue 0.25 to 4mm² rig. - 0.25 to 2.5mm² flex. - 5mm pitch	EA	$2.84	$0.28	60	1200
37161	Grey 0.25 to 6mm² rig. - 0.25 to 4mm² flex. - 6mm pitch	EA	$3.05	$0.30	50	1000
37101	Blue 0.25 to 6mm² rig. - 0.25 to 4mm² flex. - 6mm pitch	EA	$3.05	$0.30	50	1000
37162	Grey 0.5 to 10mm² rig. - 0.25 to 6mm² flex. - 8mm pitch	EA	$4.89	$0.49	40	800
37102	Blue 0.5 to 10mm² rig. - 0.25 to 6mm² flex. - 8mm pitch	EA	$4.89	$0.49	40	800
37163	Grey 1.5 to 16mm² rig. - 2.5 to 10mm² flex. - 10mm pitch	EA	$6.68	$0.67	30	600
37103	Blue 1.5 to 16mm² rig. - 2.5 to 10mm² flex. - 10mm pitch	EA	$6.68	$0.67	30	600
37164	Grey 1.5 to 25mm² rig. - 4 to 16mm² flex. - 12mm pitch	EA	$9.20	$0.92	20	180
37104	Blue 1.5 to 25mm² rig. - 4 to 16mm² flex. - 12mm pitch	EA	$9.20	$0.92	20	180
37165	Grey 2.5 to 50mm² rig. - 4 to 35mm² flex. - 15mm pitch	EA	$17.09	$1.71	20	180
37105	Blue 2.5 to 50mm² rig. - 4 to 35mm² flex. - 15mm pitch	EA	$17.09	$1.71	20	180
37166	Grey 25 to 95mm² rig. - 16 to 70mm² flex. - 22mm pitch	EA	$53.32	$5.33	10	60
	2 connections on 2 levels					
37167	Grey 0.25 to 4mm² rig. - 0.25 to 2.5mm² flex. - 5mm pitch	EA	$11.74	$1.17	60	660
37107	Blue 0.25 to 4mm² rig. - 0.25 to 2.5mm² flex. - 5mm pitch	EA	$11.74	$1.17	60	660
37168	Grey 0.25 to 6mm² rig. - 0.25 to 4mm² flex. - 6mm pitch	EA	$11.44	$1.14	60	660
37108	Blue 0.25 to 6mm² rig. - 0.25 to 4mm² flex. - 6mm pitch	EA	$11.44	$1.14	60	600
	For protection conductor					
	1 connection - 1 entry/1 outlet - metal base					
37170	Green/yellow 0.25 to 4mm² rig. - 0.25 to 2.5mm² flex. - 5mm pitch	EA	$13.26	$1.33	60	1200
37171	Green/yellow 0.25 to 6mm² rig. - 0.25 to 4mm² flex. - 6mm pitch	EA	$14.20	$1.42	50	1000
37172	Green/yellow 0.5 to 10mm² rig. - 0.25 to 6mm² flex. - 8mm pitch	EA	$16.94	$1.69	40	400
37173	Green/yellow 1.5 to 16mm² rig. - 2.5 to 10mm² flex. - 10mm pitch	EA	$19.73	$1.97	30	300
37174	Green/yellow 1.5 to 25mm² rig. - 4 to 16mm² flex. - 12mm pitch	EA	$27.62	$2.76	10	100
37175	Green/yellow 2.5 to 50mm² rig. - 4 to 35mm² flex. - 15mm pitch	EA	$34.44	$3.44	10	100

N New product | ECO Energy Saving products | More info available. See technical pages | COMING SOON Coming soon | Product to be discontinued

Whilst most items are stock lines some products are made to order. UoM = Unit Of Measure.
Prices are effective 1 June 2017 and are subject to change without notice. Trade prices exclude GST.

Terminal blocks

Viking™3 screw connection

37180

37187

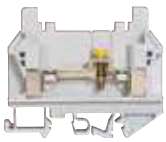

37192

Cat.Nos	Disconnect terminal blocks 1 connection	UoM	Trade price $	GST $	Box qty	Carton qty
	Open (to be equipped)					
37180	Grey 0.25 to 2.5mm² rig. - 0.25 to 2.5mm² flex. - 6mm pitch	EA	$7.71	$0.77	20	640
	For fuse cartridge 5x20 with handle lever					
37181	Grey 0.25 to 2.5mm² rig. - 0.25 to 2.5mm² flex. - 6mm pitch	EA	$11.74	$1.17	20	640
	For fuse cartridge 5x20 with screwed plug					
37187	Grey 0.25 to 16mm² rig. - 0.25 to 10mm² flex. - 12mm pitch	EA	$34.59	$3.46	20	200
	For fuse cartridge 6.3x32 with screwed plug					
37188	Grey 0.25 to 16mm² rig. - 0.25 to 10mm² flex. - 12mm pitch	EA	$54.79	$5.48	20	200
	Disconnect for measurement					
	1 connection					
37192	Grey 0.25 to 4mm² rig. - 0.25 to 4mm² flex. - 8mm pitch	EA	$49.54	$4.95	25	250

N New product | ECO Energy Saving products | More info available. See technical pages | COMING SOON Coming soon | Product to be discontinued

Whilst most items are stock lines some products are made to order. UoM = Unit Of Measure.
Prices are effective 1 June 2017 and are subject to change without notice. Trade prices exclude GST.

Terminal blocks

Viking™3 accessories

37510

37540

37546

Cat.Nos	End stops	UoM	Trade price $	GST $	Box qty	Carton qty
37510	6mm pitch screwless mounting for 1 entry/1 outlet 5, 6, 8 and 10mm pitch	EA	$7.28	$0.73	50	1000
37511	8mm pitch	EA	$2.38	$0.24	20	500
37512	10mm pitch	EA	$7.28	$0.73	10	250
37513	12mm pitch	EA	$6.99	$0.70	20	500
	End caps					
	For screw terminal blocks					
37550	1 entry/1 outlet 5, 6, 8 and 10mm pitch	EA	$1.18	$0.12	100	2000
37551	1 entry/1 outlet 12 and 15mm pitch	EA	$2.38	$0.24	20	800
37552	2 entries/2 outlets	EA	$2.51	$0.25	20	800
37556	Disconnect type fuse cartridge 5x20 and 6.3x32 with screwed plug	EA	$5.80	$0.58	20	600
	Separation and insulation dividers					
37560	1 entry/1 outlet 5, 6, 8 and 10mm pitch	EA	$1.63	$0.16	20	800
37562	2 entries/2 outlets and disconnect type 6mm pitch	EA	$4.59	$0.46	10	400
	Equipotential bridging accessories					
	Bridging combs					
37501	For 10 blocks with 5mm pitch	EA	$9.34	$0.93	20	880
37502	For 2 blocks with 5mm pitch	EA	$5.80	$0.58	50	2200
	Bars for screw terminal blocks					
37540	For 12 blocks with 10mm pitch	EA	$34.75	$3.48	10	100
37542	For 12 blocks with 12mm pitch	EA	$47.81	$4.78	10	100
	Bridging combs for 3 level screw terminal blocks					
37546	Brown for 12 blocks with 5mm pitch	EA	$15.13	$1.51	10	1000
37547	Blue for 12 blocks with 5mm pitch	EA	$15.13	$1.51	10	1000
	Protective screens					
	Cut to length					
37568	5, 6, 8 and 10mm pitch	EA	$52.26	$5.23	-	10
37569	12 and 15mm pitch	EA	$77.05	$7.70	-	10

N New product | ECO Energy Saving products | More info available. See technical pages | COMING SOON Coming soon | Product to be discontinued

Whilst most items are stock lines some products are made to order. UoM = Unit Of Measure.
Prices are effective 1 June 2017 and are subject to change without notice. Trade prices exclude GST.

Ferrules

Starfix™ ferrules with insulation flange

37650

37764

37666

37677

37678

Cat.Nos	Ferrules with insulating flange	UoM	Trade price $	GST $	Box qty	Carton qty
	Singles - supplied in strips					
37650	0.25mm² 15mm long turquoise pack of 500	PAK	$148.46	$14.85	-	20000
37660	0.34mm² 15mm long green pack of 500	PAK	$148.46	$14.85	-	20000
37661	0.5mm² 15mm long white pack of 480	PAK	$142.55	$14.26	-	19200
37662	0.75mm² 15mm long blue pack of 480	PAK	$142.55	$14.26	-	19200
37663	1mm² 15mm long red pack of 1000	PAK	$291.11	$29.11	-	40000
37664	1.5mm² 15mm long black pack of 1000	PAK	$291.11	$29.11	-	40000
37666	2.5mm² 15mm long grey pack of 1000	PAK	$346.56	$34.66	-	40000
37667	4mm² 21mm long orange pack of 250	PAK	$169.68	$16.97	-	10000
37668	6mm² 23mm long green pack of 250	PAK	$214.20	$21.42	-	10000
	Single - individual (box packing)					
37669	10mm² 21mm long brown pack of 100	PAK	$102.68	$10.27	-	4000
37670	16mm² 29mm long white pack of 100	PAK	$151.62	$15.16	-	4000
37671	25mm² 31mm long black pack of 50	PAK	$103.78	$10.38	-	2000
37677	35mm² 32mm long red pack of 50	PAK	$132.69	$13.27	-	2000
37678	50mm² 36mm long blue pack of 30	PAK	$208.51	$20.85	-	1200
	Double - individual					
37687	2 x 0.75mm² 15mm long blue pack of 500	PAK	$211.05	$21.10	-	12500
37688	2 x 1mm² 15mm long red pack of 500	PAK	$211.05	$21.10	-	12500
37689	2 x 1.5mm² 16mm long black pack of 500	PAK	$213.90	$21.39	-	12500
37690	2 x 2.5mm² 18.5mm long grey pack of 500	PAK	$211.05	$21.10	-	10000

N New product | ECO Energy Saving products | More info available. See technical pages | COMING SOON Coming soon | Product to be discontinued

Whilst most items are stock lines some products are made to order. UoM = Unit Of Measure.
Prices are effective 1 June 2017 and are subject to change without notice. Trade prices exclude GST.

Ferrules

Starfix™ refills and accessories

37641

37643

37606

37692

37647

Cat.Nos	Single - supplied as refills	UoM	Trade price $	GST $	Box qty	Carton qty
37641	0.5mm² 15mm long ferrules/strip white pack of 300	RL	$88.70	$8.87	-	3000
37642	0.75mm² 15mm long ferrules/strip blue pack of 300	RL	$88.70	$8.87	-	3000
37643	1mm² 15mm long ferrules/strip red pack of 300	RL	$88.70	$8.87	-	3000
37644	1.5mm² 15mm long ferrules/strip black pack of 300	RL	$88.70	$8.87	-	3000
37645	2.5mm² 15mm long ferrules/strip grey pack of 250	RL	$88.70	$8.87	-	2500
	Crimping tools for ferrules in strips					
37608	0.25-0.34mm² supplied with empty applicator	EA	$172.52	$17.25	-	15
37609	0.5-2.5mm² supplied with adjustment wheel and empty applicator	EA	$172.52	$17.25	-	15
37610	4-6mm² supplied with adjustment wheel and empty applicator	EA	$201.52	$20.15	-	15
37697	Multi-purpose crimping tool 0.5-2.5mm² with 5 empty applicators	EA	$1,015.15	$101.52	-	4
37639	Assorted kit	EA	$462.49	$46.25	-	-
	Crimping tools for individual single and double ferrules					
37606	Crimping tool 0.5-2.5mm² adjustment wheel with empty applicator	EA	$723.46	$72.35	-	20
	Starfix™ crimping tool for 10 to 50mm²					
37692	Crimping tool 0.5-2.5mm² adjustment wheel with empty applicator	EA	$974.82	$97.48	-	-
	Starfix™ applicator for crimping tool					
37646	0.25mm² and 0.34mm² 15mm long yellow pack of 10	EA	$13.05	$1.30	10	200
37647	0.5mm² and 2.5mm² 15mm long red pack of 10	EA	$17.09	$1.71	10	200
37648	4mm² and 6mm² 15mm long orange pack of 10	EA	$17.09	$1.71	10	200

N New product | ECO Energy Saving products | More info available. See technical pages | COMING SOON Coming soon | Product to be discontinued

Whilst most items are stock lines some products are made to order. UoM = Unit Of Measure.
Prices are effective 1 June 2017 and are subject to change without notice. Trade prices exclude GST.

Hypra® IP66/67-55 appliance inlets and sockets with isolator and straight and angled plugs

Cat no. 51106, 51110, 51111, 51161, 52042, 52243, 52244, 52742, 52762, 52936, 52943, 52944, 52946, 53006, 53010, 53011, 53056, 53060, 53061, 53086, 53090, 53091, 59346, 59347, 59376, 59447, 59448, 59477, 59478

Panel mounting appliance inlets

External screws in stainless steel - Nickel plated contacts
IP66/67-55 - 63A
Can be fixed on box Cat no. 53889
Terminal connection: 1 x 16mm² max. rigid

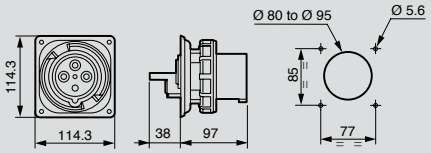

	Weight (kg)
2P+E	0.490
3P+E	0.548
3P+N+E	0.610

IP66/67-55 - 125A
Terminal connection: 1 x 50mm² max. rigid

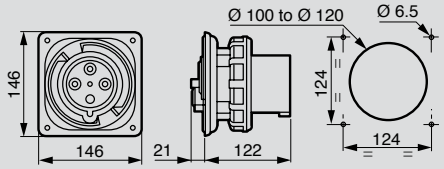

	Weight (kg)
3P+E	1.00
3P+N+E	1.15

Socket with break isolating switch

IP66/67-55 - LV 125A
IP67 according to IEC and EN 60529
Icc 10kA according to IEC and EN 60309-1
Panel mounting sockets: IK 09 according to IEC and EN 62262
External screws in stainless steel

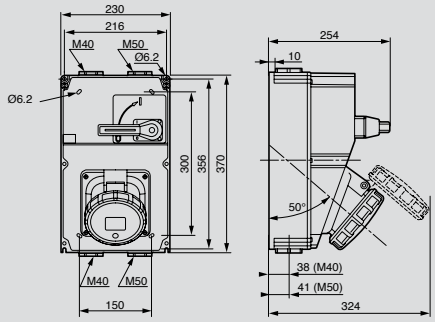

(1) Metal on request

Characteristics

External screws in stainless steel - Nickel plated contacts
Terminal connection:
LV 16A: 1 x 2.5mm² max. flexible
LV 32A: 1 x 6mm² max. flexible
LV 63A: 1 x 16mm² max. flexible
LV 125A: 1 x 50mm² max. flexible

Dimensions

Straight plugs IP66/67-55 LV 16/32A

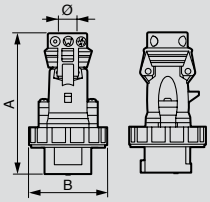

	Weight (kg)	Dimensions (mm)		Ø Clamping and grip
		A	B	
16A				
2P+E	0.165	135	72.5	8 to 15
3P+E	0.195	139	81	8 to 15
3P+N+E	0.220	154	86.5	10 to 18
32A				
2P+E	0.280	164	94.5	10 to 18
3P+E	0.280	164	94.5	12 to 22
3P+N+E	0.325	170	101	12 to 22

Straight plugs IP66/67-55 LV 63A

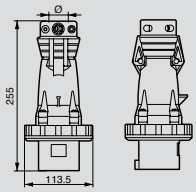

	Weight (kg)	Ø Clamping and grip
2P+E	0.620	16 to 26
3P+E	0.680	18.5 to 29
3P+N+E	0.750	20.5 to 32

LV 125A

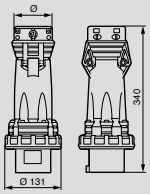

	Weight (kg)	Ø Clamping and grip
3P+E	1.5	24 to 48
3P+N+E	1.7	28 to 48

Straight plugs IP66/67-55 LV 16-32A - plastic

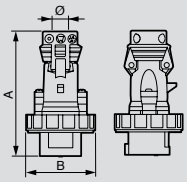

	Weight (kg)	Dimensions (mm)		Ø Clamping and grip
		A	B	
16A				
2P+E	0.165	136	72.5	8 to 15
3P+E	0.195	141	81	8 to 15
3P+N+E	0.220	150	86.5	10 to 18
32A				
2P+E	0.280	161	94.5	10 to 18
3P+E	0.280	161	94.5	12 to 22
3P+N+E	0.325	167	101	12 to 22

Hypra® IP66/67-55 panel mounting and surface mounting boxes

Cat no. 51126, 51130, 51131, 51146, 51150, 51151, 52203, 52919, 52920, 53046, 53050, 59327, 59427, 59428

Dimensions

IP66/67-55 - LV 16A

External screws in stainless steel - Nickel plated contacts
Terminal connection (max.): 1 x 4mm² rigid or flexible

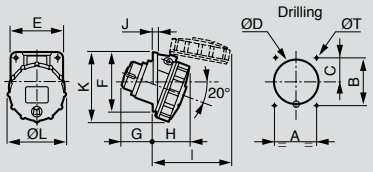

	Weight (kg)	Drilling					Dimensions (mm)							
		A	B	C	ØD	ØT	E	F	G	H	I	J	K	L
LV - 16A														
2P+E	0.140	52	60	33	55	4.2	64	72	40	45	91	5.5	87	72.5
3P+E	0.165	60	70	39	63.5	5.2	74	84	41	48	102	5.5	96	81
3P+N+E	0.195	60	70	37	70.6	5.2	80	84	42	50	106	5.5	96	86.5

IP66/67-55 - LV 16 and 32A with single fixing centres

Terminal connection (max.):
16A: 1 x 4mm² rigid
32A: 1 x 10mm² rigid

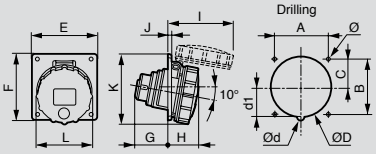

	Weight (kg)	Drilling							Dimensions (mm)							
		A	B	C	ØD	Ød	d1	Ø	E	F	G	H	I	J	K	ØL
LV - 16A																
2P+E	0.140	70	70	35	76.2	-	-	4.2	84	84	42	39	83	4.5	90	72.5
3P+E	0.165	70	70	35	76.2	-	-	4.2	84	84	43	41	98	4.5	93	81
3P+N+E	0.195	70	70	35	76.2	-	-	4.2	84	84	43	41	99	4.5	91	86.5
LV - 32A																
2P+E	0.165	70	70	35	76.2	-	-	4.2	84	94	54	50	113	4.5	101	94.5
3P+E	0.165	70	70	35	76.2	-	-	4.2	84	94	54	50	113	4.5	101	94.5
3P+N+E	0.195	70	70	35	76.2	8	36	4.2	84	94	54	51	120	4.5	103	101

IP66/67-55 - LV 63 and 125A

Terminal connection (max.):
63A: 1 x 25mm² rigid
125A: 1 x 70mm² rigid

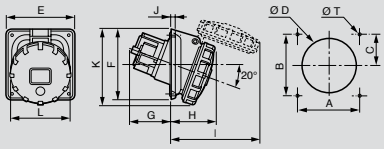

	Weight (kg)	Drilling					Dimensions (mm)							
		A	B	C	ØD	ØT	E	F	G	H	I	J	K	ØL
LV - 63A														
2P+E	0.680													
3P+E	0.710	77	85	42.5	92	6.5	106	106	85	79	158	6	127	113.5
3P+N+E	0.770													
LV - 125A														
3P+E	1.400	124	124	62	120	6.5	146	146	84	96	190	8	165	146
3P+N+E	1.550													

Dimensions

IP44, IP66/67-55 - LV 16A

Fix A1 and A2:
Blind optional fixing points
Metal boxes fitted with
- 2 connected earth terminals and 1 outside terminal
- 1 sleeve for metal socket's ground pin

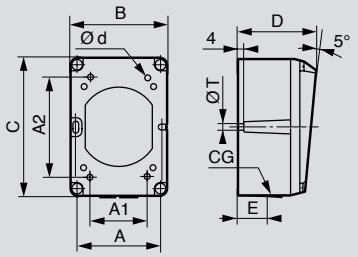

Surface mounting sockets / Panel mounting sockets	Material	Weight (kg)	Drilling					Dimensions (mm)				CG cable gland
			A1	A2	Ød	A	ØT	B	C	D	E	
IP44 and IP66/67-55 - LV 16A												
2P+E	Plastic	0.115	51	68	4.2	64	5.3	74	106	58	20	M 20
	Metal	0.400										
3P+E / 3P+N+E	Plastic	0.160	68	68	4.2	85	5.3	96	122	60	22	M 20
	Metal	0.520										

IP44, IP66/67-55 - LV 32A

Blind optional fixing points
Metal boxes fitted with
- 2 connected earth terminals and 1 outside terminal
- 1 sleeve for metal socket's ground pin

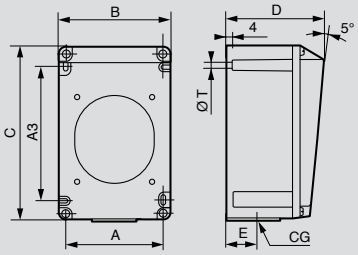

Surface mounting sockets / Panel mounting sockets	Material	Weight (kg)	Drilling			Dimensions (mm)				CG cable gland
			A	A3	ØT	B	C	D	E	
IP44 and IP66/67-55 - LV 32A										
2P+E / 3P+E / 3P+N+E	Plastic	0.340	90	125	5.3	102	162	90	26	M 25
	Metal	0.910								

Hypra® IP66/67-55 mobile sockets

Cat no. 51176, 51180, 51181, 52082, 52283, 52284, 52782, 52983, 52984, 52986, 53076, 53080, 53081, 59386, 59387, 59487, 59488

Characteristics

External screws in stainless steel - Nickel plated contacts
Icc 10kA according to IEC 60309-1

Dimensions

Mobile sockets IP66/67-55

LV 16 - 32A

Terminal connections:
LV 16A: 1 x 2.5mm² max. flexible
LV 32A: 1 x 6mm² max. flexible

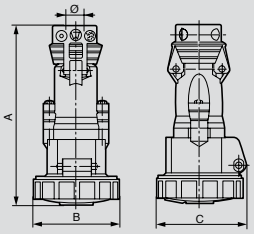

LV 63A

Terminal connection:
1 x 16mm² max. flexible

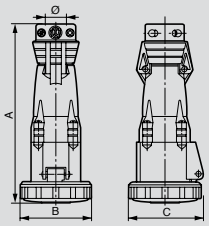

	Material	Weight (kg)	Dimensions (mm)			Ø Clamping and grip
			A	B	C	
LV 16A						
2P+E	Plastic	0.180	150	72.5	75.5	8 to 15
3P+E	Plastic	0.215	154	81	86	8 to 15
3P+N+E	Plastic	0.275	169	86.5	89	10 to 18
LV 32A						
2P+E	Plastic	0.320	179	94.5	99	10 to 18
3P+E	Plastic	0.320	179	94.5	99	12 to 22
3P+N+E	Plastic	0.375	185	101	105	12 to 22
LV 63A						
2P+E	Plastic	0.780	278	113.5	119	16 to 26
3P+E	Plastic	0.850	278	113.5	119	18.5 to 29
3P+N+E	Plastic	0.910	278	113.5	119	20.5 to 32

LV 125A

Terminal connection:
1 x 50mm² max. flexible

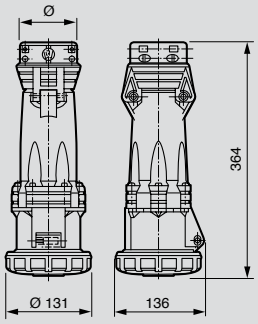

	Weight (kg)	Ø Clamping and grip
125A		
3P+E	1.8	24 to 48
3P+N+E	2.0	28 to 48

Plexo³ enclosures

Cat no. 601974, 601976, 601978, 601981, 601982, 601983, 01955

Distribution boards

Cat no. 01301, 01302, 01304, 01306, 01308, HL12F, HL12S, HEE18F, HEE18S, HL24F, HL24S, HL36F, HL36S

Dimensions

Cabinets 4, 6 and 8 modules

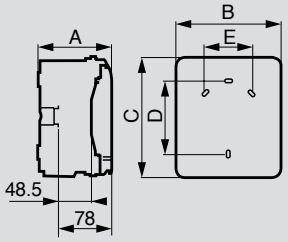

Cat no.	Dimensions (mm)				
	A	B	C	D	E
601974	115.6	128	200	120	-
601976	115.6	164	200	120	70
601978	115.6	200	200	120	106

Cabinets 12, 24 and 36 modules

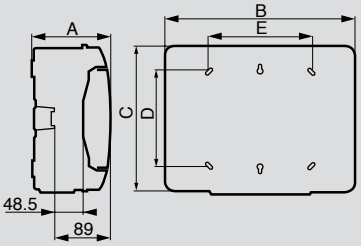

Cat no.	Dimensions (mm)				
	A	B	C	D	E
601981	141	340	282	180	180
601982	161	340	432	330	180
601983	161	340	622	480	180

Number of knockouts on each side

Cat no.	Top/bottom			Left/right		
	Ø20mm	Ø25mm	Ø32mm	Ø20mm	Ø25mm	Ø32mm
601974	2	1	-	2	-	-
601976	4	1	-	2	-	-
601978	6	1	-	2	-	-
601981	7	2	2	-	-	2
601982	13	2	2	-	-	3
601983	13	2	2	-	-	4

Direct piercing end caps

Cat no.	Type	Number of end caps per pack	Ø	
			Min. (mm)	Max. (mm)
01955	ISO 20	10	4	13
	ISO 25	5	9	18
	ISO 32	2	12	25

Dimensions

Consumer unit with 1 to 9 modules per row

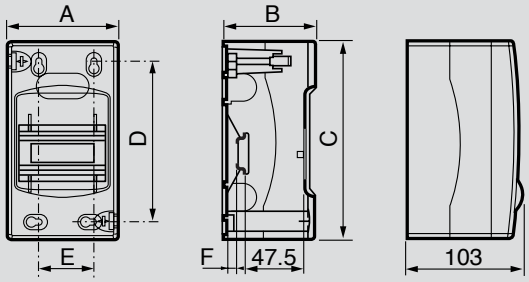

Cat No. 01301/02/04/06/08

Cat No. 01308 with cover

Cat no.	A	B	C	D	E	F
01301	30	72	140	120	10	7
01302	50	72	140	115	25	7
01304	90	74	160	130	45	7
01306	128	74	160	125	80	7
01308	190	83	180	130	120	14.5

Technical characteristics - DBX³

Protection rating	IP42
Chassis	DIN chassis 250A, 25kA/0.1s
Dimensions	590mm W x 225mm D x H
Construction	1.5mm cold rolled steel
Colour	N12 Pastel Grey or X15 Electric Orange
Compliance	AS/NZ 3439.3

Earth and neutral bar - load centre

HL12F - HL12S
- Neutral bar: 1 x (1 x 35mm² + 12 x 25mm²)
- RCD bar: 2 x (4 x 25mm²)
- Earth bar: 1 x (8 x 25mm²)

HEE18F - HEE18S
- Neutral bar: 1 x (2 x 35mm² + 12 x 16mm²)
- RCD bar: 3 x (1 x 25mm² + 4 x 16mm²)
- Earth bar: 1 x (2 x 35mm² + 12 x 16mm²)

HL24F - HL24S
- Neutral bar: 1 x (1 x 35mm² + 12 x 25mm²)
- RCD bar: 2 x (8 x 25mm²)
- Earth bar: 1 x (1 x 35mm² + 16 x 25mm²)

HL36F - HL36S
- Neutral bar: 1 x (1 x 35mm² + 12 x 25mm²)
- RCD bar: 2 x (8 x 25mm²)
- Earth bar: 1 x (1 x 35mm² + 21 x 25mm²)

Hypra® IP66/67-55 surface mounting sockets

Cat no. 52702, 52940, 52949, 53051, 59336, 59337, 59437, 59438

Dimensions

IP44 - LV 16 to 32A, IP66/67-55 - LV 16 and 32A, IP66/67 - LV 63A

Plastic boxes fitted with 2 connected earth terminals
Metal boxes fitted with
- 2 connected earth (16/32A) terminals and 1 outside terminal
- 1 sleeve for metal socket's ground pin
- 3 connected earth (63A) terminals

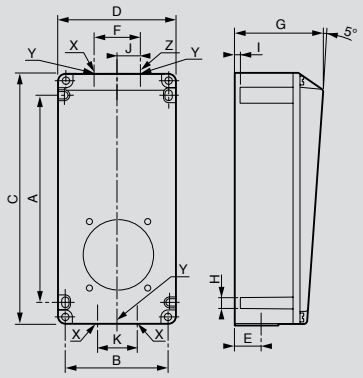

Surface mounting sockets / Panel mounting sockets	Material	Weight (kg)	Drilling A	Drilling B	Drilling H	Dimensions (mm) C	D	E	F	G	I	J	K	X	Y	Z
16A																
2P+E	Plastic	0.330	145	74	5.3	182	86	22	34	75	4	-	-	-	M20	-
	Metal	0.830														
3P+E / 3P+N+E	Plastic	0.440	175	88	5.3	212	100	22	40	77	4	-	-	-	M20	-
	Metal	0.980														
32A																
2P+E	Plastic	0.670	234	117	5.3	270	130	30	50	120	4	-	-	-	M25	-
2P+E / 3P+E / 3P+N+E	Metal	1.730														

Dimensions

IP66/67-55 - LV 63A

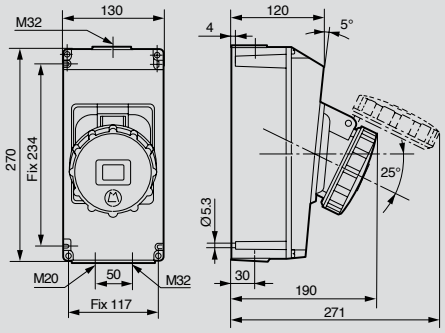

	Weight (kg)
2P+E	1.500
3P+E	1.550
3P+N+E	1.600

IP66/67-55 - LV 125A

Terminal connection: 1 x 70mm² rigid max.

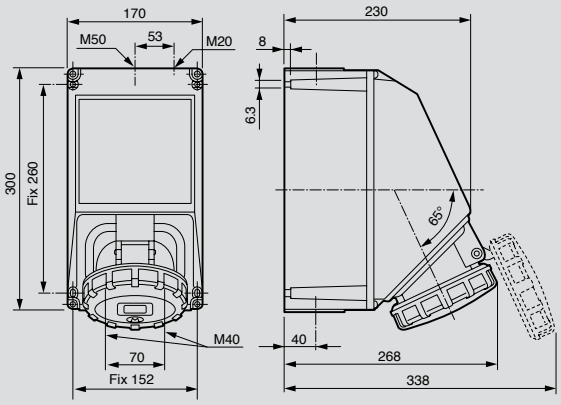

	Weight (kg)
3P+E	3.5
3P+N+E	3.7

Transcab and Lina 25™ cable ducting

Cat no. 636095, 636096, 636101, 636102, 636103, 636105, 636106, 636107, 636108, 636109, 636111, 636112, 636113, 636114, 636115, 636116, 636117, 636118, 636119, 636120, 636121, 636122, 636123, 636206, 636207, 636212, 036201, 036213

Lina 25 accessories installation

Fixing on rail

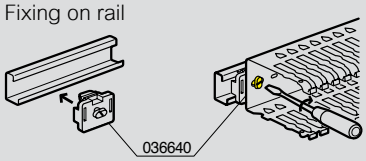

Fixing on perforated plate

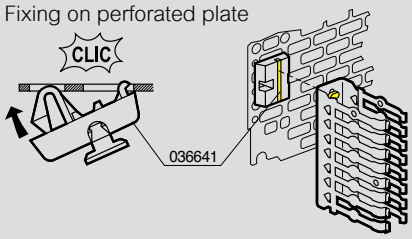

Fixing on door

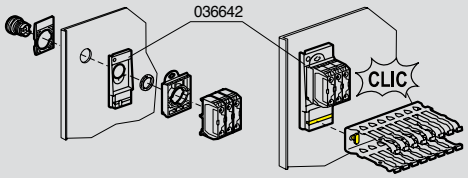

Cable retainer

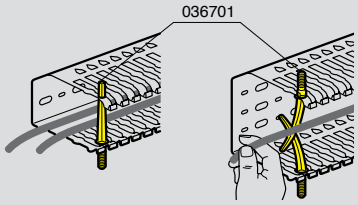

Dimensions

Width 15mm (Transcab)

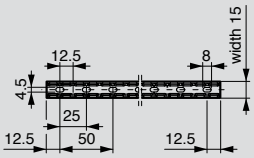

Width 25 to 60mm
(Transcab and Lina 25)

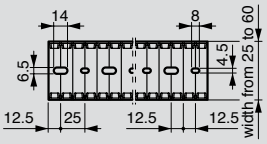

Width 80 to 120mm
(Transcab and Lina 25)

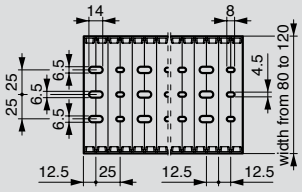

Width 150mm (Transcab)

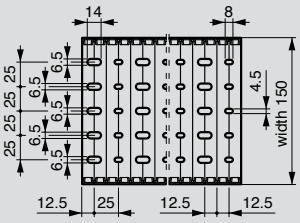

Dimensions (continued)

Transcab cable ducting

Cat no.	A (mm)	B (mm)
636095	15	25
636096	15	40
636100	25	25
636101	25	40
636102	25	60
636103	25	80
636105	40	25
636106/636206	40	40
636107/636207	40	60
636108	40	80
636109	40	100
636111	60	40
636112/636212	60	60
636113	60	80
636114	60	100
636115	80	40
636116	80	60
636117	80	80
636118	80	100
636119	100	40
636120	100	60
636121	100	80
636122	100	100
636124	120	60
636125	120	80
636123	150	100

Lina 25 cable ducting

Cat no.	A (mm)	B (mm)	C (mm)
036201	25	40	5
036213	60	80	10

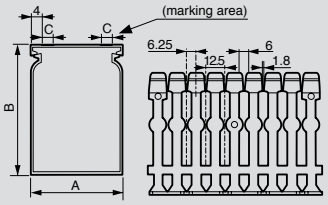

Calculating the ducting usable cross section

Graph for H 05 V-K and H 07 V-K cables with 0.75 packing coefficient

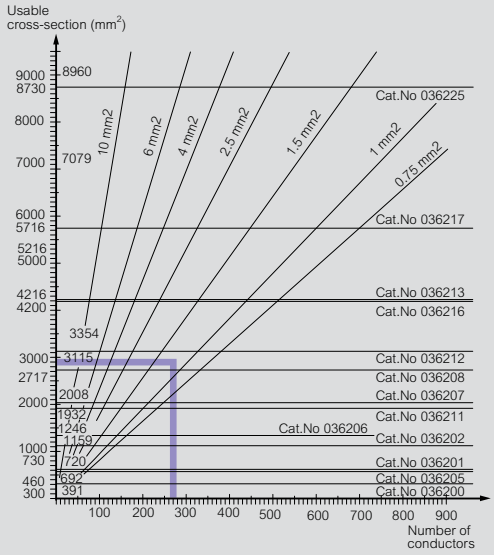

Example: 150 conductors 0.75mm² -> 1230mm² cross section and
120 conductors 1.5mm² -> 1700mm² cross section
Makes a total of 2930mm²

EN 50085-2-3 Classification of Transcab and Lina 25 cable ducting

6.3 Minimum storage & transport temperature	- 25°C
6.3 Maximum operating temperature	+ 60°C
6.101 Mounting position	Vertical or horizontal

Viking™ 3 terminal blocks with screw connection

Cat no. 37100, 37101, 37102, 37103, 37104, 37105, 37107, 37108, 37160, 37161, 37162, 37163, 37164, 37165, 37166, 37167, 37168, 37170, 37171, 37172, 37173, 37174, 37175, 37180, 37181, 37187, 37188, 37192

Characteristics and dimensions (mm)

V2 polyamide according to UL 94, 960°C according to IEC EN 60695-2-11

Connecting blocks

Cat no.	Voltage (V)			Current (A)				Nominal cross-section		
	IEC	CSA	UL	Ie	IEC	CSA	UL	IEC (mm²)	CSA (AWG)	UL (AWG)
37100/60	800	600	600	27	24	20	20	2.5	12	12
37101/61				36	32	30	30	4	10	10
37102/62				48	41	50	50	6	8	8
37103/63				63	57	60	60	10	6	6
37104/64				85	76	85	85	16	4	4
37105/65				138	125	115	115	35	2	2
37107/67	500	300	300	27	24	20	20	2.5	12	12
37108/68				36	32	30	30	4	10	10
37166	1000	600	600	213	192	200	200	70	000	000

Cat No. 37100/01/02/60/61/62/63

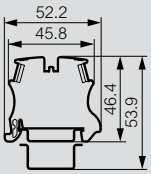

Cat No. 37104/05/64/65

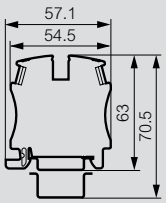

Cat No. 37166

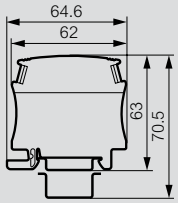

Cat No. 37107/08/67/68

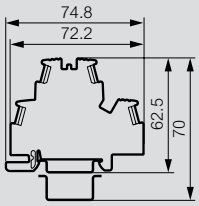

Blocks for protection conductor

V2 polyamide according to UL 94, 960°C according to IEC EN 60695-2-11

Blocks for protection conductor

Cat no.	Voltage (V)			Current (A)		Nominal cross-section		
	IEC	CSA	UL	Ie	IEC	IEC (mm²)	CSA (AWG)	UL (AWG)
37170	800	600	600	-	-	2.5	12	12
37171				-	-	4	10	10
37172				-	-	6	8	8
37173 [1]				63	57	10	6	6
37174 [1]				85	76	16	4	4
37175 [1]				138	125	35	2	2

IEC 60947-7-1/7-2, CSA no. 22-2 no. 158, UL 1059
Ie: Rated current NF C 15100 table 52H, column 4
[1] PEN terminal blocks

Cat No. 37170/71/72/73

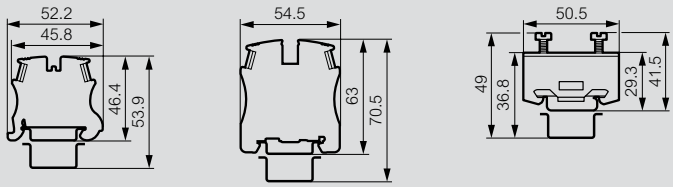

Disconnect terminal blocks

Cat no.	Voltage (V)			Current (A)			Nominal cross-section		
	IEC	CSA	UL	IEC	CSA	UL	IEC (mm²)	CSA (AWG)	UL (AWG)
37180	500	300	300	15	15	15	2.5	12	12
37181	250	250	250	6.3	6.3	6.3			
37187/88	250	250	250	10	10	10	10		

IEC 60947-7-1/7-3, CSA no. 22-2 no. 158, UL 1059

Power according to EN 60947-7-3

Cat no.	Short-circuit		Short-circuit + overload	
	Separate blocks	Assembled blocks	Separate blocks	Assembled blocks
37181 or 37180 + 375 [1]	4W / 6.3A	1.6W / 6.3A	1.6W / 6.3A	-
	Pvk = 4.75W	Pvk = 2W	Pv = 1.65W	-
37187/88	4W	2.5W	1.6W	-
	Pvk = 5W	Pvk = 2.7W	Pv = 1.8W	-

[1] With or without blown fuse indicator Cat No. 37525

Cat No. 37180

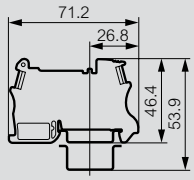

Cat No. 37181

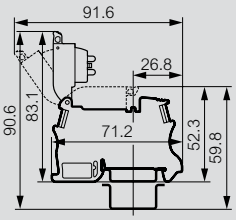

Cat No. 37187/88

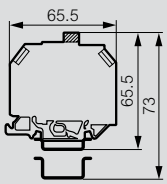

Viking™ 3 terminal blocks with screw connection and accessories

Cat no. 37100, 37101, 37102, 37103, 37104, 37105, 37107, 37108, 37160, 37161, 37162, 37163, 37164, 37165, 37166, 37167, 37168, 37170, 37171, 37172, 37173, 37174, 37175, 37180, 37181, 37187, 37188, 37192, 37501, 37502, 37510, 37510, 37511, 37512, 37513, 37540, 37542, 37546, 37547, 37550, 37551, 37552, 37556, 37560, 37562, 37568, 37569

Disconnect block for measurement

Cat no.	Voltage (V)			Current (A)			Nominal cross-section		
	IEC	CSA	UL	IEC	CSA	UL	IEC (mm²)	CSA (AWG)	UL (AWG)
37192	800	-	-	24	-	-	4	-	-

IEC EN 60947-7-1

Cat No. 37192

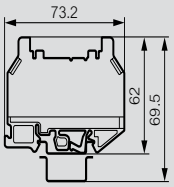

Wiring principle for measurement blocks Cat No. 37192

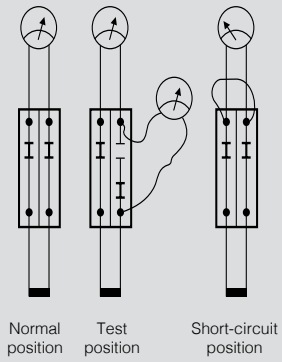

Per circuit:
2 x Disconnect blocks for measurement Cat No. 37192
4 x Measurement sockets for Ø4mm plug Cat No. 37577
1 x End cap Cat No. 37557
1 x Shunt with Ø4mm plugs

Wattmeter circuit

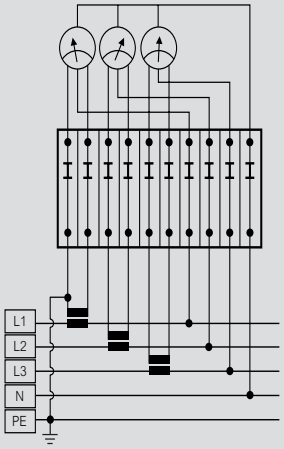

10 x Disconnect blocks for measurement Cat No. 37192
12 x Measurement sockets for Ø4mm plug Cat No. 37577
1 x End cap Cat No. 37557
3 x Shunts with Ø4mm plugs

Stripped lengths (mm)

Screw terminal pitch (mm)	Rigid or flexible wire
5	6 to 8
6	
8	10 to 12
10	
12	13 to 17
15	14 to 18
22	15 to 22

Characteristics and dimensions (mm)

End stops

Cat No. 37510

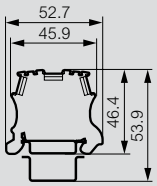

Cat No. 37511

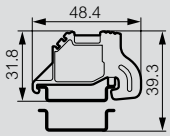

Cat No. 37512

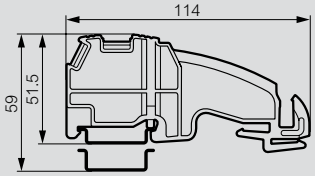

Cat No. 37513

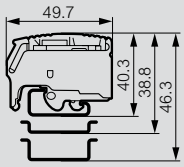

End caps

Cat no.	Thickness (mm)
37550	2
37551	2.5
37552	2
37556	1.4

Separation and insulation dividers

Cat no.	Thickness (mm)
37560	2.5
37562	2.5

Equipotential bridging combs/bars

Cat no.	Cross-section (mm²)
37501	2.5
37502	2.5
37540	10
37542	16
37546	2.5
37547	2.5

Ferrules

Cat no. 37641, 37642, 37643, 37644, 37645, 37646, 37647, 37648, 37650, 37660, 37661, 37662, 37663, 37664, 37666, 37667, 37668, 37669, 37670, 37671, 37677, 37678, 37687, 37688, 37689, 37690

Correspondence table

Ferrule / Cross-section (mm²)	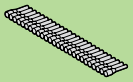 Simple ferrule	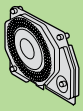 Large capacity ferrule - refills	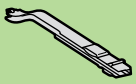 Starfix applicator
0.5	37661	37641	37647
0.75	37662	37642	37647
1	37663	37643	37647
1.5	37664	37644	37647
2.5	37666	37645	37647

Dimensions (mm)

Simple ferrules

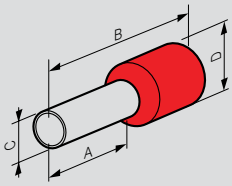

Cat no.		Cross-section (mm²)	A	B	C	D
37650		0.25	8	14.5	1.1	3
37660		0.34	8	14.5	1.1	3
37661	37641	0.5	8	14.5	1.5	3.4
37662	37642	0.75	8	14.5	1.5	3.4
37663	37643	1	8	14.5	1.7	3.6
37664	37644	1.5	8	14.5	2	4.1
37666	37645	2.5	8	14.5	2.6	4.8
37667		4	12	21	3.2	5.7
37668		6	12	23	3.9	7.2
37669		10	12	21	4.9	8.1
37670		16	18	29	6.3	9.8
37671		25	18	31	7.9	12
37677		35	18	32	8.9	13.5
37678		50	20	36	11.1	16.1

Double ferrules

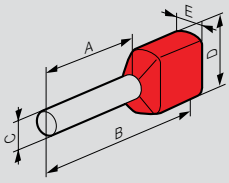

Cat no.	Cross-section (mm²)	A	B	C	D	E
37687	2 x 0.75	8	15	2.1	6	3.3
37688	2 x 1	8	15	2.35	6	4
37689	2 x 1.5	8	16	2.6	7.2	4.2
37690	2 x 2.5	10	18.5	3.3	8.4	4.8

VIKING™ 3

Strength, security and time saving connections

Viking™ 3 terminal block, screw connection:

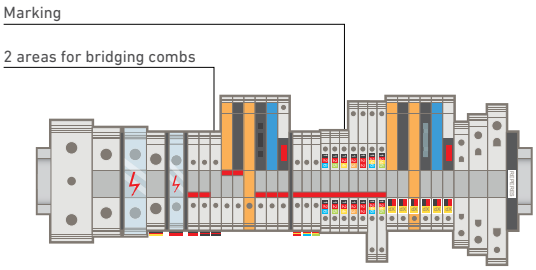

Viking™ 3 terminal blocks are the core of a reliable and easy to use connection system, together with the CAB 3 marking system and Starfix ferrules and crimping tools

Screw connection

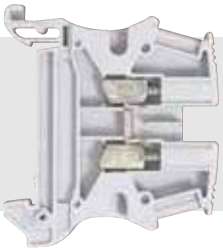

High contact pressure
Excellent mechanical strength
Permissible cross sections : 0.25mm² to 70mm² (flexible wire) and 0.25mm² to 95 mm² (rigid wire)
Identical height for blocks of 16mm² to 70mm²

Other advantages of the range

Single end caps for pitches of 5 to 10mm

Identical height for blocks of 16mm² to 70mm²

Integrated end caps or pitches of 6 to 12mm

Addition of functions on module for equipping: standard, neutral or protected isolation, mini circuit breaker, automotive type fuse, etc.

Adaptable enclosures for any configuration

The Legrand XL3 Type tested boards are designed to meet the needs of all power distribution requirements up to 6300A providing optimum performance and easy installation, and are available in a wide range of sizes.

The XL3 power distribution systems are up to 6300A and allow you to design your distribution according to your needs and work habits.

XL3 4000 modular type tested boards:

- IP30 or IP55
- Up to 4 forms of separation
- Short circuit capacity withstanding up to 100kA/1sec
- Type tested according to IEC 60439 to IEC 61439
- Fully adaptable to the Legrand busbar trunking system
- Enclosure dimensions:

  - 2m or 2.2m high

  - 475, 725 or 975mm width

  - 475, 725 or 975mm depth
- Legrand DIN-rail equipment, ACB, MCCB and isolation switches up to 6300A

SWITCHES & POWERPOINTS

P. 106 Arteor 770 Series Switches

P. 120 Architectural Metal Switches

P. 125 Linea Switches

Switches & sockets

P. 141 Excel Life Dedicated Switches

P. 180 Excel Switches

P. 211 Como Switches

P. 219 Standard Switches

Weatherproof switches & sockets

P. 228 Aqua

FEATURED PRODUCTS

Linea

Improved slim switches and sockets

(p. 125)

Excel Life PIR Sensor

Energy-saving

(p. 167)

P. 107 Arteor 770 Series Powerpoints

P. 109 Arteor 770 Series Mechanisms

P. 112 Arteor 770 Series Grids & Coverplates

P. 118 Arteor Modular Series

P. 121 Architectural Metal Powerpoints

P. 122 Architectural Metal Mechanisms

P. 123 Architectural Metal Grids & Plates

P. 128 Linea Powerpoints

P. 129 Linea Phone, TV & Data Sockets

P. 130 Linea Grids & Plates

P. 131 Linea Coverplates

P. 144 Excel Life Dedicated Powerpoints

P. 147 Excel Life Dedicated Grids & Plates

P. 156 Excel Life Common Plates

P. 175 Excel Life Medical

P. 188 Excel Powerpoints

P. 195 Excel Phone, Tv & Data Sockets

P. 197 Excel Grids & Plates

P. 208 Mechanisms for Excel, Linea and Standard

P. 213 Como Powerpoints

P. 214 Como Phone, Tv & Data Sockets

P. 215 Como Mechanisms

P. 217 Como Coverplates & Accessories

P. 223 Standard Powerpoints

P. 225 Standard Phone, TV & Data Sockets

P. 226 Standard Plates

P. 229 Light Sensitive Switches

P. 231 Soliroc

Excel Life Powerpoint with Integrated USB Charger 2.4A and Powerpoint with Type A+C USB Charger

(p. 146)

Wireless Charging (Induction)

(p. 110)

Arteor 770 series

Switches to be installed with Arteor 770 series coverplates

AR770/1WE

AR770/2MGN

AR770/6WE

AR770/1HWE + 575434

AR770/4HWE

AR770/5HMGN + 575436

Cat.Nos	Vertical switches	UoM	Trade price $	GST $	Box qty	Carton qty
	Rocker switches - Single Pole Double Throw (SPDT)					
AR770/1WE	Switch 1 gang 2 way 16A 240V a.c. white	EA	$10.93	$1.09	10	120
AR770/1MGN	Switch 1 gang 2 way 16A 240V a.c. magnesium	EA	$12.58	$1.26	10	120
AR770/2WE	Switch 2 gang 2 way 16A 240V a.c. white	EA	$17.66	$1.77	10	120
AR770/2MGN	Switch 2 gang 2 way 16A 240V a.c. magnesium	EA	$20.32	$2.03	10	120
AR770/3WE	Switch 3 gang 2 way 16A 240V a.c. white	EA	$30.63	$3.06	10	120
AR770/3MGN	Switch 3 gang 2 way 16A 240V a.c. magnesium	EA	$35.23	$3.52	10	120
AR770/4WE	Switch 4 gang 2 way 16A 240V a.c. white	EA	$47.75	$4.78	10	120
AR770/4MGN	Switch 4 gang 2 way 16A 240V a.c. magnesium	EA	$54.95	$5.50	10	120
AR770/5WE	Switch 5 gang 2 way 16A 240V a.c. white	EA	$67.47	$6.75	10	120
AR770/5MGN	Switch 5 gang 2 way 16A 240V a.c. magnesium	EA	$77.58	$7.76	10	120
AR770/6WE	Switch 6 gang 2 way 16A 240V a.c. white	EA	$79.38	$7.94	10	120
AR770/6MGN	Switch 6 gang 2 way 16A 240V a.c. magnesium	EA	$91.29	$9.13	10	120

	Horizontal switches					
	Rocker switches - Single Pole Double Throw (SPDT)					
AR770/1HWE	Switch 1 gang 2 way 16A 240V a.c. white	EA	$10.93	$1.09	10	120
AR770/1HMGN	Switch 1 gang 2 way 16A 240V a.c. magnesium	EA	$12.58	$1.26	10	120
AR770/2HWE	Switch 2 gang 2 way 16A 240V a.c. white	EA	$17.66	$1.77	10	120
AR770/2HMGN	Switch 2 gang 2 way 16A 240V a.c. magnesium	EA	$20.32	$2.03	10	120
AR770/3HWE	Switch 3 gang 2 way 16A 240V a.c. white	EA	$30.63	$3.06	10	120
AR770/3HMGN	Switch 3 gang 2 way 16A 240V a.c. magnesium	EA	$35.23	$3.52	10	120
AR770/4HWE	Switch 4 gang 2 way 16A 240V a.c. white	EA	$47.75	$4.78	10	120
AR770/4HMGN	Switch 4 gang 2 way 16A 240V a.c. magnesium	EA	$54.95	$5.50	10	120
AR770/5HWE	Switch 5 gang 2 way 16A 240V a.c. white	EA	$67.47	$6.75	10	120
AR770/5HMGN	Switch 5 gang 2 way 16A 240V a.c. magnesium	EA	$77.58	$7.76	10	120
AR770/6HWE	Switch 6 gang 2 way 16A 240V a.c. white	EA	$79.38	$7.94	10	120
AR770/6HMGN	Switch 6 gang 2 way 16A 240V a.c. magnesium	EA	$91.29	$9.13	10	120

N New product | ECO Energy Saving products | More info available. See technical pages | COMING SOON Coming soon | Product to be discontinued

Whilst most items are stock lines some products are made to order. UoM = Unit Of Measure.
Prices are effective 1 June 2017 and are subject to change without notice. Trade prices exclude GST.

Arteor 770 series

Powerpoints to be installed with Arteor 770 series coverplates

AR777WE

AR777XMGN

AR777MGN

AR777USB2ACMGN

AR777AWE

AR777MGN + 575433

Cat.Nos	Horizontal powerpoints		UoM	Trade price $	GST $	Box qty	Carton qty
	Double powerpoints						
AR777WE	Powerpoint 2 gang 10A 240V a.c. white		EA	$22.19	$2.22	10	100
AR777MGN	Powerpoint 2 gang 10A 240V a.c. magnesium		EA	$25.50	$2.55	10	100
AR777XWE	Powerpoint 2 gang 10A 240V a.c. with extra switch white		EA	$46.11	$4.61	10	120
AR777XMGN	Powerpoint 2 gang 10A 240V a.c. with extra switch magnesium		EA	$53.01	$5.30	10	120
AR777AWE	Powerpoint 2 gang 10A 240V a.c. autoswitch white		EA	$22.83	$2.28	10	50
AR777AMGN	Powerpoint 2 gang 10A 240V a.c. autoswitch magnesium		EA	$26.73	$2.67	5	50
	Double powerpoints with dual USB charger Type A for plasterboard and single brick wall installations - engraved "USB chargers"						
AR777USBENGWE	Powerpoint 2 gang 10A 240V a.c. with USB charger 2x2.4A white	N	EA	$97.84	$9.78	-	12
AR777USBENGMGN	Powerpoint 2 gang 10A 240V a.c. with USB charger 2x2.4A magnesium	N	EA	$100.97	$10.10	-	12
	Double powerpoints with dual USB charger Type A and Type C for plasterboard and single brick wall installations						
AR777USB2ACWE	Powerpoint 2 gang 10A 240V a.c. with type A&C USB charger 2x2.4A white	N	EA	$103.68	$10.37	-	12
AR777USB2ACMGN	Powerpoint 2 gang 10A 240V a.c. with type A&C USB charger 2x2.4A magnesium	N	EA	$105.76	$10.58	-	12
	Double powerpoints with single USB charger Type C for plasterboard and single brick wall installations						
AR777USB1CWE	Powerpoint 2 gang 10A 240V a.c. with type C USB charger 45W white	COMING SOON	EA	$109.90	$10.90	-	12
AR777USB1CMGN	Powerpoint 2 gang 10A 240V a.c. with type C USB charger 45W magnesium	COMING SOON	EA	$111.90	$11.20	-	12

How to order Arteor

Select a function in white or magnesium

+

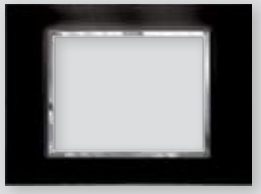
Select a coverplate

=

Complete product!

or

Choose the mechanism in white or magnesium

+

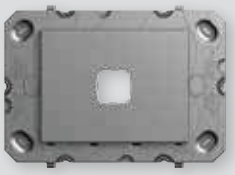
Select the grid in white or magnesium

+

Select a coverplate

=

Complete product!

N New product | ECO Energy Saving products | More info available. See technical pages | COMING SOON Coming soon | Product to be discontinued

Whilst most items are stock lines some products are made to order. UoM = Unit Of Measure.
Prices are effective 1 June 2017 and are subject to change without notice. Trade prices exclude GST.

Arteor 770 series

Mechanisms to be installed in Arteor 770 series grids

AR770MWE

AR770IMWE

AR770MZONE1WE

AR770MFANWE

AR770/35MOVENWE

Cat.Nos	Switch mechanisms	UoM	Trade price $	GST $	Box qty	Carton qty
	Rocker mechanisms					
AR770MWE	Switch mech. 2 way 35A 250V a.c. white	EA	$11.29	$1.13	10	100
AR770MMGN	Switch mech. 2 way 35A 250V a.c. magnesium	EA	$13.20	$1.32	10	100
AR770IMWE	Switch mech. intermediate 2 way 16A 250V a.c. white	EA	$48.04	$4.80	10	100
AR770IMMGN	Switch mech. intermediate 2 way 16A 250V a.c. magnesium	EA	$55.25	$5.52	10	100
AR770XMWE	Switch mech. spring return 2 way 16A 250V a.c. white	EA	$10.48	$1.05	10	100
AR770XMMGN	Switch mech. spring return 2 way 16A 250V a.c. magnesium	EA	$12.04	$1.20	10	100
AR769P16MWE	Switch mech. double pole 2 way 16A 250V a.c. white	EA	$43.21	$4.32	10	100
AR769P16MMGN	Switch mech. double pole 2 way 16A 250V a.c. magnesium	EA	$49.70	$4.97	10	100
AR770/202MWE	Switch mech. 2 way 20A 250V a.c. white	EA	$25.22	$2.52	10	100
AR770/202MMGN	Switch mech. 2 way 20A 250V a.c. magnesium	EA	$29.00	$2.90	10	100
AR770/35MWE	Switch mech. 2 way 35A 250V a.c. white	EA	$27.39	$2.74	10	100
AR770/35MMGN	Switch mech. 2 way 35A 250V a.c. magnesium	EA	$31.50	$3.15	10	100
	Engraved rocker mechanisms					
AR770MFANWE	Switch mech. 2 way 16A 250V a.c. "fan" engraved white	EA	$18.60	$1.86	10	100
AR770MFANMGN	Switch mech. 2 way 16A 250V a.c. "fan" engraved magnesium	EA	$20.32	$2.03	10	100
AR770MHEATWE	Switch mech. 2 way 16A 250V a.c. "heat" engraved white	EA	$18.60	$1.86	10	100
AR770MHEATMGN	Switch mech. 2 way 16A 250V a.c. "heat" engraved magnesium	EA	$20.32	$2.03	10	100
AR770MLIGHTWE	Switch mech. 2 way 16A 250V a.c. "light" engraved white	EA	$18.60	$1.86	10	100
AR770MLIGHTMGN	Switch mech. 2 way 16A 250V a.c. "light" engraved magnesium	EA	$20.32	$2.03	10	100
AR770MONOFFWE	Switch mech. 2 way 16A 250V a.c. "onoff" engraved white	EA	$18.60	$1.86	10	100
AR770MONOFFMGN	Switch mech. 2 way 16A 250V a.c. "onoff" engraved magnesium	EA	$20.32	$2.03	10	100
AR770MWASTEWE	Switch mech. 2 way 16A 250V a.c. "waste" engraved white	EA	$18.60	$1.86	10	100
AR770MWASTEMGN	Switch mech. 2 way 16A 250V a.c. "waste" engraved magnesium	EA	$20.32	$2.03	10	100
AR770MZONE1WE	Switch mech. 2 way 16A 250V a.c. "zone1" engraved white	EA	$18.60	$1.86	10	100
AR770MZONE1MGN	Switch mech. 2 way 16A 250V a.c. "zone1" engraved magnesium	EA	$20.32	$2.03	10	100
AR770MZONE2WE	Switch mech. 2 way 16A 250V a.c. "zone2" engraved white	EA	$18.60	$1.86	10	100
AR770MZONE2MGN	Switch mech. 2 way 16A 250V a.c. "zone2" engraved magnesium	EA	$20.32	$2.03	10	100
AR770MZONE3WE	Switch mech. 2 way 16A 250V a.c. "zone3" engraved white	EA	$18.60	$1.86	10	100
AR770MZONE3MGN	Switch mech. 2 way 16A 250V a.c. "zone3" engraved magnesium	EA	$20.32	$2.03	10	100
AR770MZONE4WE	Switch mech. 2 way 16A 250V a.c. "zone4" engraved white	EA	$18.60	$1.86	10	100
AR770MZONE4MGN	Switch mech. 2 way 16A 250V a.c. "zone4" engraved magnesium	EA	$20.32	$2.03	10	100
AR770/35MOVENWE	Switch mech. 2 way 35A 250V a.c. “oven” engraved white	EA	$34.49	$3.45	10	100
AR770/35MOVENMG	Switch mech. 2 way 35A 250V a.c. “oven” engraved magnesium	EA	$38.60	$3.86	10	100

N New product | ECO Energy Saving products | More info available. See technical pages | COMING SOON Coming soon | Product to be discontinued

Whilst most items are stock lines some products are made to order. UoM = Unit Of Measure.
Prices are effective 1 June 2017 and are subject to change without notice. Trade prices exclude GST.

Arteor 770 series

Mechanisms to be installed in Arteor 770 series grids

AR870MWE

AR400TMWE

AR400A3PMWE

AR450SMMGN

AR770USB2PSAMWE

Cat.Nos	Switch mechanisms	UoM	Trade price $	GST $	Box qty	Carton qty
	Push-button mechanisms					
AR870MWE	Switch mech. push-button 2 way 10A 250V a.c. white	EA	$10.24	$1.02	10	100
AR870MMGN	Switch mech. push-button 2 way 10A 250V a.c. magnesium	EA	$11.77	$1.18	10	100
AR883MWE	Electronic push-button 5A 250V a.c. white	EA	$55.29	$5.53	10	120
AR883MMGN	Electronic push-button 5A 250V a.c. magnesium	EA	$59.09	$5.91	10	120
	Rotary dimmer mechanisms					
	Leading edge					
AR400LMWE	Dimmer mech. leading edge 2 wire 400VA 240V a.c. white (ECO)	EA	$67.62	$6.76	10	100
AR400LMMGN	Dimmer mech. leading edge 2 wire 400VA 240V a.c. magnesium (ECO)	EA	$77.76	$7.78	10	100
	Trailing edge					
AR400TMWE	Dimmer mech. trailing edge 2 wire 400VA 240V a.c. white (ECO)	EA	$81.18	$8.12	10	100
AR400TMMGN	Dimmer mech. trailing edge 2 wire 400VA 240V a.c. magnesium (ECO)	EA	$84.99	$8.50	10	100
	Push-button dimmer mechanisms					
	2 wire					
AR400A2PMWE	Dimmer mech. push-button all load 2 wire 400VA 240V a.c. white (ECO)	EA	$82.40	$8.24	10	120
AR400A2PMMGN	Dimmer mech. push-button all load 2 wire 400VA 240V a.c. magnesium (ECO)	EA	$84.79	$8.48	10	120
	3 wire					
AR400A3PMWE	Dimmer mech. push-button all load 3 wire 400VA 240V a.c. white (ECO)	EA	$85.13	$8.51	10	120
AR400A3PMMGN	Dimmer mech. push-button all load 3 wire 400VA 240V a.c. magnesium (ECO)	EA	$88.95	$8.90	10	120
	Secondary					
AR450SMWE	Dimmer mech. push-button secondary 450VA 240V a.c. white (ECO)	EA	$38.47	$3.85	10	100
AR450SMMGN	Dimmer mech. push-button secondary 450VA 240V a.c. magnesium (ECO)	EA	$44.43	$4.44	10	100
	USB charger mechanisms					
	For plasterboard or single brick installations					
AR770USB2PSAMWE	Dual USB charger mech. 2x2.4A 250V a.c. white	EA	$54.39	$5.44	-	12
AR770USB2PSAMMG	Dual USB charger mech. 2x2.4A 250V a.c. magnesium	EA	$56.48	$5.65	-	12
	For wall box, fire box or double brick installations					
AR770USB2PSXMWE	Dual USB charger mech. 2x2.4A 250V a.c. with inline connector white	EA	$60.64	$6.06	-	12
AR770USB2PSXMMG	Dual USB charger mech. 2x2.4A 250V a.c. with inline connector magnesium	EA	$62.73	$6.27	-	12
	Extension lead for dual USB charger mechanisms AR770USB2PSX series					
EAUSBEXT3WE	Extension lead 3m with connectors for AR770USB2PSX USB charger mechanisms	EA	$22.80	$2.28	-	-

N New product | ECO Energy Saving products | More info available. See technical pages | Coming soon | Product to be discontinued

Whilst most items are stock lines some products are made to order. UoM = Unit Of Measure.
Prices are effective 1 June 2017 and are subject to change without notice. Trade prices exclude GST.

Arteor 770 series

USB charger mechanisms and wireless charging stations

AR770USB2ACMMGN

AR770USB1CMWE

Cat.Nos	USB charger mechanisms		UoM	Trade price $	GST $	Box qty	Carton qty
	For plasterboard or single brick wall installations - Dual type A&C						
AR770USB2ACMWE	USB charger mech. dual type A&C 2x2.4A white	N	EA	$62.90	$6.29	-	12
AR770USB2ACMMGN	USB charger mech. dual type A&C 2x2.4A magnesium	N	EA	$64.20	$6.42	-	12
	For plasterboard or single brick wall installations - Single type C						
AR770USB1CMWE	USB charger mech. type C 45W white	COMING SOON	EA	$72.90	$7.29	-	12
AR770USB1CMMGN	USB charger mech. type C 45W magnesium	COMING SOON	EA	$74.20	$7.42	-	12
	Wireless Charging - Induction						
	Wall mount wireless charging station						
EDWCWEMS	Wireless charger 1A with Type A USB port 2.4A silver	COMING SOON	EA	$92.90	$9.30	1	10
	Tamper-proof outdoor wireless charger						
077599	Wireless charger 1A IK08-IP66 (80051 to be used for mounting)	COMING SOON	EA	$112.90	$11.30	1	10
	Table top mount wireless charger pad						
077580	Wireless charging pad 1A IK04-IP4 80mm cut-out supplied with 2.5mm	COMING SOON	EA	$57.00	$5.70	1	10

N New product | ECO Energy Saving products | More info available. See technical pages | COMING SOON Coming soon | Product to be discontinued

Whilst most items are stock lines some products are made to order. UoM = Unit Of Measure.
Prices are effective 1 June 2017 and are subject to change without notice. Trade prices exclude GST.

Arteor 770 series

Grids for Arteor 770 series

AR770/1GOWE

AR770/2GOMGN

AR770/3GOWE +
AR400A3PMWE x 3 + 575430

AR770/4GOMGN

AR770/5GOWE

AR770/6GOWE

Cat.Nos	Grids	UoM	Trade price $	GST $	Box qty	Carton qty
AR770/1GOWE	Grid 1 gang white	EA	$6.59	$0.66	10	120
AR770/1GOMGN	Grid 1 gang magnesium	EA	$7.60	$0.76	10	120
AR770/2GOWE	Grid 2 gang white	EA	$6.59	$0.66	10	120
AR770/2GOMGN	Grid 2 gang magnesium	EA	$7.60	$0.76	10	120
AR770/3GOWE	Grid 3 gang white	EA	$6.59	$0.66	10	120
AR770/3GOMGN	Grid 3 gang magnesium	EA	$7.60	$0.76	10	120
AR770/4GOWE	Grid 4 gang white	EA	$6.59	$0.66	10	120
AR770/4GOMGN	Grid 4 gang magnesium	EA	$7.60	$0.76	10	120
AR770/5GOWE	Grid 5 gang white	EA	$6.59	$0.66	10	120
AR770/5GOMGN	Grid 5 gang magnesium	EA	$7.60	$0.76	10	120
AR770/6GOWE	Grid 6 gang white	EA	$6.59	$0.66	10	120
AR770/6GOMGN	Grid 6 gang magnesium	EA	$7.60	$0.76	10	120

Arteor 770 series

Coverplates for Arteor 770 series grids and mechanisms

575430

575431

575434

575433

576476

575436

Cat.Nos	Coverplates	UoM	Trade price $	GST $	Box qty	Carton qty
575430	Coverplate Arteor 770 series white	EA	$3.43	$0.34	5	50
575431	Coverplate Arteor 770 series pearl alu	EA	$6.13	$0.61	5	50
575432	Coverplate Arteor 770 series graphite	EA	$6.25	$0.62	5	50
576478	Coverplate Arteor 770 series tattoo	EA	$19.18	$1.92	5	50
576471	Coverplate Arteor 770 series casual	EA	$47.95	$4.80	-	40
576472	Coverplate Arteor 770 series formal	EA	$47.95	$4.80	-	40
575434	Coverplate Arteor 770 series mirror white	EA	$46.77	$4.68	-	40
575433	Coverplate Arteor 770 series mirror black	EA	$46.77	$4.68	-	40
576476	Coverplate Arteor 770 series mirror red	EA	$47.63	$4.76	-	40
576475	Coverplate Arteor 770 series mirror taupe	EA	$47.63	$4.76	-	40
575436	Coverplate Arteor 770 series stainless steel	EA	$58.45	$5.84	-	40
576470	Coverplate Arteor 770 series gold brass	EA	$57.52	$5.75	-	40
575435	Coverplate Arteor 770 series wenge wood	EA	$86.32	$8.63	-	40
576479	Coverplate Arteor 770 series oak	EA	$86.32	$8.63	-	40
576474	Coverplate Arteor 770 series galuchat	EA	$208.47	$20.85	-	40
576473	Coverplate Arteor 770 series leather club	EA	$110.28	$11.03	-	40
576477	Coverplate Arteor 770 series woven metal	EA	$155.84	$15.58	-	40

Arteor modular series

Mechanisms to be installed in Arteor modular series grids

571917

572511

572544

572044

572015

Cat.Nos	Switch mechanism	UoM	Trade price $	GST $	Box qty	Carton qty
	Rocker mechanisms					
571917	Switch 2 way 16A 250V a.c. 1 module white	EA	$13.47	$1.35	10	100
571967	Switch 2 way 16A 250V a.c. 1 module magnesium	EA	$15.78	$1.58	10	100
571927	Switch 2 way 16A 250V a.c. with LED 1 module white	EA	$17.10	$1.71	10	100
571977	Switch 2 way 16A 250V a.c. with LED 1 module magnesium	EA	$22.61	$2.26	10	100
571919	Switch 2 way 16A 250V a.c. 2 module white	EA	$13.70	$1.37	10	100
571969	Switch 2 way 16A 250V a.c. 2 module magnesium	EA	$15.78	$1.58	10	100
571929	Switch 2 way 16A 250V a.c. with LED 2 module white	EA	$17.10	$1.71	10	100
571979	Switch 2 way 16A 250V a.c. with LED 2 module magnesium	EA	$22.61	$2.26	10	100
572010	Switch 2 way 20A 250V a.c. 1 module white	EA	$38.37	$3.84	10	100
572510	Switch 2 way 20A 250V a.c. 1 module magnesium	EA	$44.12	$4.41	10	100
572011	Switch 2 way 20A 250V a.c. with LED 1 module white	EA	$37.53	$3.75	10	100
572511	Switch 2 way 20A 250V a.c. with LED 1 module magnesium	EA	$43.14	$4.31	5	100
572042	Switch 2 way 20A 250V a.c. with LED 2 module white	EA	$46.89	$4.69	10	100
572542	Switch 2 way 20A 250V a.c. with LED 2 module magnesium	EA	$53.94	$5.39	5	100
572044	Switch 2x2 way+1 way 20A 250V a.c. 2 module white	EA	$20.85	$2.08	10	100
572544	Switch 2x2 way+1 way 20A 250V a.c. 2 module magnesium	EA	$23.96	$2.40	10	100
572048	Switch 2 way double pole 20A 250V a.c. 2 module white	EA	$33.36	$3.34	10	100
572548	Switch 2 way double pole 20A 250V a.c. 2 module magnesium	EA	$38.37	$3.84	10	100
572047	Switch 2 way double pole 20A 250V a.c. with red LED 2 module white	EA	$54.21	$5.42	10	100
572547	Switch 2 way double pole 20A 250V a.c. with red LED 2 module magnesium	EA	$62.32	$6.23	10	100
	Push-button mechanisms					
572000	Push-button 1 way 6A 250V a.c. 1 module white	EA	$5.50	$0.55	10	100
572500	Push-button 1 way 6A 250V a.c. 1 module magnesium	EA	$6.32	$0.63	10	100
572001	Push-button 2 way 6A 250V a.c. 1 module white	EA	$7.16	$0.72	10	100
572501	Push-button 2 way 6A 250V a.c. 1 module magnesium	EA	$8.25	$0.82	10	100
572002	Push-button 2 way 6A 250V a.c. with blue LED 1 module white	EA	$7.88	$0.79	10	100
572502	Push-button 2 way 6A 250V a.c. with blue LED 1 module magnesium	EA	$9.06	$0.91	10	100
572003	Push-button 2 way 6A 250V a.c. with label holder 1 module white	EA	$7.88	$0.79	10	100
572503	Push-button 2 way 6A 250V a.c. with label holder 1 module magnesium	EA	$9.06	$0.91	10	100
572015	Push-button 1 way 6A 250V a.c. with bell symbol 1 module white	EA	$7.46	$0.75	10	100
572515	Push-button 1 way 6A 250V a.c. with bell symbol 1 module magnesium	EA	$8.60	$0.86	10	100
572016	Push-button 6A 250V a.c. with blue LED & bell symbol 1 module white	EA	$9.05	$0.90	10	100
572516	Push-button 6A 250V a.c. with blue LED & bell symbol 1 module magnesium	EA	$12.00	$1.20	10	100

N New product | ECO Energy Saving products | More info available. See technical pages | COMING SOON Coming soon | Product to be discontinued

Whilst most items are stock lines some products are made to order. UoM = Unit Of Measure.
Prices are effective 1 June 2017 and are subject to change without notice. Trade prices exclude GST.

Arteor modular series

Mechanisms to be installed in Arteor modular series grids

572033

AR920/770AMWE

AR787WE

AR787AMWE

AR787ARMMGN

572239

Cat.Nos	Switch mechanism	UoM	Trade price $	GST $	Box qty	Carton qty
	Push-button mechanisms					
572030	Push-button 1 way 6A 250V a.c. 2 module white	EA	$6.90	$0.69	10	100
572530	Push-button 1 way 6A 250V a.c. 2 module magnesium	EA	$7.92	$0.79	10	100
572031	Push-button 2 way 6A 250V a.c. 2 module white	EA	$9.00	$0.90	10	100
572531	Push-button 2 way 6A 250V a.c. 2 module magnesium	EA	$10.34	$1.03	10	100
572032	Push-button 2 way 6A 250V a.c. with blue LED 2 module white	EA	$9.00	$0.90	10	100
572532	Push-button 2 way 6A 250V a.c. with blue LED 2 module magnesium	EA	$9.00	$0.90	10	100
572033	Push-button 2 way 6A 250V a.c. with label holder 2 module white	EA	$7.88	$0.79	10	100
572533	Push-button 2 way 6A 250V a.c. with label holder 2 module magnesium	EA	$9.06	$0.91	10	100
572056	Push-button 1 way 6A 250V a.c. with bell symbol 2 module white	EA	$8.33	$0.83	10	100
572556	Push-button 1 way 6A 250V a.c. with bell symbol 2 module magnesium	EA	$9.59	$0.96	10	100
	Dimmer mechanisms					
572239	Universal dimmer 2 wire 250V a.c. 2 module white (COMING SOON)	EA	$133.00	$13.30	10	100
572739	Universal dimmer 2 wire 250V a.c. 2 module magnesium (COMING SOON)	EA	$139.00	$13.90	10	100
	Blank modules					
572341	Blank 1 module plastic white	EA	$2.11	$0.21	10	100
572841	Blank 1 module plastic magnesium	EA	$2.43	$0.24	10	100
572342	Blank 2 module plastic white	EA	$2.43	$0.24	10	100
572842	Blank 2 module plastic magnesium	EA	$4.79	$0.48	10	100
572343	Blank 3 module plastic white	EA	$5.22	$0.52	10	100
572843	Blank 3 module plastic magnesium	EA	$6.00	$0.60	10	100
	Adaptor module for 770 mechanisms					
AR920/770AMWE	Arteor 2 module adaptor for 770 series mechanisms white	EA	$3.59	$0.36	10	100
AR920/770AMMGN	Arteor 2 module adaptor for 770 series mechanisms magnesium	EA	$4.41	$0.44	10	100
	Powerpoint mechanisms					
	Single powerpoint mechanisms					
AR787WE	Powerpoint 1 gang 10A 240V a.c. white	EA	$14.52	$1.45	10	100
AR787MGN	Powerpoint 1 gang 10A 240V a.c. magnesium	EA	$16.73	$1.67	10	100
AR787AMWE	Powerpoint 1 gang 10A 240V a.c. autoswitch white	EA	$14.27	$1.43	10	100
AR787AMMGN	Powerpoint 1 gang 10A 240V a.c. autoswitch magnesium	EA	$16.73	$1.67	10	100
AR787ARMWE	Powerpoint 1 gang 10A 240V a.c. autoswitch with round earth white	EA	$55.64	$5.56	10	100
AR787ARMMGN	Powerpoint 1 gang 10A 240V a.c. autoswitch with round earth magnesium	EA	$64.00	$6.40	10	100
AR787/15AMWE	Powerpoint 1 gang 15A 240V a.c. autoswitch white	EA	$28.82	$2.88	10	100
AR787/15AMMGN	Powerpoint 1 gang 15A 240V a.c. autoswitch magnesium	EA	$33.14	$3.31	10	100

N New product | ECO Energy Saving products | More info available. See technical pages | COMING SOON Coming soon | Product to be discontinued

Whilst most items are stock lines some products are made to order. UoM = Unit Of Measure.
Prices are effective 1 June 2017 and are subject to change without notice. Trade prices exclude GST.

Arteor modular series

Mechanisms to be installed in Arteor modular series grids

572163

572800

572802

AR9102FFFOXMWE

572315

Cat.Nos	Phone, TV, data & AV sockets	UoM	Trade price $	GST $	Box qty	Carton qty
	Phone sockets					
572300	Phone mech. 4 contacts 1 module white	EA	$11.09	$1.11	10	100
572800	Phone mech. 4 contacts 1 module magnesium	EA	$12.76	$1.28	10	100
572312	Phone mech. 6 contacts 2 module white	EA	$11.09	$1.11	10	100
572812	Phone mech. 6 contacts 2 module magnesium	EA	$12.76	$1.28	10	100
572313	Phone mech. 4 contacts 2 module white	EA	$11.09	$1.11	10	100
572813	Phone mech. 4 contacts 2 module magnesium	EA	$12.76	$1.28	10	100
	Phone/Ethernet wiring splitter					
572335	Tel./data splitter UTP double connector 10/100Mbps 1 module white	EA	$28.96	$2.90	10	100
572835	Tel./data splitter UTP double connector 10/100Mbps 1 module magnesium	EA	$33.31	$3.33	10	100
	TV sockets					
572163	TV socket F-type shielded with screws 0-2.4GHz 1 module white	EA	$5.50	$0.55	10	100
572663	TV socket F-type shielded with screws 0-2.4GHz 1 module magnesium	EA	$6.32	$0.63	10	100
571907	TV socket F-type cable & pay TV 0-2.4GHz 1 module white	EA	$7.23	$0.72	10	100
571957	TV socket F-type cable & pay TV 0-2.4GHz 1 module magnesium	EA	$8.29	$0.83	10	100
572171	TV socket male shielded 0-2.4GHz 1 module white	EA	$5.63	$0.56	10	100
572671	TV socket male shielded 0-2.4GHz 1 module magnesium	EA	$6.32	$0.63	10	100
AR9102FFFOXMWE	TV mech. Foxtel approved 3GHz 1 module white	EA	$11.79	$1.18	10	120
AR9102FFFOXMMGN	TV mech. Foxtel approved 3GHz 1 module magnesium	EA	$12.85	$1.28	10	120
	RJ45 sockets - fast connection LCS²					
572306	RJ45 mech. STP Cat6A Fast connection 1 module white COMING SOON	EA	$19.90	$1.99	10	100
572806	RJ45 mech. STP Cat6A Fast connection 1 module magnesium COMING SOON	EA	$21.90	$2.19	10	100
572349	RJ45 mech. UTP Cat6A Fast connection 1 module white COMING SOON	EA	$16.90	$1.69	10	100
572849	RJ45 mech. UTP Cat6A Fast connection 1 module magnesium COMING SOON	EA	$18.90	$1.89	10	100
572302	RJ45 mech. UTP Cat6 Fast connection 1 module white	EA	$15.11	$1.51	10	100
572802	RJ45 mech. UTP Cat6 Fast connection 1 module magnesium	EA	$17.38	$1.74	10	100
572314	RJ45 mech. UTP Cat6 Fast connection 2 module white	EA	$15.11	$1.51	10	100
572814	RJ45 mech. UTP Cat6 Fast connection 2 module magnesium	EA	$17.38	$1.74	10	100
572303	RJ45 mech. UTP Cat5e Fast connection 1 module white	EA	$14.36	$1.44	10	100
572803	RJ45 mech. UTP Cat5e Fast connection 1 module magnesium	EA	$16.52	$1.65	10	100
572315	RJ45 mech. UTP Cat5e Fast connection 2 module white	EA	$14.36	$1.44	10	100
572815	RJ45 mech. UTP Cat5e Fast connection 2 module magnesium	EA	$16.52	$1.65	10	100

N New product | ECO Energy Saving products | More info available. See technical pages | COMING SOON Coming soon | Product to be discontinued

Whilst most items are stock lines some products are made to order. UoM = Unit Of Measure.
Prices are effective 1 June 2017 and are subject to change without notice. Trade prices exclude GST.

Arteor modular series

Mechanisms to be installed in Arteor modular series grids

572331

572831

AR910USBMMGN

AR910HDMIMWE

Cat.Nos	Phone, TV, data & AV sockets	UoM	Trade price $	GST $	Box qty	Carton qty
	RJ45 sockets - rear pluggable					
572331	RJ45 mech. UTP Cat6 rear pluggable 2 module white	EA	$25.59	$2.56	10	100
572831	RJ45 mech. UTP Cat6 rear pluggable 2 module magnesium	EA	$29.47	$2.95	10	100
572330	RJ45 mech. UTP Cat5e rear pluggable 2 module white	EA	$24.32	$2.43	10	100
572830	RJ45 mech. UTP Cat5e rear pluggable 2 module magnesium	EA	$27.98	$2.80	10	100
	USB sockets					
AR910USBMWE	USB mech. v3 1 module white	EA	$36.23	$3.62	10	120
AR910USBMMGN	USB mech. v3 1 module magnesium	EA	$39.48	$3.95	10	120
	HDMI sockets					
AR910HDMIMWE	HDMI mech. v1.4 1 module white	EA	$38.14	$3.81	10	120
AR910HDMIMMGN	HDMI mech. v1.4 1 module magnesium	EA	$41.55	$4.16	10	120
572281	HDMI mech. 2 module white	EA	$59.77	$5.98	10	100

N New product | ECO Energy Saving products | More info available. See technical pages | COMING SOON Coming soon | Product to be discontinued

Whilst most items are stock lines some products are made to order. UoM = Unit Of Measure.
Prices are effective 1 June 2017 and are subject to change without notice. Trade prices exclude GST.

Arteor modular series

Mechanisms to be installed in Arteor modular series grids

572053

574062

572221

Cat.Nos	Electronic devices	UoM	Trade price $	GST $	Box qty	Carton qty
	Automatic switches					
572053	Auto. switch 3 wire 1000W 240V a.c. td 1s-16mn 3-1000 lux 2 module white ECO	EA	$116.47	$11.65	10	100
574061	Auto. switch 3 wire 400W 250V a.c. 2 module magnesium ECO	EA	$133.92	$13.39	-	20
572051	No touch switch 1000W 100/240V a.c. 2 module white ECO	EA	$190.66	$19.07	10	100
	Skirting lights					
572221	Skirting light 0.2/1W 230V a.c. 2 module white	EA	$64.89	$6.49	-	20
574082	Skirting light 0.2/1W 230V a.c. 2 module magnesium	EA	$74.66	$7.47	-	20
572226	Skirting light with IR sensor & alarm 1W 100-230V a.c. 2 module white	EA	$127.18	$12.72	-	20
572726	Skirting light with IR sensor & alarm 1W 100-230V a.c. 2 module magnesium	EA	$146.25	$14.62	-	20
	Time-delay switch					
572055	Time-delay 2 wire 1000W 240V a.c. 2 module white	EA	$181.52	$18.15	10	100
	Illuminated signs					
572225	LED sign blue 1W 240V a.c. accepts custom labels 2 module white frame	EA	$61.28	$6.13	10	100
572224	LED sign red or green 1W 240V a.c. accepts custom labels 2 module white frame	EA	$61.28	$6.13	10	100
572724	LED sign red or green 1W 240V a.c. accepts custom labels 2 module magnesium frame N	EA	$55.19	$5.52	10	100
572452	Illuminated light 1W 230V a.c. supplied with 4 coloured labels 1 module white	EA	$22.81	$2.28	10	100
572453	Overdoor lighting unit with red diffuser 2 module white	EA	$64.34	$6.43	10	100
572223	Overdoor lighting unit with white diffuser 2 module white	EA	$64.34	$6.43	10	100
	Lighting unit					
572222	Miniature safety lighting unit illuminates upon power failure 2 module white	EA	$195.37	$19.54	10	100
	Emergency stop button					
572363	Mushroom emergency push-button NO+NC 10A 240V a.c. 2 module yellow/red	EA	$33.89	$3.39	10	100
	Buzzers					
572204	Buzzer 230V a.c. 1 module white	EA	$42.92	$4.29	10	100
572207	Buzzer 230V a.c. 2 module white	EA	$110.06	$11.01	10	100

N New product | ECO Energy Saving products | More info available. See technical pages | COMING SOON Coming soon | Product to be discontinued

Whilst most items are stock lines some products are made to order. UoM = Unit Of Measure.
Prices are effective 1 June 2017 and are subject to change without notice. Trade prices exclude GST.

Arteor modular series

Coverplates for Arteor modular series

575250

575231

576431 + AR787AMWE

575254

575273

576435 + 572053

Cat.Nos	Square coverplates	UoM	Trade price $	GST $	Box qty	Carton qty
	White					
575250	Coverplate vertical 2 module white	EA	$3.50	$0.35	10	120
575230	Coverplate horizontal 2 module white	EA	$3.50	$0.35	10	120
575010	Coverplate horizontal 3 module white	EA	$3.50	$0.35	10	120
	Pearl aluminium					
575251	Coverplate vertical 2 module pearl alu	EA	$6.25	$0.62	10	120
575231	Coverplate horizontal 2 module pearl alu	EA	$6.25	$0.62	10	120
575011	Coverplate horizontal 3 module pearl alu	EA	$6.25	$0.62	5	50
	Graphite					
575252	Coverplate vertical 2 module graphite	EA	$6.25	$0.62	10	120
575232	Coverplate horizontal 2 module graphite	EA	$6.25	$0.62	10	120
575012	Coverplate horizontal 3 module graphite	EA	$6.25	$0.62	5	50
	Tattoo					
576438	Coverplate 2 module tattoo	EA	$19.18	$1.92	-	40
576458	Coverplate 3 module tattoo	EA	$19.18	$1.92	-	40
	Casual					
576431	Coverplate 2 module casual	EA	$47.95	$4.80	-	40
576451	Coverplate 3 module casual	EA	$47.95	$4.80	-	40
	Formal					
576432	Coverplate 2 module formal	EA	$47.95	$4.80	-	40
576452	Coverplate 3 module formal	EA	$47.95	$4.80	-	40
	Mirror white					
575254	Coverplate 2 module mirror white	EA	$47.63	$4.76	-	40
575274	Coverplate 3 module mirror white	EA	$47.63	$4.76	-	40
	Mirror black					
575253	Coverplate 2 module mirror black	EA	$47.63	$4.76	-	40
575273	Coverplate 3 module mirror black	EA	$47.63	$4.76	-	40
	Mirror red					
576436	Coverplate 2 module mirror red	EA	$47.63	$4.76	-	40
576456	Coverplate 3 module mirror red	EA	$47.63	$4.76	-	40
	Mirror taupe					
576435	Coverplate 2 module mirror taupe	EA	$47.63	$4.76	-	40
576455	Coverplate 3 module mirror taupe	EA	$47.63	$4.76	-	40

N New product | ECO Energy Saving products | More info available. See technical pages | COMING SOON Coming soon | Product to be discontinued

Whilst most items are stock lines some products are made to order. UoM = Unit Of Measure.
Prices are effective 1 June 2017 and are subject to change without notice. Trade prices exclude GST.

Arteor modular series

Coverplates and grids for Arteor modular series

575256

576430

576439

575275

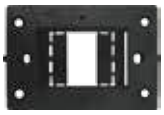
571920

571910

Cat.Nos	Square coverplates	UoM	Trade price $	GST $	Box qty	Carton qty
	Stainless steel – genuine materials					
575256	Coverplate 2 module stainless steel	EA	$59.52	$5.95	-	40
575276	Coverplate 3 module stainless steel	EA	$59.52	$5.95	-	40
	Gold brass					
576430	Coverplate 2 module gold brass	EA	$59.52	$5.95	-	40
576450	Coverplate 3 module gold brass	EA	$59.52	$5.95	-	40
	Light oak					
576439	Coverplate 2 module oak	EA	$86.32	$8.63	-	40
576459	Coverplate 3 module oak	EA	$86.32	$8.63	-	40
	Wenge style					
575255	Coverplate 2 module wenge wood	EA	$86.32	$8.63	-	40
575275	Coverplate 3 module wenge wood	EA	$86.32	$8.63	-	40
	Club leather					
576433	Coverplate 2 module leather club	EA	$110.28	$11.03	-	40
576453	Coverplate 3 module leather club	EA	$208.47	$20.85	-	40
	Galuchat leather					
576434	Coverplate 2 module galuchat	EA	$198.54	$19.85	-	40
576454	Coverplate 3 module galuchat	EA	$198.54	$19.85	-	40
	Woven metal					
576437	Coverplate 2 module woven metal	EA	$155.84	$15.58	-	40
576457	Coverplate 3 module woven metal	EA	$155.84	$15.58	-	40
	Blanks					
575410	Coverplate vertical blank for 2"x4" boxes metal white	EA	$3.50	$0.35	10	120
575411	Coverplate vertical blank for 2"x4" boxes metal pearl alu	EA	$6.25	$0.62	10	120
575412	Coverplate vertical blank for 2"x4" boxes metal graphite	EA	$6.25	$0.62	10	120
	Grids					
571910	Grid vertical 2 module 84mm mounting centres dark grey	EA	$2.30	$0.23	10	60
571920	Grid horizontal 2 or 3 module 84mm mounting centres dark grey	EA	$2.09	$0.21	10	60

N New product | ECO Energy Saving products | More info available. See technical pages | COMING SOON Coming soon | Product to be discontinued

Whilst most items are stock lines some products are made to order. UoM = Unit Of Measure.
Prices are effective 1 June 2017 and are subject to change without notice. Trade prices exclude GST.

Architectural Metal

Switches

MS770/1LPWE

MS770/2LPWE

MS770/3LPBL

MS770/5LPWE

MS770/6LPWE

Cat.Nos	Vertical switches	UoM	Trade price $	GST $	Box qty	Carton qty
	Rocker switches - Single Pole Double Throw (SPDT)					
MS770/1LPWE	Switch 1 gang 2 way 10A 240V a.c. white stainless steel plate	EA	$57.67	$5.77	5	-
MS770/1LPBL	Switch 1 gang 2 way 10A 240V a.c. black stainless steel plate	EA	$57.67	$5.77	5	-
MS770/2LPWE	Switch 2 gang 2 way 10A 240V a.c. white stainless steel plate	EA	$75.02	$7.50	5	-
MS770/2LPBL	Switch 2 gang 2 way 10A 240V a.c. black stainless steel plate	EA	$75.02	$7.50	5	-
MS770/3LPWE	Switch 3 gang 2 way 10A 240V a.c. white stainless steel plate	EA	$90.04	$9.00	5	-
MS770/3LPBL	Switch 3 gang 2 way 10A 240V a.c. black stainless steel plate	EA	$90.04	$9.00	5	-
MS770/4LPWE	Switch 4 gang 2 way 10A 240V a.c. white stainless steel plate	EA	$109.16	$10.92	5	-
MS770/4LPBL	Switch 4 gang 2 way 10A 240V a.c. black stainless steel plate	EA	$109.16	$10.92	5	-
MS770/5LPWE	Switch 5 gang 2 way 10A 240V a.c. white stainless steel plate	EA	$127.17	$12.72	5	-
MS770/5LPBL	Switch 5 gang 2 way 10A 240V a.c. black stainless steel plate	EA	$127.17	$12.72	5	-
MS770/6LPWE	Switch 6 gang 2 way 10A 240V a.c. white stainless steel plate	EA	$150.11	$15.01	5	-

Architectural Metal

Powerpoints

MS791LPWE

MS798

MS798EL30

MS777LPWE

MS788LPWE

Cat.Nos	Horizontal powerpoints	UoM	Trade price $	GST $	Box qty	Carton qty
	Single powerpoints					
MS791LPWE	Powerpoint 1 gang 10A 240V a.c. white stainless steel plate	EA	$78.55	$7.86	10	100
MS791LPBL	Powerpoint 1 gang 10A 240V a.c. black stainless steel plate	EA	$79.03	$7.90	10	100
MS791/15LPWE	Powerpoint 1 gang 15A 240V a.c. white stainless steel plate	EA	$91.06	$9.11	10	100
MS791/15LPBL	Powerpoint 1 gang 15A 240V a.c. black stainless steel plate	EA	$91.88	$9.19	10	100
	Single powerpoints with shaver outlet					
MS798	Powerpoint 1 gang 10A 240V a.c. with shaver outlet and safety shutters white	EA	$446.07	$44.61	-	-
MS798BL	Powerpoint 1 gang 10A 240V a.c. with shaver outlet and safety shutters black	EA	$446.07	$44.61	-	-
MS798EL30	Powerpoint 1 gang 10A 240V a.c. with shaver outlet and RCD 30mA white	EA	$886.09	$88.61	-	-
	Double powerpoints					
MS777LPWE	Powerpoint 2 gang 10A 240V a.c. white stainless steel plate	EA	$124.48	$12.45	5	50
MS777LPBL	Powerpoint 2 gang 10A 240V a.c. black stainless steel plate	EA	$124.48	$12.45	-	-
MS777NSLPWE	Powerpoint 2 gang 10A 240V a.c. white with safety shutters & neons stainless steel plate	EA	$188.31	$18.83	-	-
MS777NSLPBL	Powerpoint 2 gang 10A 240V a.c. black with safety shutters & neons stainless steel plate	EA	$188.31	$18.83	5	-
MS777XLPWE	Powerpoint 2 gang 10A 240V a.c. white with extra switch stainless steel plate	EA	$141.21	$14.12	5	-
MS777XLPBL	Powerpoint 2 gang 10A 240V a.c. black with extra switch stainless steel plate	EA	$141.21	$14.12	5	-
MS738/20LPWE	Powerpoint 2 gang 20A 240V a.c. white stainless steel plate	EA	$115.03	$11.50	5	-
MS738/20LPBL	Powerpoint 2 gang 20A 240V a.c. black stainless steel plate	EA	$115.03	$11.50	5	-
	Vertical powerpoints					
	Single powerpoints					
MS788LPWE	Powerpoint 1 gang 10A 240V a.c. white stainless steel plate	EA	$79.28	$7.93	-	-
MS788LPBL	Powerpoint 1 gang 10A 240V a.c. black stainless steel plate	EA	$79.28	$7.93	-	-
MS788/15PLPWE	Powerpoint 1 gang 15A 240V a.c. white stainless steel plate	EA	$96.41	$9.64	-	-
	Single powerpoints with shaver outlet					
MS798V	Powerpoint 1 gang 10A 240V a.c. with shaver outlet & safety shutters white	EA	$446.07	$44.61	-	-
MS798VBL	Powerpoint 1 gang 10A 240V a.c. with shaver outlet & safety shutters black	EA	$446.07	$44.61	-	-
MS798VEL30	Powerpoint 1 gang 10A 240V a.c. with shaver outlet & RCD 30mA white	EA	$886.09	$88.61	-	-

N New product | ECO Energy Saving products | More info available. See technical pages | COMING SOON Coming soon | Product to be discontinued

Whilst most items are stock lines some products are made to order. UoM = Unit Of Measure.
Prices are effective 1 June 2017 and are subject to change without notice. Trade prices exclude GST.

Architectural Metal

Mechanisms

M787MWE

M788MWE

M788NSMWE

Cat.Nos	Powerpoint mechanisms	UoM	Trade price $	GST $	Box qty	Carton qty
	Horizontal					
M787MWE	Single powerpoint mech. 10A 240V a.c. white	EA	$30.74	$3.07	10	-
M787MBL	Single powerpoint mech. 10A 240V a.c. black	EA	$30.74	$3.07	10	-
	Vertical					
M788MWE	Single powerpoint mech. 10A 240V a.c. white	EA	$30.74	$3.07	10	-
M788MBL	Single powerpoint mech. 10A 240V a.c. black	EA	$30.74	$3.07	10	-
M788MRED	Single powerpoint mech. 10A 240V a.c. red	EA	$38.68	$3.87	10	-
M788NSMWE	Single powerpoint mech. 10A 240V a.c. with safety shutters & red neon white	EA	$55.97	$5.60	10	-
M788NSMCR	Single powerpoint mech. 10A 240V a.c. with safety shutters & red neon cream	EA	$66.22	$6.62	10	-
M788NSMRED	Single powerpoint mech. 10A 240V a.c. with safety shutters & red neon red	EA	$63.91	$6.39	10	-
M788PMWE	Single powerpoint mech. double pole 10A 240V a.c. white	EA	$49.02	$4.90	10	-
M788PNSMWE	Single powerpoint mech. double pole 10A 240V a.c. with safety shutters & red neon white	EA	$71.28	$7.13	10	-
M788PNSMBL	Single powerpoint mech. double pole 10A 240V a.c. with safety shutters & red neon black	EA	$71.28	$7.13	10	-
M788PNSMRED	Single powerpoint mech. double pole 10A 240V a.c. with safety shutters & red neon red	EA	$79.26	$7.93	10	-
M788PNHMWE	Single powerpoint mech. double pole 10A 240V a.c. with safety shutters & red neon hospital use white	EA	$87.49	$8.75	10	-
M788PNHMSP	Single powerpoint mech. double pole 10A 240V a.c. with safety shutters & amber neon	EA	$108.69	$10.87	10	-
M78815MWE	Single powerpoint mech. 15A 240V a.c. white	EA	$35.89	$3.59	10	-

Architectural Metal

Grid & plates

MS770/1GPOLPWE

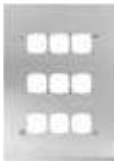

ES3-3

MG670WE

Cat.Nos	Grid & plates	UoM	Trade price $	GST $	Box qty	Carton qty
MS770/1GPOLPWE	Grid & stainless steel plate 1 gang white	EA	$44.83	$4.48	-	-
MS770/1GPOLPBL	Grid & stainless steel plate 1 gang black	EA	$51.67	$5.17	-	-
MS770/2GPOLPWE	Grid & stainless steel plate 2 gang white	EA	$53.95	$5.40	-	-
MS770/3GPOLPWE	Grid & stainless steel plate 3 gang white	EA	$57.84	$5.78	-	-
MS770/4GPOLPWE	Grid & stainless steel plate 4 gang white	EA	$66.08	$6.61	-	-
MS770/5GPOLPWE	Grid & stainless steel plate 5 gang white	EA	$74.15	$7.42	-	-
MS770/6GPOLPWE	Grid & stainless steel plate 6 gang white	EA	$75.22	$7.52	-	-
ES3-2	Grid & stainless steel plate 6 gang white with wall box	EA	$334.57	$33.46	-	-
ES4-2WE	Grid & stainless steel plate 8 gang white with wall box	EA	$523.43	$52.34	-	-
ES4-2BL	Grid & stainless steel plate 8 gang black with wall box	EA	$523.43	$52.34	-	-
ES3-3	Grid & stainless steel plate 9 gang white with wall box	EA	$474.78	$47.48	-	-
ES4-3	Grid & stainless steel plate 12 gang white with wall box	EA	$635.42	$63.54	-	-
ES6-2	Grid & stainless steel plate 12 gang white with wall box	EA	$750.21	$75.02	-	-
ES6-3WE	Grid & stainless steel plate 18 gang white with wall box	EA	$1,027.94	$102.79	-	-
ES9-2WE	Grid & stainless steel plate 18 gang white with wall box	EA	$917.14	$91.71	-	-
ES9-2BL	Grid & stainless steel plate 18 gang black with wall box	EA	$917.14	$91.71	-	-
ES12-2WE	Grid & stainless steel plate 24 gang white with wall box	EA	$1,084.04	$108.40	-	-
ES12-2BL	Grid & stainless steel plate 24 gang black with wall box	EA	$1,084.04	$108.40	-	-
ES15-2	Grid & stainless steel plate 30 gang white with wall box	EA	$1,214.89	$121.49	-	-
ES18-2	Grid & stainless steel plate 36 gang white with wall box	EA	$1,398.06	$139.81	-	-
ES21-2	Grid & stainless steel plate 42 gang white with wall box	EA	$1,505.47	$150.55	-	-
ES24-2	Grid & stainless steel plate 48 gang white with wall box	EA	$1,549.82	$154.98	-	-
	For Multi & Esco series					
MG670WE	Grid 1 gang white to suit Esco & Multi ranges plastic	EA	$9.14	$0.91	10	-
MG670BL	Grid 1 gang black to suit Esco & Multi ranges plastic	EA	$9.14	$0.91	10	-
MG672WE	Grid 2 gang white to suit Esco & Multi ranges plastic	EA	$9.14	$0.91	10	-
MG672BL	Grid 2 gang black to suit Esco & Multi ranges plastic	EA	$9.14	$0.91	10	-
MG673WE	Grid 3 gang white to suit Esco & Multi ranges plastic	EA	$9.88	$0.99	10	-
MG673BL	Grid 3 gang black to suit Esco & Multi ranges plastic	EA	$9.88	$0.99	10	-

N New product | ECO Energy Saving products | More info available. See technical pages | COMING SOON Coming soon | Product to be discontinued

Whilst most items are stock lines some products are made to order. UoM = Unit Of Measure.
Prices are effective 1 June 2017 and are subject to change without notice. Trade prices exclude GST.

Architectural Metal

Coverplates & installation accessories

MS788/2WE

MS788/4

Cat.Nos	Double powerpoint coverplates	UoM	Trade price $	GST $	Box qty	Carton qty
MS788/2WE	Coverplate 2 gang with wall box cat no 920 stainless steel	EA	$146.63	$14.66	-	-
MS788/2BL	Coverplate 2 gang with wall box cat no 920 stainless steel	EA	$146.63	$14.66	-	-
	4 gang powerpoint coverplates					
MS788/4	Coverplate 4 gang with wall box cat no 940 stainless steel	EA	$29.33	$27.06	-	-
	Inserts					
	for Multi & Esco range					
801/1WE	Insert for 2 gang multi series & Esco plates engravable white	EA	$1.79	$0.18	50	-
801/1BL	Insert for 2 gang multi series & Esco plates engravable black	EA	$1.79	$0.18	50	-
	Mounting bracket					
	For MS777LP series					
717/1	Mounting bracket for Architectural double powerpoint MS777	EA	$9.30	$0.93	-	-

N New product | ECO Energy Saving products | More info available. See technical pages | COMING SOON Coming soon | Product to be discontinued

Whilst most items are stock lines some products are made to order. UoM = Unit Of Measure.
Prices are effective 1 June 2017 and are subject to change without notice. Trade prices exclude GST.

Linea

Switches

LN770/1WE

LN770/2WE

LN770/3BL

LN770/6CR

LN400LWE

LN3FCWE

Cat.Nos	Vertical switches	UoM	Trade price $	GST $	Box qty	Carton qty
	Rocker switches - Single Pole Double Throw (SPDT)					
LN770/1WE	Switch 1 gang 2 way 240V a.c. white	EA	$10.41	$1.04	10	80
LN770/1BL	Switch 1 gang 2 way 240V a.c. black	EA	$10.85	$1.08	10	80
LN770/1CR	Switch 1 gang 2 way 240V a.c. cream	EA	$10.85	$1.08	10	80
LN770/2WE	Switch 2 gang 2 way 240V a.c. white	EA	$16.82	$1.68	10	80
LN770/2BL	Switch 2 gang 2 way 240V a.c. black	EA	$17.53	$1.75	10	80
LN770/2CR	Switch 2 gang 2 way 240V a.c. cream	EA	$17.53	$1.75	10	80
LN770/3WE	Switch 3 gang 2 way 240V a.c. white	EA	$30.40	$3.04	10	80
LN770/3BL	Switch 3 gang 2 way 240V a.c. black	EA	$30.40	$3.04	10	80
LN770/3CR	Switch 3 gang 2 way 240V a.c. cream	EA	$30.40	$3.04	10	80
LN770/4WE	Switch 4 gang 2 way 240V a.c. white	EA	$47.39	$4.74	10	80
LN770/4BL	Switch 4 gang 2 way 240V a.c. black	EA	$47.39	$4.74	10	80
LN770/4CR	Switch 4 gang 2 way 240V a.c. cream	EA	$47.39	$4.74	10	80
LN770/5WE	Switch 5 gang 2 way 240V a.c. white	EA	$66.96	$6.70	10	80
LN770/5BL	Switch 5 gang 2 way 240V a.c. black	EA	$66.96	$6.70	10	80
LN770/5CR	Switch 5 gang 2 way 240V a.c. cream	EA	$66.96	$6.70	10	80
LN770/6WE	Switch 6 gang 2 way 240V a.c. white	EA	$78.78	$7.88	10	80
LN770/6BL	Switch 6 gang 2 way 240V a.c. black	EA	$78.78	$7.88	10	80
LN770/6CR	Switch 6 gang 2 way 240V a.c. cream	EA	$78.78	$7.88	10	80
	Rotary dimmers					
LN400LWE	Rotary dimmer leading edge 2 wire 400VA 240V a.c. white	EA	$71.12	$7.11	9	72
LN400TWE	Rotary dimmer trailing edge 2 wire 400VA 240V a.c. white	EA	$83.83	$8.38	9	72
LN400TBL	Rotary dimmer trailing edge 2 wire 400VA 240V a.c. black	EA	$83.83	$8.38	9	72
LN400TCR	Rotary dimmer trailing edge 2 wire 400VA 240V a.c. cream	EA	$83.83	$8.38	9	72
	Push-button dimmers					
LN450PWE	Push-button dimmer universal 2 wire 450VA 240V a.c. white	EA	$100.92	$10.09	9	72
LN450PBL	Push-button dimmer universal 2 wire 450VA 240V a.c. black	EA	$100.92	$10.09	9	72
LN450PCR	Push-button dimmer universal 2 wire 450VA 240V a.c. cream	EA	$100.92	$10.09	9	72
	Fan controllers					
LN3FCWE	Fan controller 3 speed 100VA white	EA	$71.29	$7.13	9	72
LN3FCBL	Fan controller 3 speed 100VA black	EA	$71.29	$7.13	9	72
LN3FCCR	Fan controller 3 speed 100VA cream	EA	$71.29	$7.13	9	72

N New product | ECO Energy Saving products | More info available. See technical pages | COMING SOON Coming soon | Product to be discontinued

Whilst most items are stock lines some products are made to order. UoM = Unit Of Measure.
Prices are effective 1 June 2017 and are subject to change without notice. Trade prices exclude GST.

Linea

Switches

LN770/1HWE

LN770/3HWE

LN770/4HBL

LN770/6HCR

LN400LHWE

LN3FCHWE

Cat.Nos	Horizontal switches	UoM	Trade price $	GST $	Box qty	Carton qty
	Rocker switches - Single Pole Double Throw (SPDT)					
LN770/1HWE	Switch 1 gang 2 way 10A 240V a.c. white	EA	$10.41	$1.04	10	80
LN770/1HBL	Switch 1 gang 2 way 10A 240V a.c. black	EA	$10.85	$1.08	10	80
LN770/1HCR	Switch 1 gang 2 way 10A 240V a.c. cream	EA	$10.85	$1.08	10	80
LN770/2HWE	Switch 2 gang 2 way 10A 240V a.c. white	EA	$16.82	$1.68	10	80
LN770/2HBL	Switch 2 gang 2 way 10A 240V a.c. black	EA	$17.53	$1.75	10	80
LN770/2HCR	Switch 2 gang 2 way 10A 240V a.c. cream	EA	$17.53	$1.75	10	80
LN770/3HWE	Switch 3 gang 2 way 10A 240V a.c. white	EA	$30.40	$3.04	10	80
LN770/3HBL	Switch 3 gang 2 way 10A 240V a.c. black	EA	$30.40	$3.04	10	80
LN770/3HCR	Switch 3 gang 2 way 10A 240V a.c. cream	EA	$30.40	$3.04	10	80
LN770/4HWE	Switch 4 gang 2 way 10A 240V a.c. white	EA	$47.39	$4.74	10	80
LN770/4HBL	Switch 4 gang 2 way 10A 240V a.c. black	EA	$47.39	$4.74	10	80
LN770/4HCR	Switch 4 gang 2 way 10A 240V a.c. cream	EA	$47.39	$4.74	10	80
LN770/5HWE	Switch 5 gang 2 way 10A 240V a.c. white	EA	$66.96	$6.70	10	80
LN770/5HBL	Switch 5 gang 2 way 10A 240V a.c. black	EA	$66.96	$6.70	10	80
LN770/5HCR	Switch 5 gang 2 way 10A 240V a.c. cream	EA	$66.96	$6.70	10	80
LN770/6HWE	Switch 6 gang 2 way 10A 240V a.c. white	EA	$78.78	$7.88	10	80
LN770/6HBL	Switch 6 gang 2 way 10A 240V a.c. black	EA	$78.78	$7.88	10	80
LN770/6HCR	Switch 6 gang 2 way 10A 240V a.c. cream	EA	$78.78	$7.88	10	80
	Rotary dimmers					
LN400LHWE	Rotary dimmer leading edge 2 wire 400VA 240V a.c. white (ECO)	EA	$71.12	$7.11	9	72
LN400LHCR	Rotary dimmer leading edge 2 wire 400VA 240V a.c. cream (ECO)	EA	$71.12	$7.11	9	72
LN400THWE	Rotary dimmer trailing edge 2 wire 400VA 240V a.c. white (ECO)	EA	$83.83	$8.38	9	72
LN400THBL	Rotary dimmer trailing edge 2 wire 400VA 240V a.c. black (ECO)	EA	$83.83	$8.38	9	72
LN400THCR	Rotary dimmer trailing edge 2 wire 400VA 240V a.c. cream (ECO)	EA	$83.83	$8.38	9	72
	Fan controllers					
LN3FCHWE	Fan controller 3 speed 100VA white	EA	$71.29	$7.13	9	72
LN3FCHBL	Fan controller 3 speed 100VA black	EA	$71.29	$7.13	9	72
LN3FCHCR	Fan controller 3 speed 100VA cream	EA	$71.29	$7.13	9	72

N New product | ECO Energy Saving products | More info available. See technical pages | COMING SOON Coming soon | Product to be discontinued

Whilst most items are stock lines some products are made to order. UoM = Unit Of Measure.
Prices are effective 1 June 2017 and are subject to change without notice. Trade prices exclude GST.

Linea

Switches

LNA770/1WE

LNA770/1CR

LNA770/2BL

Cat.Nos	Architrave	UoM	Trade price $	GST $	Box qty	Carton qty
	Rocker switches - Single Pole Double Throw (SPDT)					
LNA770/1WE	Architrave switch 1 gang 2 way 10A 240V a.c. white	EA	$9.95	$1.00	10	120
LNA770/1BL	Architrave switch 1 gang 2 way 10A 240V a.c. black	EA	$12.04	$1.20	10	120
LNA770/1CR	Architrave switch 1 gang 2 way 10A 240V a.c. cream	EA	$12.04	$1.20	10	120
LNA770/2WE	Architrave switch 2 gang 2 way 10A 240V a.c. white	EA	$25.91	$2.59	10	120
LNA770/2BL	Architrave switch 2 gang 2 way 10A 240V a.c. black	EA	$28.00	$2.80	10	120
LNA770/2CR	Architrave switch 2 gang 2 way 10A 240V a.c. cream	EA	$28.00	$2.80	10	120

Linea

Powerpoints

LN787WE

LN787XBL

LN787/15WE

LN777WE

LN777ABL

LN777ESWEWE

Cat.Nos	Horizontal powerpoints	UoM	Trade price $	GST $	Box qty	Carton qty
	Single powerpoints					
LN787WE	Powerpoint 1 gang 10A 240V a.c. white	EA	$13.83	$1.38	10	120
LN787BL	Powerpoint 1 gang 10A 240V a.c. black	EA	$14.41	$1.44	10	120
LN787CR	Powerpoint 1 gang 10A 240V a.c. cream	EA	$14.41	$1.44	10	120
LN787XWE	Powerpoint 1 gang 10A 240V a.c. with extra switch white	EA	$31.66	$3.17	10	120
LN787XBL	Powerpoint 1 gang 10A 240V a.c. with extra switch black	EA	$31.66	$3.17	10	120
LN787XCR	Powerpoint 1 gang 10A 240V a.c. with extra switch cream	EA	$31.66	$3.17	10	120
LN787/15WE	Powerpoint 1 gang 15A 240V a.c. white	EA	$30.48	$3.05	10	120
LN787/15BL	Powerpoint 1 gang 15A 240V a.c. black	EA	$26.75	$2.68	10	120
LN787/15CR	Powerpoint 1 gang 15A 240V a.c. cream	EA	$33.78	$3.38	10	120
	Double powerpoints					
LN777WE	Powerpoint 2 gang 10A 240V a.c. white	EA	$13.83	$1.38	10	120
LN777BL	Powerpoint 2 gang 10A 240V a.c. black	EA	$14.41	$1.44	10	120
LN777CR	Powerpoint 2 gang 10A 240V a.c. cream	EA	$14.41	$1.44	10	120
LN777XWE	Powerpoint 2 gang 10A 240V a.c. with extra switch white	EA	$31.66	$3.17	10	120
LN777XBL	Powerpoint 2 gang 10A 240V a.c. with extra switch black	EA	$31.66	$3.17	10	120
LN777XCR	Powerpoint 2 gang 10A 240V a.c. with extra switch cream	EA	$31.66	$3.17	10	120
LN777AWE	Powerpoint 2 gang 10A 240V a.c. autoswitch white	EA	$30.48	$3.05	10	120
LN777ABL	Powerpoint 2 gang 10A 240V a.c. autoswitch black	EA	$26.75	$2.68	10	120
LN777ACR	Powerpoint 2 gang 10A 240V a.c. autoswitch cream	EA	$33.78	$3.38	10	120
LN777ESWEWE	Powerpoint 2 gang 10A 240V a.c. with extra safety white	EA	$28.49	$2.85	10	120
LN777ESBLBL	Powerpoint 2 gang 10A 240V a.c. with extra safety black	EA	$28.49	$2.85	10	120
LN777ESWEGY	Powerpoint 2 gang 10A 240V a.c. with extra safety white/grey	EA	$29.61	$2.96	10	120
LN777ESBLGY	Powerpoint 2 gang 10A 240V a.c. with extra safety black/grey	EA	$29.61	$2.96	10	120
LN777AESWEWE	Powerpoint 2 gang 10A 240V a.c. autoswitch with extra safety white	EA	$28.49	$2.85	10	120
LN777AESBLBL	Powerpoint 2 gang 10A 240V a.c. autoswitch with extra safety black	EA	$28.49	$2.85	10	120
LN777AESWEGY	Powerpoint 2 gang 10A 240V a.c. autoswitch with extra safety white/grey	EA	$28.49	$2.85	10	120
LN777AESBLGY	Powerpoint 2 gang 10A 240V a.c. autoswitch with extra safety black/grey	EA	$28.49	$2.85	10	120

N New product | ECO Energy Saving products | More info available. See technical pages | COMING SOON Coming soon | Product to be discontinued

Whilst most items are stock lines some products are made to order. UoM = Unit Of Measure.
Prices are effective 1 June 2017 and are subject to change without notice. Trade prices exclude GST.

Linea

Phone, TV, data and AV sockets

LN770/1CXWE

LN770/2CX/FCXWE

LN770/1RJ1WE

LN770/1RJ2EWE

LN770/2RJ2EWE

Cat.Nos	TV outlets	UoM	Trade price $	GST $	Box qty	Carton qty
LN770/1CXWE	TV outlet coaxial 1 gang 75 Ohm white	EA	$10.56	$1.06	10	160
LN770/1CXBL	TV outlet coaxial 1 gang 75 Ohm black	EA	$10.56	$1.06	10	160
LN770/1FCXWE	TV outlet PAL F-type 1 gang 75 Ohm white	EA	$11.61	$1.16	10	160
LN770/2CX/FCXWE	TV outlet coaxial & PAL F-type 2 gang 75 Ohm white	EA	$22.14	$2.21	10	160
	Phone outlets					
LN770/1RJ1WE	Phone outlet RJ12 1 gang white	EA	$23.53	$2.35	10	160
LN770/1RJ1BL	Phone outlet RJ12 1 gang black	EA	$23.53	$2.35	10	160
LN770/1RJ1CR	Phone outlet RJ12 1 gang cream	EA	$23.53	$2.35	10	160
LN770/2RJ1WE	Phone outlet RJ12 2 gang white	EA	$40.20	$4.02	10	160
LN770/2RJ1BL	Phone outlet RJ12 2 gang black	EA	$35.18	$3.52	10	160
LN770/2RJ1CR	Phone outlet RJ12 2 gang cream	EA	$44.99	$4.50	10	160
	RJ45 outlets					
LN770/1RJ2EWE	Data outlet RJ45 1 gang Cat5e white	EA	$26.22	$2.62	10	160
LN770/1RJ2EBL	Data outlet RJ45 1 gang Cat5e black	EA	$22.89	$2.29	10	160
LN770/1RJ2ECR	Data outlet RJ45 1 gang Cat5e cream	EA	$26.91	$2.69	10	160
LN770/2RJ2EWE	Data outlet RJ45 2 gang Cat5e white	EA	$42.15	$4.22	10	160
LN770/2RJ2EBL	Data outlet RJ45 2 gang Cat5e black	EA	$38.73	$3.87	10	160
LN770/2RJ2ECR	Data outlet RJ45 2 gang Cat5e cream	EA	$45.85	$4.58	10	160

N New product | ECO Energy Saving products | More info available. See technical pages | COMING SOON Coming soon | Product to be discontinued

Whilst most items are stock lines some products are made to order. UoM = Unit Of Measure.
Prices are effective 1 June 2017 and are subject to change without notice. Trade prices exclude GST.

Linea

Grid & plates

LN770/1GPLWE

LN770/2GPLBL

LN770/4GPLBL

LN770/5GPLCR

LN770/6GPLWE

LN770/0GPLWE

Cat.Nos	Grid & plates only	UoM	Trade price $	GST $	Box qty	Carton qty
LN770/1GPLWE	Grid & plate 1 gang white	EA	$6.54	$0.65	10	160
LN770/1GPLBL	Grid & plate 1 gang black	EA	$6.54	$0.65	10	160
LN770/1GPLCR	Grid & plate 1 gang cream	EA	$6.54	$0.65	10	160
LN770/2GPLWE	Grid & plate 2 gang white	EA	$7.09	$0.71	10	160
LN770/2GPLBL	Grid & plate 2 gang black	EA	$7.37	$0.74	10	160
LN770/2GPLCR	Grid & plate 2 gang cream	EA	$7.09	$0.71	10	160
LN770/3GPLWE	Grid & plate 3 gang white	EA	$7.76	$0.78	10	160
LN770/3GPLBL	Grid & plate 3 gang black	EA	$7.76	$0.78	10	160
LN770/3GPLCR	Grid & plate 3 gang cream	EA	$7.76	$0.78	10	160
LN770/4GPLWE	Grid & plate 4 gang white	EA	$12.56	$1.26	10	160
LN770/4GPLBL	Grid & plate 4 gang black	EA	$12.56	$1.26	10	160
LN770/4GPLCR	Grid & plate 4 gang cream	EA	$12.56	$1.26	10	160
LN770/5GPLWE	Grid & plate 5 gang white	EA	$13.96	$1.40	10	160
LN770/5GPLBL	Grid & plate 5 gang black	EA	$13.96	$1.40	10	160
LN770/5GPLCR	Grid & plate 5 gang cream	EA	$13.96	$1.40	10	160
LN770/6GPLWE	Grid & plate 6 gang white	EA	$13.96	$1.40	10	160
LN770/6GPLBL	Grid & plate 6 gang black	EA	$13.96	$1.40	10	160
LN770/6GPLCR	Grid & plate 6 gang cream	EA	$13.96	$1.40	10	160
LN770/0GPLWE	Grid & plate blank white	EA	$7.18	$0.72	10	160
LN770/0GPLBL	Grid & plate blank black	EA	$7.18	$0.72	10	160
LN770/0GPLCR	Grid & plate blank cream	EA	$7.18	$0.72	10	160

Linea

Coverplates

LN770/1PLMS

LN770/1PLAS

LN770/1PLVA

LN770/2PLKH

LN770/2PLYE

LN770/2PLOG

Cat.Nos	Coverplates – 1 gang	UoM	Trade price $	GST $	Box qty	Carton qty
LN770/1PLWE	Coverplate 1 gang white	EA	$3.50	$0.35	10	200
LN770/1PLBL	Coverplate 1 gang black	EA	$3.50	$0.35	10	200
LN770/1PLCR	Coverplate 1 gang cream	EA	$3.50	$0.35	10	200
LN770/1PLMS	Coverplate 1 gang matt silver	EA	$7.91	$0.79	10	200
LN770/1PLAS	Coverplate 1 gang asphalt	EA	$7.91	$0.79	10	200
LN770/1PLGL	Coverplate 1 gang gun metal	EA	$7.91	$0.79	10	200
LN770/1PLVA	Coverplate 1 gang runaway bride	EA	$9.97	$1.00	10	200
LN770/1PLLG	Coverplate 1 gang ghost gum	EA	$9.97	$1.00	10	200
LN770/1PLOL	Coverplate 1 gang 5 o'clock olive	EA	$9.97	$1.00	10	200
LN770/1PLKH	Coverplate 1 gang ninja khaki	EA	$9.97	$1.00	10	200
LN770/1PLDG	Coverplate 1 gang wet elephant	EA	$9.97	$1.00	10	200
LN770/1PLMI	Coverplate 1 gang midnight dash	EA	$9.97	$1.00	10	200
LN770/1PLYE	Coverplate 1 gang sunshine	EA	$9.97	$1.00	10	200
LN770/1PLOG	Coverplate 1 gang orange crush	EA	$9.97	$1.00	10	200
LN770/1PLPI	Coverplate 1 gang bubblegum	EA	$9.97	$1.00	10	200
LN770/1PLRE	Coverplate 1 gang saucy red	EA	$9.97	$1.00	10	200
LN770/1PLSB	Coverplate 1 gang cheeky boy blue	EA	$9.97	$1.00	10	200
LN770/1PLAU	Coverplate 1 gang abracadabra	EA	$9.97	$1.00	10	200
	Coverplates – 2 gang					
LN770/2PLWE	Coverplate 2 gang white	EA	$3.50	$0.35	10	200
LN770/2PLBL	Coverplate 2 gang black	EA	$3.50	$0.35	40	200
LN770/2PLCR	Coverplate 2 gang cream	EA	$3.50	$0.35	40	200
LN770/2PLMS	Coverplate 2 gang matt silver	EA	$7.91	$0.79	10	200
LN770/2PLAS	Coverplate 2 gang asphalt	EA	$7.91	$0.79	10	200
LN770/2PLGL	Coverplate 2 gang gun metal	EA	$7.91	$0.79	10	200
LN770/2PLVA	Coverplate 2 gang runaway bride	EA	$9.97	$1.00	10	200
LN770/2PLLG	Coverplate 2 gang ghost gum	EA	$9.97	$1.00	10	200
LN770/2PLOL	Coverplate 2 gang 5 o'clock olive	EA	$9.97	$1.00	10	200
LN770/2PLKH	Coverplate 2 gang ninja khaki	EA	$9.97	$1.00	10	200
LN770/2PLDG	Coverplate 2 gang wet elephant	EA	$9.97	$1.00	10	200
LN770/2PLMI	Coverplate 2 gang midnight dash	EA	$9.97	$1.00	10	200
LN770/2PLYE	Coverplate 2 gang sunshine	EA	$9.97	$1.00	10	200
LN770/2PLOG	Coverplate 2 gang orange crush	EA	$9.97	$1.00	10	200
LN770/2PLPI	Coverplate 2 gang bubblegum	EA	$9.97	$1.00	10	200

N New product | ECO Energy Saving products | More info available. See technical pages | COMING SOON Coming soon | Product to be discontinued

Whilst most items are stock lines some products are made to order. UoM = Unit Of Measure.
Prices are effective 1 June 2017 and are subject to change without notice. Trade prices exclude GST.

Linea

Coverplates

LN770/3PLLG

LN770/3PLMI

LN770/3PLPI

LN770/3PLSB

LN770/4PLOL

LN770/4PLDG

Cat.Nos	Coverplates – 2 gang	UoM	Trade price $	GST $	Box qty	Carton qty
LN770/2PLRE	Coverplate 2 gang saucy red	EA	$9.97	$1.00	10	200
LN770/2PLSB	Coverplate 2 gang cheeky boy blue	EA	$9.97	$1.00	10	200
LN770/2PLAU	Coverplate 2 gang abracadabra	EA	$9.97	$1.00	10	200
	Coverplates – 3 gang					
LN770/3PLWE	Coverplate 3 gang white	EA	$3.50	$0.35	40	200
LN770/3PLBL	Coverplate 3 gang black	EA	$3.50	$0.35	40	200
LN770/3PLCR	Coverplate 3 gang cream	EA	$3.50	$0.35	40	200
LN770/3PLMS	Coverplate 3 gang matt silver	EA	$7.91	$0.79	10	200
LN770/3PLAS	Coverplate 3 gang asphalt	EA	$7.91	$0.79	10	200
LN770/3PLGL	Coverplate 3 gang gun metal	EA	$7.91	$0.79	10	200
LN770/3PLVA	Coverplate 3 gang runaway bride	EA	$9.97	$1.00	10	200
LN770/3PLLG	Coverplate 3 gang ghost gum	EA	$9.97	$1.00	10	200
LN770/3PLOL	Coverplate 3 gang 5 o'clock olive	EA	$9.97	$1.00	10	200
LN770/3PLKH	Coverplate 3 gang ninja khaki	EA	$9.97	$1.00	10	200
LN770/3PLDG	Coverplate 3 gang wet elephant	EA	$9.97	$1.00	10	200
LN770/3PLMI	Coverplate 3 gang midnight dash	EA	$9.97	$1.00	10	200
LN770/3PLYE	Coverplate 3 gang sunshine	EA	$9.97	$1.00	10	200
LN770/3PLOG	Coverplate 3 gang orange crush	EA	$9.97	$1.00	10	200
LN770/3PLPI	Coverplate 3 gang bubblegum	EA	$9.97	$1.00	10	200
LN770/3PLRE	Coverplate 3 gang saucy red	EA	$9.97	$1.00	10	200
LN770/3PLSB	Coverplate 3 gang cheeky boy blue	EA	$9.97	$1.00	10	200
LN770/3PLAU	Coverplate 3 gang abracadabra	EA	$9.97	$1.00	10	200
	Coverplates – 4 gang					
LN770/4PLWE	Coverplate 4 gang white	EA	$3.50	$0.35	40	200
LN770/4PLBL	Coverplate 4 gang black	EA	$3.50	$0.35	40	200
LN770/4PLCR	Coverplate 4 gang cream	EA	$3.50	$0.35	40	200
LN770/4PLMS	Coverplate 4 gang matt silver	EA	$7.91	$0.79	10	200
LN770/4PLAS	Coverplate 4 gang asphalt	EA	$7.91	$0.79	10	200
LN770/4PLGL	Coverplate 4 gang gun metal	EA	$7.91	$0.79	10	200
LN770/4PLVA	Coverplate 4 gang runaway bride	EA	$9.97	$1.00	10	200
LN770/4PLLG	Coverplate 4 gang ghost gum	EA	$9.97	$1.00	10	200
LN770/4PLOL	Coverplate 4 gang 5 o'clock olive	EA	$9.97	$1.00	10	200
LN770/4PLKH	Coverplate 4 gang ninja khaki	EA	$9.97	$1.00	10	200
LN770/4PLDG	Coverplate 4 gang wet elephant	EA	$9.97	$1.00	10	200

N New product | ECO Energy Saving products | More info available. See technical pages | COMING SOON Coming soon | Product to be discontinued

Whilst most items are stock lines some products are made to order. UoM = Unit Of Measure.
Prices are effective 1 June 2017 and are subject to change without notice. Trade prices exclude GST.

Linea

Coverplates

LN770/5PLWE

LN770/5PLMS

LN770/5PLAS

LN770/5PLGL

LN770/5PLVA

LN770/5PLLG

Cat.Nos	Coverplates – 4 gang	UoM	Trade price $	GST $	Box qty	Carton qty
LN770/4PLMI	Coverplate 4 gang midnight dash	EA	$9.97	$1.00	10	200
LN770/4PLYE	Coverplate 4 gang sunshine	EA	$9.97	$1.00	10	200
LN770/4PLOG	Coverplate 4 gang orange crush	EA	$9.97	$1.00	10	200
LN770/4PLPI	Coverplate 4 gang bubblegum	EA	$9.97	$1.00	10	200
LN770/4PLRE	Coverplate 4 gang saucy red	EA	$9.97	$1.00	10	200
LN770/4PLSB	Coverplate 4 gang cheeky boy blue	EA	$9.97	$1.00	10	200
LN770/4PLAU	Coverplate 4 gang abracadabra	EA	$9.97	$1.00	10	200
	Coverplates – 5 gang					
LN770/5PLWE	Coverplate 5 gang white	EA	$3.50	$0.35	40	200
LN770/5PLBL	Coverplate 5 gang black	EA	$3.50	$0.35	40	200
LN770/5PLCR	Coverplate 5 gang cream	EA	$3.50	$0.35	40	200
LN770/5PLMS	Coverplate 5 gang matt silver	EA	$7.91	$0.79	10	200
LN770/5PLAS	Coverplate 5 gang asphalt	EA	$7.91	$0.79	10	200
LN770/5PLGL	Coverplate 5 gang gun metal	EA	$7.91	$0.79	10	200
LN770/5PLVA	Coverplate 5 gang runaway bride	EA	$9.97	$1.00	10	200
LN770/5PLLG	Coverplate 5 gang ghost gum	EA	$9.97	$1.00	10	200
LN770/5PLOL	Coverplate 5 gang 5 o'clock olive	EA	$9.97	$1.00	10	200
LN770/5PLKH	Coverplate 5 gang ninja khaki	EA	$9.97	$1.00	10	200
LN770/5PLDG	Coverplate 5 gang wet elephant	EA	$9.97	$1.00	10	200
LN770/5PLMI	Coverplate 5 gang midnight dash	EA	$9.97	$1.00	10	200
LN770/5PLYE	Coverplate 5 gang sunshine	EA	$9.97	$1.00	10	200
LN770/5PLOG	Coverplate 5 gang orange crush	EA	$9.97	$1.00	10	200
LN770/5PLPI	Coverplate 5 gang bubblegum	EA	$9.97	$1.00	10	200
LN770/5PLRE	Coverplate 5 gang saucy red	EA	$9.97	$1.00	10	200
LN770/5PLSB	Coverplate 5 gang cheeky boy blue	EA	$9.97	$1.00	10	200
LN770/5PLAU	Coverplate 5 gang abracadabra	EA	$9.97	$1.00	10	200
	Coverplates – 6 gang					
LN770/6PLWE	Coverplate 6 gang white	EA	$3.50	$0.35	40	200
LN770/6PLBL	Coverplate 6 gang black	EA	$3.50	$0.35	40	200
LN770/6PLCR	Coverplate 6 gang cream	EA	$3.50	$0.35	40	200
LN770/6PLMS	Coverplate 6 gang matt silver	EA	$7.91	$0.79	10	200
LN770/6PLAS	Coverplate 6 gang asphalt	EA	$7.91	$0.79	10	200
LN770/6PLGL	Coverplate 6 gang gun metal	EA	$7.91	$0.79	10	200

N New product | ECO Energy Saving products | More info available. See technical pages | COMING SOON Coming soon | Product to be discontinued

Whilst most items are stock lines some products are made to order. UoM = Unit Of Measure.
Prices are effective 1 June 2017 and are subject to change without notice. Trade prices exclude GST.

Linea

Coverplates

LN770/6PLDG

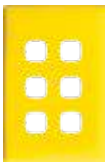
LN770/6PLYE

LN770/6PLOG

LN770/6PLRE

LN770/6PLAU

LN770/0PLAS

Cat.Nos	Coverplates – 6 gang	UoM	Trade price $	GST $	Box qty	Carton qty
LN770/6PLVA	Coverplate 6 gang runaway bride	EA	$9.97	$1.00	10	200
LN770/6PLLG	Coverplate 6 gang ghost gum	EA	$9.97	$1.00	10	200
LN770/6PLOL	Coverplate 6 gang 5 o'clock olive	EA	$9.97	$1.00	10	200
LN770/6PLKH	Coverplate 6 gang ninja khaki	EA	$9.97	$1.00	10	200
LN770/6PLDG	Coverplate 6 gang wet elephant	EA	$9.97	$1.00	10	200
LN770/6PLMI	Coverplate 6 gang midnight dash	EA	$9.97	$1.00	10	200
LN770/6PLYE	Coverplate 6 gang sunshine	EA	$9.97	$1.00	10	200
LN770/6PLOG	Coverplate 6 gang orange crush	EA	$9.97	$1.00	10	200
LN770/6PLPI	Coverplate 6 gang bubblegum	EA	$9.97	$1.00	10	200
LN770/6PLRE	Coverplate 6 gang saucy red	EA	$9.97	$1.00	10	200
LN770/6PLSB	Coverplate 6 gang cheeky boy blue	EA	$9.97	$1.00	10	200
LN770/6PLAU	Coverplate 6 gang abracadabra	EA	$9.97	$1.00	10	200
	Coverplates – blank					
LN770/0PLWE	Blank Coverplate white	EA	$3.50	$0.35	10	200
LN770/0PLBL	Blank Coverplate black	EA	$3.50	$0.35	40	200
LN770/0PLCR	Blank Coverplate cream	EA	$3.50	$0.35	40	200
LN770/0PLMS	Blank Coverplate matt silver	EA	$7.91	$0.79	10	200
LN770/0PLAS	Blank Coverplate asphalt	EA	$7.91	$0.79	10	200
LN770/0PLGL	Blank Coverplate gun metal	EA	$7.91	$0.79	10	200
LN770/0PLVA	Blank Coverplate runaway bride	EA	$9.97	$1.00	10	200
LN770/0PLLG	Blank Coverplate ghost gum	EA	$9.97	$1.00	10	200
LN770/0PLOL	Blank Coverplate 5 o'clock olive	EA	$9.97	$1.00	10	200
LN770/0PLKH	Blank Coverplate ninja khaki	EA	$9.97	$1.00	10	200
LN770/0PLDG	Blank Coverplate wet elephant	EA	$9.97	$1.00	10	200
LN770/0PLMI	Blank Coverplate midnight dash	EA	$9.97	$1.00	10	200
LN770/0PLYE	Blank Coverplate sunshine	EA	$9.97	$1.00	10	200
LN770/0PLOG	Blank Coverplate orange crush	EA	$9.97	$1.00	10	200
LN770/0PLPI	Blank Coverplate bubblegum	EA	$9.97	$1.00	10	200
LN770/0PLRE	Blank Coverplate saucy red	EA	$9.97	$1.00	10	200
LN770/0PLSB	Blank Coverplate cheeky boy blue	EA	$9.97	$1.00	10	200
LN770/0PLAU	Blank Coverplate abracadabra	EA	$9.97	$1.00	10	200

N New product | ECO Energy Saving products | More info available. See technical pages | COMING SOON Coming soon | Product to be discontinued

Whilst most items are stock lines some products are made to order. UoM = Unit Of Measure.
Prices are effective 1 June 2017 and are subject to change without notice. Trade prices exclude GST.

Linea

Coverplates

LNA770/1PLWE

LNA770/1PLMS

LNA770/1PLMI

LNA770/2PLCR

LNA770/2PLDG

LNA770/2PLRE

Cat.Nos	Architrave coverplates – 1 gang	UoM	Trade price $	GST $	Box qty	Carton qty
LNA770/1PLWE	Architrave coverplate 1 gang white	EA	$3.02	$0.30	10	200
LNA770/1PLBL	Architrave coverplate 1 gang black	EA	$3.02	$0.30	10	200
LNA770/1PLCR	Architrave coverplate 1 gang cream	EA	$3.02	$0.30	10	200
LNA770/1PLMS	Architrave coverplate 1 gang matt silver	EA	$7.91	$0.79	10	200
LNA770/1PLAS	Architrave coverplate 1 gang asphalt	EA	$7.91	$0.79	10	200
LNA770/1PLGL	Architrave coverplate 1 gang gun metal	EA	$7.91	$0.79	10	200
LNA770/1PLVA	Architrave coverplate 1 gang runaway bride	EA	$9.97	$1.00	10	200
LNA770/1PLLG	Architrave coverplate 1 gang ghost gum	EA	$9.97	$1.00	10	200
LNA770/1PLOL	Architrave coverplate 1 gang 5 o'clock olive	EA	$9.97	$1.00	10	200
LNA770/1PLKH	Architrave coverplate 1 gang ninja khaki	EA	$9.97	$1.00	10	200
LNA770/1PLDG	Architrave coverplate 1 gang wet elephant	EA	$9.97	$1.00	10	200
LNA770/1PLMI	Architrave coverplate 1 gang midnight dash	EA	$9.97	$1.00	10	200
LNA770/1PLYE	Architrave coverplate 1 gang sunshine	EA	$9.97	$1.00	10	200
LNA770/1PLOG	Architrave coverplate 1 gang orange crush	EA	$9.97	$1.00	10	200
LNA770/1PLPI	Architrave coverplate 1 gang bubblegum	EA	$9.97	$1.00	10	200
LNA770/1PLRE	Architrave coverplate 1 gang saucy red	EA	$9.97	$1.00	10	200
LNA770/1PLSB	Architrave coverplate 1 gang cheeky boy blue	EA	$9.97	$1.00	10	200
LNA770/1PLAU	Architrave coverplate 1 gang abracadabra	EA	$9.97	$1.00	10	200
	Architrave coverplates – 2 gang					
LNA770/2PLWE	Architrave coverplate 2 gang white	EA	$3.02	$0.30	10	200
LNA770/2PLBL	Architrave coverplate 2 gang black	EA	$3.02	$0.30	10	200
LNA770/2PLCR	Architrave coverplate 2 gang cream	EA	$3.02	$0.30	10	200
LNA770/2PLMS	Architrave coverplate 2 gang matt silver	EA	$7.91	$0.79	10	200
LNA770/2PLAS	Architrave coverplate 2 gang asphalt	EA	$7.91	$0.79	10	200
LNA770/2PLGL	Architrave coverplate 2 gang gun metal	EA	$7.91	$0.79	10	200
LNA770/2PLLG	Architrave coverplate 2 gang ghost gum	EA	$9.97	$1.00	10	200
LNA770/2PLOL	Architrave coverplate 2 gang 5 o'clock olive	EA	$9.97	$1.00	10	200
LNA770/2PLDG	Architrave coverplate 2 gang wet elephant	EA	$9.97	$1.00	10	200
LNA770/2PLMI	Architrave coverplate 2 gang midnight dash	EA	$9.97	$1.00	10	200
LNA770/2PLRE	Architrave coverplate 2 gang saucy red	EA	$9.97	$1.00	10	200
LNA770/2PLSB	Architrave coverplate 2 gang cheeky boy blue	EA	$9.97	$1.00	10	200

N New product | ECO Energy Saving products | More info available. See technical pages | COMING SOON Coming soon | Product to be discontinued

Whilst most items are stock lines some products are made to order. UoM = Unit Of Measure.
Prices are effective 1 June 2017 and are subject to change without notice. Trade prices exclude GST.

Linea

Coverplates

LN787PLWE

LN787PLOL

LN787PLOG

LN787XPLAS

LN787XPLKH

LN787XPLYE

Cat.Nos	Coverplates for single powerpoints	UoM	Trade price $	GST $	Box qty	Carton qty
LN787PLWE	Powerpoint coverplate 1 gang white	EA	$3.50	$0.35	40	200
LN787PLBL	Powerpoint coverplate 1 gang black	EA	$3.50	$0.35	40	200
LN787PLCR	Powerpoint coverplate 1 gang cream	EA	$3.50	$0.35	40	200
LN787PLMS	Powerpoint coverplate 1 gang matt silver	EA	$7.91	$0.79	10	200
LN787PLAS	Powerpoint coverplate 1 gang asphalt	EA	$7.91	$0.79	10	200
LN787PLGL	Powerpoint coverplate 1 gang gun metal	EA	$7.91	$0.79	10	200
LN787PLVA	Powerpoint coverplate 1 gang runaway bride	EA	$9.97	$1.00	10	200
LN787PLLG	Powerpoint coverplate 1 gang ghost gum	EA	$9.97	$1.00	10	200
LN787PLOL	Powerpoint coverplate 1 gang 5 o'clock olive	EA	$9.97	$1.00	10	200
LN787PLKH	Powerpoint coverplate 1 gang ninja khaki	EA	$9.97	$1.00	10	200
LN787PLDG	Powerpoint coverplate 1 gang wet elephant	EA	$9.97	$1.00	10	200
LN787PLMI	Powerpoint coverplate 1 gang midnight dash	EA	$9.97	$1.00	10	200
LN787PLYE	Powerpoint coverplate 1 gang sunshine	EA	$9.97	$1.00	10	200
LN787PLOG	Powerpoint coverplate 1 gang orange crush	EA	$9.97	$1.00	10	200
LN787PLPI	Powerpoint coverplate 1 gang bubblegum	EA	$9.97	$1.00	10	200
LN787PLRE	Powerpoint coverplate 1 gang saucy red	EA	$9.97	$1.00	10	200
LN787PLSB	Powerpoint coverplate 1 gang cheeky boy blue	EA	$9.97	$1.00	10	200
LN787PLAU	Powerpoint coverplate 1 gang abracadabra	EA	$9.97	$1.00	10	200
	Coverplates for single powerpoint with extra hole					
LN787XPLWE	Powerpoint coverplate 1 gang with extra hole white	EA	$3.50	$0.35	40	200
LN787XPLBL	Powerpoint coverplate 1 gang with extra hole black	EA	$3.50	$0.35	40	200
LN787XPLCR	Powerpoint coverplate 1 gang with extra hole cream	EA	$3.50	$0.35	40	200
LN787XPLMS	Powerpoint coverplate 1 gang with extra hole matt silver	EA	$7.91	$0.79	10	200
LN787XPLAS	Powerpoint coverplate 1 gang with extra hole asphalt	EA	$7.91	$0.79	10	200
LN787XPLGL	Powerpoint coverplate 1 gang with extra hole gun metal	EA	$7.91	$0.79	10	200
LN787XPLVA	Powerpoint coverplate 1 gang with extra hole runaway bride	EA	$9.97	$1.00	10	200
LN787XPLKH	Powerpoint coverplate 1 gang with extra hole ninja khaki	EA	$9.97	$1.00	10	200
LN787XPLDG	Powerpoint coverplate 1 gang with extra hole wet elephant	EA	$9.97	$1.00	10	200
LN787XPLMI	Powerpoint coverplate 1 gang with extra hole midnight dash	EA	$9.97	$1.00	10	200
LN787XPLPI	Powerpoint coverplate 1 gang with extra hole bubblegum	EA	$9.97	$1.00	10	200
LN787XPLAU	Powerpoint coverplate 1 gang with extra hole abracadabra	EA	$9.97	$1.00	10	200

N New product | ECO Energy Saving products | More info available. See technical pages | COMING SOON Coming soon | Product to be discontinued

Whilst most items are stock lines some products are made to order. UoM = Unit Of Measure.
Prices are effective 1 June 2017 and are subject to change without notice. Trade prices exclude GST.

Linea

Coverplates

LN777PLWE

LN777PLAS

LN777PLOL

LN777PLBL

LN777XPLVA

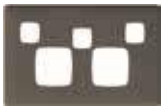
LN777XPLDG

Cat.Nos	Coverplates for double powerpoints	UoM	Trade price $	GST $	Box qty	Carton qty
LN777PLWE	Powerpoint coverplate 2 gang white	EA	$3.50	$0.35	10	200
LN777PLBL	Powerpoint coverplate 2 gang black	EA	$3.50	$0.35	40	200
LN777PLCR	Powerpoint coverplate 2 gang cream	EA	$3.50	$0.35	40	200
LN777PLMS	Powerpoint coverplate 2 gang matt silver	EA	$7.91	$0.79	10	200
LN777PLAS	Powerpoint coverplate 2 gang asphalt	EA	$7.91	$0.79	10	200
LN777PLGL	Powerpoint coverplate 2 gang gun metal	EA	$7.91	$0.79	10	200
LN777PLVA	Powerpoint coverplate 2 gang runaway bride	EA	$9.97	$1.00	10	200
LN777PLLG	Powerpoint coverplate 2 gang ghost gum	EA	$9.97	$1.00	10	200
LN777PLOL	Powerpoint coverplate 2 gang 5 o'clock olive	EA	$9.97	$1.00	10	200
LN777PLKH	Powerpoint coverplate 2 gang ninja khaki	EA	$9.97	$1.00	10	200
LN777PLDG	Powerpoint coverplate 2 gang wet elephant	EA	$9.97	$1.00	10	200
LN777PLMI	Powerpoint coverplate 2 gang midnight dash	EA	$9.97	$1.00	10	200
LN777PLYE	Powerpoint coverplate 2 gang sunshine	EA	$9.97	$1.00	10	200
LN777PLOG	Powerpoint coverplate 2 gang orange crush	EA	$9.97	$1.00	10	200
LN777PLPI	Powerpoint coverplate 2 gang bubblegum	EA	$9.97	$1.00	10	200
LN777PLRE	Powerpoint coverplate 2 gang saucy red	EA	$9.97	$1.00	10	200
LN777PLSB	Powerpoint coverplate 2 gang cheeky boy blue	EA	$9.97	$1.00	10	200
LN777PLAU	Powerpoint coverplate 2 gang abracadabra	EA	$9.97	$1.00	10	200
	Coverplates for double powerpoints with extra hole					
LN777XPLWE	Powerpoint coverplate 2 gang with extra hole white	EA	$3.50	$0.35	10	200
LN777XPLBL	Powerpoint coverplate 2 gang with extra hole black	EA	$3.50	$0.35	10	200
LN777XPLCR	Powerpoint coverplate 2 gang with extra hole cream	EA	$3.50	$0.35	10	200
LN777XPLMS	Powerpoint coverplate 2 gang with extra hole matt silver	EA	$7.91	$0.79	10	200
LN777XPLAS	Powerpoint coverplate 2 gang with extra hole asphalt	EA	$7.91	$0.79	10	200
LN777XPLGL	Powerpoint coverplate 2 gang with extra hole gun metal	EA	$7.91	$0.79	10	200
LN777XPLVA	Powerpoint coverplate 2 gang with extra hole runaway bride	EA	$9.97	$1.00	10	200
LN777XPLLG	Powerpoint coverplate 2 gang with extra hole ghost gum	EA	$9.97	$1.00	10	200
LN777XPLOL	Powerpoint coverplate 2 gang with extra hole 5 o'clock olive	EA	$9.97	$1.00	10	200
LN777XPLKH	Powerpoint coverplate 2 gang with extra hole ninja khaki	EA	$9.97	$1.00	10	200
LN777XPLDG	Powerpoint coverplate 2 gang with extra hole wet elephant	EA	$9.97	$1.00	10	200
LN777XPLMI	Powerpoint coverplate 2 gang with extra hole midnight dash	EA	$9.97	$1.00	10	200
LN777XPLYE	Powerpoint coverplate 2 gang with extra hole sunshine	EA	$9.97	$1.00	10	200
LN777XPLOG	Powerpoint coverplate 2 gang with extra hole orange crush	EA	$9.97	$1.00	10	200

N New product | ECO Energy Saving products | More info available. See technical pages | COMING SOON Coming soon | Product to be discontinued

Whilst most items are stock lines some products are made to order. UoM = Unit Of Measure.
Prices are effective 1 June 2017 and are subject to change without notice. Trade prices exclude GST.

Linea

Coverplates

LN777APLWE

LN777APLYE

LN777APLPI

LN777ESPLGL

LN777ESPLOL

LN777ESPLKH

Cat.Nos	Coverplates for double powerpoints with extra hole	UoM	Trade price $	GST $	Box qty	Carton qty
LN777XPLPI	Powerpoint coverplate 2 gang with extra hole bubblegum	EA	$9.97	$1.00	10	200
LN777XPLRE	Powerpoint coverplate 2 gang with extra hole saucy red	EA	$9.97	$1.00	10	200
LN777XPLSB	Powerpoint coverplate 2 gang with extra hole cheeky boy blue	EA	$9.97	$1.00	10	200
LN777XPLAU	Powerpoint coverplate 2 gang with extra hole abracadabra	EA	$9.97	$1.00	10	200
	Coverplates for autoswitched double powerpoints					
LN777APLWE	Powerpoint coverplate 2 gang autoswitch white	EA	$3.50	$0.35	10	200
LN777APLBL	Powerpoint coverplate 2 gang autoswitch black	EA	$3.50	$0.35	10	200
LN777APLCR	Powerpoint coverplate 2 gang autoswitch cream	EA	$3.50	$0.35	10	200
LN777APLMS	Powerpoint coverplate 2 gang autoswitch matt silver	EA	$7.91	$0.79	10	200
LN777APLAS	Powerpoint coverplate 2 gang autoswitch asphalt	EA	$7.91	$0.79	10	200
LN777APLGL	Powerpoint coverplate 2 gang autoswitch gun metal	EA	$7.91	$0.79	10	200
LN777APLVA	Powerpoint coverplate 2 gang autoswitch runaway bride	EA	$9.97	$1.00	10	200
LN777APLLG	Powerpoint coverplate 2 gang autoswitch ghost gum	EA	$9.97	$1.00	10	200
LN777APLOL	Powerpoint coverplate 2 gang autoswitch 5 o'clock olive	EA	$9.97	$1.00	10	200
LN777APLKH	Powerpoint coverplate 2 gang autoswitch ninja khaki	EA	$9.97	$1.00	10	200
LN777APLDG	Powerpoint coverplate 2 gang autoswitch wet elephant	EA	$9.97	$1.00	10	200
LN777APLMI	Powerpoint coverplate 2 gang autoswitch midnight dash	EA	$9.97	$1.00	10	200
LN777APLYE	Powerpoint coverplate 2 gang autoswitch sunshine	EA	$9.97	$1.00	10	200
LN777APLOG	Powerpoint coverplate 2 gang autoswitch orange crush	EA	$9.97	$1.00	10	200
LN777APLPI	Powerpoint coverplate 2 gang autoswitch bubblegum	EA	$9.97	$1.00	10	200
LN777APLRE	Powerpoint coverplate 2 gang autoswitch saucy red	EA	$9.97	$1.00	10	200
LN777APLSB	Powerpoint coverplate 2 gang autoswitch cheeky boy blue	EA	$9.97	$1.00	10	200
LN777APLAU	Powerpoint coverplate 2 gang autoswitch abracadabra	EA	$9.97	$1.00	10	200
	Coverplates for double powerpoints with extra safety					
LN777ESPLWE	Powerpoint coverplate 2 gang with extra safety white	EA	$3.50	$0.35	10	120
LN777ESPLBL	Powerpoint coverplate 2 gang with extra safety black	EA	$3.50	$0.35	10	120
LN777ESPLMS	Powerpoint coverplate 2 gang with extra safety matt silver	EA	$7.91	$0.79	10	120
LN777ESPLAS	Powerpoint coverplate 2 gang with extra safety asphalt	EA	$7.91	$0.79	10	120
LN777ESPLVA	Powerpoint coverplate 2 gang with extra safety runaway bride	EA	$9.97	$1.00	10	120
LN777ESPLGL	Powerpoint coverplate 2 gang with extra safety gun metal	EA	$7.91	$0.79	10	120
LN777ESPLLG	Powerpoint coverplate 2 gang with extra safety ghost gum	EA	$9.97	$1.00	10	120
LN777ESPLOL	Powerpoint coverplate 2 gang with extra safety 5 o'clock olive	EA	$9.97	$1.00	10	120
LN777ESPLKH	Powerpoint coverplate 2 gang with extra safety ninja khaki	EA	$9.97	$1.00	10	120
LN777ESPLDG	Powerpoint coverplate 2 gang with extra safety wet elephant	EA	$9.97	$1.00	10	120

N New product | ECO Energy Saving products | More info available. See technical pages | COMING SOON Coming soon | Product to be discontinued

Whilst most items are stock lines some products are made to order. UoM = Unit Of Measure.
Prices are effective 1 June 2017 and are subject to change without notice. Trade prices exclude GST.

Linea

Coverplates

LN777AESPLRE

LN777AESPLSB

LN777AESPLAU

LN777AESPLBL

LN777AESPLGL

LN777AESPLKH

Cat.Nos	Coverplates for double powerpoints with extra safety	UoM	Trade price $	GST $	Box qty	Carton qty
	Double powerpoint coverplates					
LN777ESPLMI	Powerpoint coverplate 2 gang with extra safety midnight dash	EA	$9.97	$1.00	10	120
LN777ESPLYE	Powerpoint coverplate 2 gang with extra safety sunshine	EA	$9.97	$1.00	10	120
LN777ESPLOG	Powerpoint coverplate 2 gang with extra safety orange crush	EA	$9.97	$1.00	10	120
LN777ESPLPI	Powerpoint coverplate 2 gang with extra safety bubblegum	EA	$9.97	$1.00	10	120
LN777ESPLRE	Powerpoint coverplate 2 gang with extra safety saucy red	EA	$9.97	$1.00	10	120
LN777ESPLSB	Powerpoint coverplate 2 gang with extra safety cheeky boy blue	EA	$9.97	$1.00	10	120
LN777ESPLAU	Powerpoint coverplate 2 gang with extra safety abracadabra	EA	$9.97	$1.00	10	120
	Coverplates for autoswitched double powerpoints with extra safety					
LN777AESPLWE	Powerpoint coverplate 2 gang autoswitch with extra safety white	EA	$3.50	$0.35	10	120
LN777AESPLBL	Powerpoint coverplate 2 gang autoswitch with extra safety black	EA	$3.50	$0.35	10	120
LN777AESPLMS	Powerpoint coverplate 2 gang autoswitch with extra safety matt silver	EA	$7.91	$0.79	10	120
LN777AESPLAS	Powerpoint coverplate 2 gang autoswitch with extra safety asphalt	EA	$7.91	$0.79	10	120
LN777AESPLGL	Powerpoint coverplate 2 gang autoswitch with extra safety gun metal	EA	$7.91	$0.79	10	120
LN777AESPLVA	Powerpoint coverplate 2 gang autoswitch with extra safety runaway bride	EA	$9.97	$1.00	10	120
LN777AESPLLG	Powerpoint coverplate 2 gang autoswitch with extra safety ghost gum	EA	$9.97	$1.00	10	120
LN777AESPLOL	Powerpoint coverplate 2 gang autoswitch with extra safety 5 o'clock olive	EA	$9.97	$1.00	10	120
LN777AESPLKH	Powerpoint coverplate 2 gang autoswitch with extra safety ninja khaki	EA	$9.97	$1.00	10	120
LN777AESPLDG	Powerpoint coverplate 2 gang autoswitch with extra safety wet elephant	EA	$9.97	$1.00	10	120
LN777AESPLMI	Powerpoint coverplate 2 gang autoswitch with extra safety midnight dash	EA	$9.97	$1.00	10	120
LN777AESPLYE	Powerpoint coverplate 2 gang autoswitch with extra safety sunshine	EA	$9.97	$1.00	10	120
LN777AESPLOG	Powerpoint coverplate 2 gang autoswitch with extra safety orange crush	EA	$9.97	$1.00	10	120
LN777AESPLPI	Powerpoint coverplate 2 gang autoswitch with extra safety bubblegum	EA	$9.97	$1.00	10	120
LN777AESPLRE	Powerpoint coverplate 2 gang autoswitch with extra safety saucy red	EA	$9.97	$1.00	10	120
LN777AESPLSB	Powerpoint coverplate 2 gang autoswitch with extra safety cheeky boy blue	EA	$9.97	$1.00	10	120
LN777AESPLAU	Powerpoint coverplate 2 gang autoswitch with extra safety abracadabra	EA	$9.97	$1.00	10	120

N New product | ECO Energy Saving products | More info available. See technical pages | COMING SOON Coming soon | Product to be discontinued

Whilst most items are stock lines some products are made to order. UoM = Unit Of Measure.
Prices are effective 1 June 2017 and are subject to change without notice. Trade prices exclude GST.

Linea

Installation accessories

LN711

LN751

LN429

LNPC

Cat.Nos		UoM	Trade price $	GST $	Box qty	Carton qty
	Mounting brackets					
LN711	Mounting clips metal for 5mm plasterboard walls	EA	$2.14	$0.21	10	100
	Shrouds					
LN751	Shroud black for Linea range	EA	$4.95	$0.50	10	300
	Wall boxes					
LN429	Wall box black for Linea range	EA	$5.51	$0.55	10	120
	Paint cover					
LNPC	Paint cover transparent for Linea range	EA	$0.31	$0.03	-	500

N New product | ECO Energy Saving products | More info available. See technical pages | COMING SOON Coming soon | Product to be discontinued

Whilst most items are stock lines some products are made to order. UoM = Unit Of Measure.
Prices are effective 1 June 2017 and are subject to change without notice. Trade prices exclude GST.

Excel Life - dedicated plate series

Switches

ED770/1WE

ED770/2UG

ED770/3BL

ED770/4WE

ED770/40DPCTPWE

ED770/1IPWE

Cat.Nos	Vertical		UoM	Trade price $	GST $	Box qty	Carton qty
	Rocker switches - 16AX 2 way single Pole Double Throw (SPDT)						
ED770/1WE	Switch 1 gang 16AX 240V a.c. white		EA	$8.08	$0.81	10	120
ED770/1UG	Switch 1 gang 16AX 240V a.c. urban grey		EA	$11.37	$1.14	10	120
ED770/1BL	Switch 1 gang 16AX 240V a.c. black	N	EA	$8.24	$0.82	10	120
ED770/2WE	Switch 2 gang 16AX 240V a.c. white		EA	$13.40	$1.34	10	120
ED770/2UG	Switch 2 gang 16AX 240V a.c. urban grey		EA	$16.80	$1.68	10	120
ED770/2BL	Switch 2 gang 16AX 240V a.c. black	N	EA	$13.68	$1.37	10	120
ED770/3WE	Switch 3 gang 16AX 240V a.c. white		EA	$26.17	$2.62	10	120
ED770/3UG	Switch 3 gang 16AX 240V a.c. urban grey		EA	$29.29	$2.93	10	120
ED770/3BL	Switch 3 gang 16AX 240V a.c. black	N	EA	$26.17	$2.62	10	120
ED770/4WE	Switch 4 gang 16AX 240V a.c. white		EA	$40.78	$4.08	10	120
ED770/4UG	Switch 4 gang 16AX 240V a.c. urban grey		EA	$43.90	$4.39	10	120
ED770/4BL	Switch 4 gang 16AX 240V a.c. black	N	EA	$40.78	$4.08	10	120
ED770/5WE	Switch 5 gang 16AX 240V a.c. white		EA	$57.61	$5.76	10	120
ED770/5UG	Switch 5 gang 16AX 240V a.c. urban grey		EA	$60.73	$6.07	10	120
ED770/5BL	Switch 5 gang 16AX 240V a.c. black	N	EA	$57.61	$5.76	10	120
ED770/6WE	Switch 6 gang 16AX 240V a.c. white		EA	$67.78	$6.78	10	120
ED770/6UG	Switch 6 gang 16AX 240V a.c. urban grey		EA	$70.90	$7.09	10	120
ED770/6BL	Switch 6 gang 16AX 240V a.c. black	N	EA	$67.78	$6.78	10	120
	Heavy duty rocker switches						
ED770/40WE	Switch 1 gang 40A 240V a.c. white		EA	$24.69	$2.47	10	120
ED770/40UG	Switch 1 gang 40A 240V a.c. urban grey		EA	$27.82	$2.78	10	120
ED770/40DPWE	Switch 1 gang double pole 40A 240V a.c. white		EA	$36.08	$3.61	10	120
ED770/40DPUG	Switch 1 gang double pole 40A 240V a.c. urban grey		EA	$39.20	$3.92	10	120
ED770/40DPCTPWE	Switch 1 gang double pole 40A 240V a.c. "Cooktop" engraved white		EA	$40.73	$4.07	10	120
ED770/40DPCTPUG	Switch 1 gang double pole 40A 240V a.c. "Cooktop" engraved urban grey		EA	$43.86	$4.39	10	120
ED770/40DPCTPBL	Switch 1 gang double pole 40A 240V a.c. "Cooktop" engraved black	N	EA	$40.73	$4.07	10	120
	Weatherproof IP66 rocker switches - 16AX 2 way Single Pole Double Throw (SPDT)						
ED770/1IPWE	Switch 1 gang IP66 16AX 240V a.c. white		EA	$29.91	$2.99	6	72
ED770/1IPUG	Switch 1 gang IP66 16AX 240V a.c. urban grey		EA	$33.03	$3.30	6	72
ED770/2IPWE	Switch 2 gang IP66 16AX 240V a.c. white		EA	$40.82	$4.08	6	72
ED770/2IPUG	Switch 2 gang IP66 16AX 240V a.c. urban grey		EA	$43.94	$4.39	6	72
ED770/3IPWE	Switch 3 gang IP66 16AX 240V a.c. white		EA	$52.44	$5.24	6	72
ED770/4IPWE	Switch 4 gang IP66 16AX 240V a.c. white		EA	$65.18	$6.52	6	72

N New product | ECO Energy Saving products | More info available. See technical pages | COMING SOON Coming soon | Product to be discontinued

Whilst most items are stock lines some products are made to order. UoM = Unit Of Measure.
Prices are effective 1 June 2017 and are subject to change without notice. Trade prices exclude GST.

Excel Life - dedicated plate series

Switches

ED3FCWE

ED770/4FLHHCWE

EDA770/1WE

ED770/2HWE

ED20A/4KTWE

EDKFSWE

Cat.Nos	Vertical	UoM	Trade price $	GST $	Box qty	Carton qty
	Fan controllers					
ED3FCWE	Fan controller 1 gang 100VA 3 speed white	EA	$52.05	$5.20	-	100
	Instant heat controllers					
ED770/3FLHWE	Switch 3 gang 10A 240V a.c. "Fan/Light/Heat" engraved white	EA	$29.65	$2.96	10	120
ED770/3FLHCWE	Switch 3 gang 10A 240V a.c. "Fan/Light/Heat" engraved with capacitor white*	EA	$36.38	$3.64	10	120
ED770/4FLHHWE	Switch 4 gang 10A 240V a.c. "Fan/Light/Heat/Heat" engraved white	EA	$44.26	$4.43	10	120
ED770/4FLHHCWE	Switch 4 gang 10A 240V a.c. "Fan/Light/Heat/Heat" engraved with capacitor white*	EA	$50.99	$5.10	10	120
	Architrave					
EDA770/1WE	Architrave switch 1 gang 16AX white	EA	$9.10	$0.91	10	120
EDA770/2WE	Architrave switch 2 gang 16AX white	EA	$22.42	$2.24	10	120
EDA770/3WE	Architrave switch 3 gang 16AX white	EA	$35.29	$3.53	10	120
	Horizontal					
	Rocker switches - Single Pole Double Throw (SPDT)					
ED770/1HWE	Switch 1 gang 16AX 240V a.c. white	EA	$8.08	$0.81	10	120
ED770/2HWE	Switch 2 gang 16AX 240V a.c. white	EA	$13.40	$1.34	10	120
ED770/3HWE	Switch 3 gang 16AX 240V a.c. white	EA	$26.17	$2.62	10	120
ED770/4HWE	Switch 4 gang 16AX 240V a.c. white	EA	$40.78	$4.08	10	120
ED770/5HWE	Switch 5 gang 16AX 240V a.c. white	EA	$57.61	$5.76	10	120
ED770/6HWE	Switch 6 gang 16AX 240V a.c. white	EA	$67.78	$6.78	10	120
	Weatherproof IP66 rocker switches - Single Pole Double Throw (SPDT)					
ED770/1HIPWE	Switch 1 gang IP66 16AX 240V a.c. white	EA	$29.91	$2.99	6	72
ED770/2HIPWE	Switch 2 gang IP66 16AX 240V a.c. white	EA	$40.82	$4.08	6	72
	Hospitality					
	Keycard switches					
ED20A/4KTWE	Keycard switch 1 gang 4 x 20A 240V a.c. white	EA	$173.13	$17.31	10	120
ED20A/4KTUG	Keycard switch 1 gang 4 x 20A 240V a.c. urban grey	EA	$176.25	$17.62	10	120
ED20A/4KTBL	Keycard switch 1 gang 4 x 20A 24w0V a.c. black	EA	$173.13	$17.31	10	120
	Keyfob switches					
EDKFSWE	Key fob switch 30s time delay 1 gang 240V a.c. white	EA	$83.63	$8.36	4	48

*For ducted instant heat models

N New product | ECO Energy Saving products | More info available. See technical pages | COMING SOON Coming soon | Product to be discontinued

Whilst most items are stock lines some products are made to order. UoM = Unit Of Measure.
Prices are effective 1 June 2017 and are subject to change without notice. Trade prices exclude GST.

Excel Life - dedicated plate series

Powerpoints - single and double

ED787WE

ED787XWE

ED787/2XUG

ED787ARWE

ED777WE

ED777BL

Cat.Nos	Horizontal powerpoints	UoM	Trade price $	GST $	Box qty	Carton qty
	Single powerpoints					
ED787WE	Powerpoint 1 gang 10A 240V a.c. white	EA	$10.92	$1.09	10	120
ED787UG	Powerpoint 1 gang 10A 240V a.c. urban grey	EA	$14.27	$1.43	10	120
ED787BL	Powerpoint 1 gang 10A 240V a.c. black N	EA	$11.15	$1.12	10	120
ED787XWE	Powerpoint 1 gang 10A 240V a.c. with extra function hole white	EA	$21.48	$2.15	10	120
ED787XUG	Powerpoint 1 gang 10A 240V a.c. with extra function hole urban grey	EA	$24.60	$2.46	10	120
ED787/2XWE	Powerpoint 1 gang 10A 240V a.c. with 2 extra function holes white	EA	$24.41	$2.44	10	120
ED787/2XUG	Powerpoint 1 gang 10A 240V a.c. with 2 extra function holes urban grey	EA	$27.53	$2.75	10	120
ED787AWE	Powerpoint 1 gang 10A 240V a.c. autoswitch white	EA	$12.39	$1.24	10	120
ED787AUG	Powerpoint 1 gang 10A 240V a.c. autoswitch urban grey	EA	$15.51	$1.55	10	120
ED787DPWE	Powerpoint 1 gang double pole 10A 240V a.c. white	EA	$32.02	$3.20	10	120
ED787DPUG	Powerpoint 1 gang double pole 10A 240V a.c. urban grey	EA	$35.14	$3.51	10	120
ED787ARWE	Powerpoint 1 gang 10A 240V a.c. autoswitch with round earth white	EA	$49.66	$4.97	10	120
ED787ARUG	Powerpoint 1 gang 10A 240V a.c. autoswitch with round earth urban grey	EA	$52.78	$5.28	10	120
ED787RWE	Powerpoint 1 gang 10A 240V a.c. with round earth white	EA	$49.66	$4.97	10	120
ED787RUG	Powerpoint 1 gang 10A 240V a.c. with round earth urban grey	EA	$52.78	$5.28	10	120
ED787/15WE	Powerpoint 1 gang 15A 240V a.c. white	EA	$22.75	$2.28	10	120
ED787/15UG	Powerpoint 1 gang 15A 240V a.c. urban grey	EA	$25.87	$2.59	10	120
ED787/15BL	Powerpoint 1 gang 15A 240V a.c. black N	EA	$22.75	$2.28	10	120
ED787A/15WE	Powerpoint 1 gang 15A 240V a.c. autoswitch white	EA	$25.70	$2.57	10	120
ED787A/15UG	Powerpoint 1 gang 15A 240V a.c. autoswitch urban grey	EA	$28.83	$2.88	10	120
ED787/20WE	Powerpoint 1 gang 20A 240V a.c. white	EA	$32.68	$3.27	10	120
ED787/20UG	Powerpoint 1 gang 20A 240V a.c. urban grey	EA	$35.80	$3.58	10	120
ED787/25WE	Powerpoint 1 gang 25A 240V a.c. white	EA	$63.25	$6.32	10	120
ED787/25UG	Powerpoint 1 gang 25A 240V a.c. urban grey	EA	$66.37	$6.64	10	120
ED787U/32WE	Powerpoint 1 gang 32A 240V a.c. unswitched white N	EA	$67.14	$6.71	10	120
ED787U/32UG	Powerpoint 1 gang 32A 240V a.c. unswitched urban grey N	EA	$70.27	$7.03	10	120
ED787U/32BL	Powerpoint 1 gang 32A 240V a.c. unswitched black N	EA	$67.14	$6.71	10	120
	Double powerpoints					
ED777WE	Powerpoint 2 gang 10A 240V a.c. white	EA	$16.30	$1.63	10	120
ED777UG	Powerpoint 2 gang 10A 240V a.c. urban grey	EA	$19.76	$1.98	10	120
ED777BL	Powerpoint 2 gang 10A 240V a.c. black N	EA	$16.64	$1.66	10	120
ED777XWE	Powerpoint 2 gang 10A 240V a.c. with extra function hole white	EA	$33.76	$3.38	10	120
ED777XUG	Powerpoint 2 gang 10A 240V a.c. with extra function hole urban grey	EA	$36.88	$3.69	10	120

N New product | ECO Energy Saving products | More info available. See technical pages | COMING SOON Coming soon | Product to be discontinued

Whilst most items are stock lines some products are made to order. UoM = Unit Of Measure.
Prices are effective 1 June 2017 and are subject to change without notice. Trade prices exclude GST.

Excel Life - dedicated plate series

Powerpoints

ED777USB2PSAWE

ED777USB2IUG

ED777ABL

ED777XBL

ED777ESWE

Cat.Nos	Horizontal powerpoints	UoM	Trade price $	GST $	Box qty	Carton qty
	Double powerpoints					
ED777XBL	Powerpoint 2 gang 10A 240V a.c. with extra function hole black N	EA	$33.76	$3.38	10	120
ED777ESWE	Powerpoint 2 gang 10A 240V a.c. with extra safety white	EA	$23.75	$2.38	10	120
ED777ESUG	Powerpoint 2 gang 10A 240V a.c. with extra safety urban grey	EA	$26.87	$2.69	10	120
ED777AWE	Powerpoint 2 gang 10A 240V a.c. autoswitch white	EA	$18.95	$1.90	10	120
ED777AUG	Powerpoint 2 gang 10A 240V a.c. autoswitch urban grey	EA	$22.07	$2.21	10	120
ED777ABL	Powerpoint 2 gang 10A 240V a.c. autoswitch black N	EA	$18.95	$1.90	10	120
ED777AESWE	Powerpoint 2 gang 10A 240V a.c. autoswitch with safety shutters white	EA	$34.14	$3.41	10	120
ED777AESUG	Powerpoint 2 gang 10A 240V a.c. autoswitch with safety shutters urban grey	EA	$37.27	$3.73	10	120
ED777DPWE	Powerpoint 2 gang double pole 10A 240V a.c. white	EA	$49.23	$4.92	10	120
ED777DPUG	Powerpoint 2 gang double pole 10A 240V a.c. urban grey	EA	$52.35	$5.24	10	120
ED777RWE	Powerpoint 2 gang 10A 240V a.c. with round earth white	EA	$69.48	$6.95	10	120
ED777RUG	Powerpoint 2 gang 10A 240V a.c. with round earth urban grey	EA	$72.60	$7.26	10	120
ED777/15WE	Powerpoint 2 gang 15A 240V a.c. white	EA	$69.37	$6.94	10	120
ED777/15UG	Powerpoint 2 gang 15A 240V a.c. urban grey	EA	$72.50	$7.25	10	120
	Double powerpoints with USB charger for plasterboard and single brick wall installation - Dual type A					
ED777USB2PSAWE	Powerpoint 2 gang 10A 240V a.c. with USB charger 2x2.4A white	EA	$80.68	$8.07	-	12
ED777USB2PSAUG	Powerpoint 2 gang 10A 240V a.c. with USB charger 2x2.4A urban grey	EA	$83.80	$8.38	-	12
	Double powerpoints with USB charger for plasterboard and single brick wall installations - Dual type A engraved "USB chargers"					
ED777USBENGWE	Powerpoint 2 gang 10A 240V a.c. with USB charger 2x2.4A white N	EA	$88.38	$8.84	-	12
ED777USBENGUG	Powerpoint 2 gang 10A 240V a.c. with USB charger 2x2.4A urban grey N	EA	$91.50	$9.15	-	12
ED777USBENGBL	Powerpoint 2 gang 10A 240V a.c. with USB charger 2x2.4A black N	EA	$88.38	$8.84	-	12
	Double powerpoints with USB charger for wall box, fire box and double brick wall installation - Dual type A					
ED777USB2PSXWE	Powerpoint 2 gang 10A 240V a.c. with USB charger 2x2.4A & inline connector white	EA	$86.92	$8.69	-	12
ED777USB2PSXUG	Powerpoint 2 gang 10A 240V a.c. with USB charger 2x2.4A & inline connector urban grey	EA	$90.05	$9.00	-	12
	Extension lead for dual USB charger mechanisms EMUSB2PSX series					
EAUSBEXT3WE	Extension lead 3m with connectors for EMUSB2PSX USB charger mechanisms	EA	$22.80	$2.28	-	-
	Double powerpoints with integrated USB charger for wall boxes and brick wall installations - Dual type A					
ED777USB2IWE	Powerpoint 2 gang 10A 240Va.c. with integrated USB charger 2.4A white N	EA	$62.46	$6.25	6	120
ED777USB2IUG	Powerpoint 2 gang 10A 240Va.c. with integrated USB charger 2.4A urban grey N	EA	$65.58	$6.56	6	120
ED777USB2IBL	Powerpoint 2 gang 10A 240Va.c. with integrated USB charger 2.4A black N	EA	$62.46	$6.25	6	120

N New product | ECO Energy Saving products | More info available. See technical pages | COMING SOON Coming soon | Product to be discontinued

Whilst most items are stock lines some products are made to order. UoM = Unit Of Measure.
Prices are effective 1 June 2017 and are subject to change without notice. Trade prices exclude GST.

Excel Life - dedicated plate series

Powerpoints

ED777USB1CWE

ED777EL30WE

ED7774WE

Cat.Nos	Horizontal powerpoints		UoM	Trade price $	GST $	Box qty	Carton qty
	Double powerpoints with USB charger for plasterboard and single brick wall installations - Type A and Type C						
ED777USB2ACWE	Powerpoint 2 gang 10A 240Va.c. with type A&C USB charger 2x2.4A white	N	EA	$87.50	$8.75	-	12
ED777USB2ACUG	Powerpoint 2 gang 10A 240Va.c. with type A&C USB charger 2x2.4A urban grey	N	EA	$90.50	$9.05	-	12
ED777USB2ACBL	Powerpoint 2 gang 10A 240Va.c. with type A&C USB charger 2x2.4A black	N	EA	$87.50	$8.75	-	12
	Double powerpoints with USB charger for plasterboard and single brick wall installations - Single type C						
ED777USB1CWE	Powerpoint 2 gang 10A 240Va.c. with type C USB charger 45W white	COMING SOON	EA	$99.90	$9.99	-	12
ED777USB1CUG	Powerpoint 2 gang 10A 240Va.c. with type C USB charger 45W urban grey	COMING SOON	EA	$101.90	$10.19	-	12
ED777USB1CBL	Powerpoint 2 gang 10A 240Va.c. with type C USB charger 45W black	COMING SOON	EA	$99.90	$9.99	-	12
	Double powerpoints with RCD protection						
ED777EL30WE	Powerpoint 2 gang 10A 240V a.c. with RCD 30mA white		EA	$180.12	$18.01	-	12
ED777EL30UG	Powerpoint 2 gang 10A 240V a.c. with RCD 30mA urban grey		EA	$183.25	$18.32	-	12
ED777EL10WE	Powerpoint 2 gang 10A 240V a.c. with RCD 10mA white		EA	$218.77	$21.88	-	12
ED777EL10UG	Powerpoint 2 gang 10A 240V a.c. with RCD 10mA urban grey		EA	$221.89	$22.19	-	12
	4 Gang powerpoints						
ED7774WE	Powerpoint 4 gang 10A 240V a.c. white		EA	$56.36	$5.64	5	40
ED7774UG	Powerpoint 4 gang 10A 240V a.c. urban grey		EA	$59.48	$5.95	5	40
ED7774BL	Powerpoint 4 gang 10A 240V a.c. urban black	N	EA	$56.36	$5.64	5	40

N New product | ECO Energy Saving products | More info available. See technical pages | COMING SOON Coming soon | Product to be discontinued

Whilst most items are stock lines some products are made to order. UoM = Unit Of Measure.
Prices are effective 1 June 2017 and are subject to change without notice. Trade prices exclude GST.

Excel Life - dedicated plate series

Powerpoints and data, audio & video sockets

EDV787/2XWE

EDV787ARWE

EDV777WE

EDV777XWE

EDV777AWE

EDWCWEMS

Cat.Nos	Vertical powerpoints	UoM	Trade price $	GST $	Box qty	Carton qty
	Single powerpoints					
EDV787WE	Powerpoint 1 gang 10A 240V a.c. white	EA	$19.22	$1.92	10	120
EDV787UG	Powerpoint 1 gang 10A 240V a.c. urban grey	EA	$22.34	$2.23	10	120
EDV787BL	Powerpoint 1 gang 10A 240V a.c. black N	EA	$19.22	$1.92	10	120
EDV787XWE	Powerpoint 1 gang 10A 240V a.c. with extra function hole white	EA	$37.53	$3.75	10	120
EDV787XUG	Powerpoint 1 gang 10A 240V a.c. with extra function hole urban grey	EA	$40.65	$4.06	10	120
EDV787/2XWE	Powerpoint 1 gang 10A 240V a.c. with 2 extra function holes white	EA	$49.31	$4.93	10	120
EDV787/2XUG	Powerpoint 1 gang 10A 240V a.c. with 2 extra function holes urban grey	EA	$52.44	$5.24	10	120
EDV787RWE	Powerpoint 1 gang 10A 240V a.c. with round earth white	EA	$62.06	$6.21	10	120
EDV787RUG	Powerpoint 1 gang 10A 240V a.c. with round earth urban grey	EA	$65.19	$6.52	10	120
EDV787ARWE	Powerpoint 1 gang 10A 240V a.c. autoswitch with round earth white	EA	$39.86	$3.99	10	120
EDV787ARUG	Powerpoint 1 gang 10A 240V a.c. autoswitch with round earth urban grey	EA	$65.19	$6.52	10	120
EDV787/15WE	Powerpoint 1 gang 15A 240V a.c. white	EA	$39.86	$3.99	10	120
EDV787/15UG	Powerpoint 1 gang 15A 240V a.c. urban grey	EA	$42.98	$4.30	10	120
EDV787A/15WE	Powerpoint 1 gang 15A 240V a.c. autoswitch white	EA	$39.86	$3.99	10	120
EDV787A/15UG	Powerpoint 1 gang 15A 240V a.c. autoswitch urban grey	EA	$42.98	$4.30	10	120
	Double powerpoints					
EDV777WE	Powerpoint 2 gang 10A 240V a.c. white	EA	$30.76	$3.08	10	120
EDV777UG	Powerpoint 2 gang 10A 240V a.c. urban grey	EA	$33.88	$3.39	10	120
EDV777BL	Powerpoint 2 gang 10A 240V a.c. black N	EA	$30.76	$3.08	10	120
EDV777XWE	Powerpoint 2 gang 10A 240V a.c. with extra function hole white	EA	$57.10	$5.71	10	120
EDV777XUG	Powerpoint 2 gang 10A 240V a.c. with extra function hole urban grey	EA	$60.22	$6.02	10	120
EDV777XBL	Powerpoint 2 gang 10A 240V a.c. with extra function hole black N	EA	$57.10	$5.71	10	120
EDV777AWE	Powerpoint 2 gang 10A 240V a.c. autoswitch white	EA	$30.76	$3.08	10	120
EDV777AUG	Powerpoint 2 gang 10A 240V a.c. autoswitch urban grey	EA	$33.88	$3.39	10	120

	Wireless Charging - Induction					
	Wall mount wireless charging station Type A USB port					
EDWCWEMS	Wireless charger 1A with Type A USB port 2.4A silver COMING SOON	EA	$92.90	$9.30	1	10
	Tamper-proof outdoor wireless charger					
077599	Wireless charger 1A IK08-IP66 (80051 to be used for mounting) COMING SOON	EA	$112.90	$11.30	1	10
	Table top mount wireless charger pad					
077580	Wireless charging pad 1A IK04-IP4 80mm cut-out (supplied with 2.5mm micro USB/USB cord for supply) COMING SOON	EA	$57.00	$5.70	1	10

N New product | ECO Energy Saving products | More info available. See technical pages | COMING SOON Coming soon | Product to be discontinued

Whilst most items are stock lines some products are made to order. UoM = Unit Of Measure.
Prices are effective 1 June 2017 and are subject to change without notice. Trade prices exclude GST.

Excel Life – dedicated plate series

Grid & plates

ED770/1GPLWE

ED770/2GPLBL

ED770/3GPLUG

ED770/4GPLWE

ED770/5GPLUG

ED770/6GPLWE

Cat.Nos	Shaver outlets		UoM	Trade price $	GST	Box qty	Carton qty
ED798BL	Shaver outlet 10A 115/240V a.c. black	N	EA	$188.94	$18.89	2	16
	Shaver outlets						
	USB dual charger for installation in wall box						
ED920USB2WE	Dual USB charger Type A 1.5A 2 module white		EA	$50.18	$5.02	3	36
	Grid & plates						
	For EM series mechanisms						
ED770/1GPLWE	Grid & plate 1 gang white		EA	$4.42	$0.44	10	120
ED770/1GPLUG	Grid & plate 1 gang urban grey		EA	$7.55	$0.76	10	120
ED770/1GPLBL	Grid & plate 1 gang black	N	EA	$4.42	$0.44	10	120
ED770/2GPLWE	Grid & plate 2 gang white		EA	$4.49	$0.45	10	120
ED770/2GPLUG	Grid & plate 2 gang urban grey		EA	$7.61	$0.76	10	120
ED770/2GPLBL	Grid & plate 2 gang black	N	EA	$4.49	$0.45	10	120
ED770/3GPLWE	Grid & plate 3 gang white		EA	$4.49	$0.45	10	120
ED770/3GPLUG	Grid & plate 3 gang urban grey		EA	$7.61	$0.76	10	120
ED770/3GPLBL	Grid & plate 3 gang black	N	EA	$4.49	$0.45	10	120
ED770/4GPLWE	Grid & plate 4 gang white		EA	$7.85	$0.78	10	120
ED770/4GPLUG	Grid & plate 4 gang urban grey		EA	$10.97	$1.10	10	120
ED770/4GPLBL	Grid & plate 4 gang black	N	EA	$7.85	$0.78	10	120
ED770/5GPLWE	Grid & plate 5 gang white		EA	$7.85	$0.78	10	120
ED770/5GPLUG	Grid & plate 5 gang urban grey		EA	$10.97	$1.10	10	120
ED770/5GPLBL	Grid & plate 5 gang black	N	EA	$7.85	$0.78	10	120
ED770/6GPLWE	Grid & plate 6 gang white		EA	$7.85	$0.78	10	120
ED770/6GPLUG	Grid & plate 6 gang urban grey		EA	$10.97	$1.10	10	120
ED770/6GPLBL	Grid & plate 6 gang black	N	EA	$7.85	$0.78	10	120
ED770/0GPLWE	Grid & plate blank white		EA	$4.49	$0.45	10	120
ED770/0GPLUG	Grid & plate blank urban grey		EA	$7.61	$0.76	10	120
ED770/0GPLBL	Grid & plate blank black	N	EA	$4.49	$0.45	10	120
	Grids and plates for Arteor mechanisms						
ED920GPLWE	Grid & plate white for 2 x 22.5x45mm modules		EA	$4.49	$0.45	10	120
ED920GPLBL	Grid & plate black for 2 x 22.5x45mm modules	N	EA	$4.49	$0.45	10	120

N New product | ECO Energy Saving products | More info available. See technical pages | COMING SOON Coming soon | Product to be discontinued

Whilst most items are stock lines some products are made to order. UoM = Unit Of Measure.
Prices are effective 1 June 2017 and are subject to change without notice. Trade prices exclude GST.

Excel Life – dedicated plate series

Grid & plates

EDA770/1GPLWE

EDA770/2GPLWE

EDA770/2GPLUG

EDA770/3GPLBL

EDA770/4GPLWE

Cat.Nos	Grid & plates		UoM	Trade price $	GST $	Box qty	Carton qty
	Architrave						
EDA770/1GPLWE	Architrave grid & plate 1 gang white		EA	$4.49	$0.45	10	120
EDA770/1GPLUG	Architrave grid & plate 1 gang urban grey		EA	$7.61	$0.76	10	120
EDA770/1GPLBL	Architrave grid & plate 1 gang black	N	EA	$4.49	$0.45	10	120
EDA770/2GPLWE	Architrave grid & plate 2 gang white		EA	$4.49	$0.45	10	120
EDA770/2GPLUG	Architrave grid & plate 2 gang urban grey		EA	$7.61	$0.76	10	120
EDA770/2GPLBL	Architrave grid & plate 2 gang black	N	EA	$4.49	$0.45	10	120
EDA770/3GPLWE	Architrave grid & plate 3 gang white		EA	$11.23	$1.12	10	120
EDA770/3GPLUG	Architrave grid & plate 3 gang urban grey		EA	$14.36	$1.44	10	120
EDA770/3GPLBL	Architrave grid & plate 3 gang black	N	EA	$11.23	$1.12	10	120
EDA770/4GPLWE	Architrave grid & plate 4 gang white		EA	$11.23	$1.12	10	120
EDA770/4GPLUG	Architrave grid & plate 4 gang urban grey		EA	$14.36	$1.44	10	120
EDA770/4GPLBL	Architrave grid & plate 4 gang black	N	EA	$11.23	$1.12	10	120

N New product | ECO Energy Saving products | More info available. See technical pages | COMING SOON Coming soon | Product to be discontinued

Whilst most items are stock lines some products are made to order. UoM = Unit Of Measure.
Prices are effective 1 June 2017 and are subject to change without notice. Trade prices exclude GST.

Excel Life – dedicated plate series

Coverplates

ED770/1PLIC

ED770/1PLDI

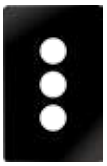
ED770/3PLBL

ED770/4PLWE

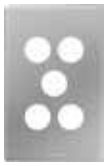
ED770/5PLMS

ED770/6PLUG

Cat.Nos	Switch coverplates – 1 to 6 gang	UoM	Trade price $	GST $	Box qty	Carton qty
ED770/1PLWE	Coverplate 1 gang white	EA	$3.26	$0.33	10	120
ED770/1PLUG	Coverplate 1 gang urban grey	EA	$6.38	$0.64	10	120
ED770/1PLBL	Coverplate 1 gang black N	EA	$3.26	$0.33	10	120
ED770/1PLMS	Coverplate 1 gang matt silver	EA	$6.25	$0.62	10	120
ED770/1PLIC	Coverplate 1 gang ice	EA	$12.90	$1.29	10	120
ED770/1PLDI	Coverplate 1 gang diesel	EA	$12.90	$1.29	10	120
ED770/2PLWE	Coverplate 2 gang white	EA	$3.26	$0.33	10	120
ED770/2PLUG	Coverplate 2 gang urban grey	EA	$6.38	$0.64	10	120
ED770/2PLBL	Coverplate 2 gang black N	EA	$3.26	$0.33	10	120
ED770/2PLMS	Coverplate 2 gang matt silver	EA	$6.25	$0.62	10	120
ED770/2PLIC	Coverplate 2 gang ice	EA	$12.90	$1.29	10	120
ED770/2PLDI	Coverplate 2 gang diesel	EA	$12.90	$1.29	10	120
ED770/3PLWE	Coverplate 3 gang white	EA	$3.26	$0.33	10	120
ED770/3PLUG	Coverplate 3 gang urban grey	EA	$6.38	$0.64	10	120
ED770/3PLBL	Coverplate 3 gang black N	EA	$3.26	$0.33	10	120
ED770/3PLMS	Coverplate 3 gang matt silver	EA	$6.25	$0.62	10	120
ED770/3PLIC	Coverplate 3 gang ice	EA	$12.90	$1.29	10	120
ED770/3PLDI	Coverplate 3 gang diesel	EA	$12.90	$1.29	10	120
ED770/4PLWE	Coverplate 4 gang white	EA	$3.26	$0.33	10	120
ED770/4PLUG	Coverplate 4 gang urban grey	EA	$6.38	$0.64	10	120
ED770/4PLBL	Coverplate 4 gang black N	EA	$3.26	$0.33	10	120
ED770/4PLMS	Coverplate 4 gang matt silver	EA	$6.25	$0.62	10	120
ED770/4PLIC	Coverplate 4 gang ice	EA	$12.90	$1.29	10	120
ED770/4PLDI	Coverplate 4 gang diesel	EA	$12.90	$1.29	10	120
ED770/5PLWE	Coverplate 5 gang white	EA	$3.26	$0.33	10	120
ED770/5PLUG	Coverplate 5 gang urban grey	EA	$6.38	$0.64	10	120
ED770/5PLBL	Coverplate 5 gang black N	EA	$3.26	$0.33	10	120
ED770/5PLMS	Coverplate 5 gang matt silver	EA	$6.25	$0.62	10	120
ED770/5PLIC	Coverplate 5 gang ice	EA	$12.90	$1.29	10	120
ED770/5PLDI	Coverplate 5 gang diesel	EA	$12.90	$1.29	10	120
ED770/6PLWE	Coverplate 6 gang white	EA	$3.26	$0.33	10	120
ED770/6PLUG	Coverplate 6 gang urban grey	EA	$6.38	$0.64	10	120
ED770/6PLBL	Coverplate 6 gang black N	EA	$3.26	$0.33	10	120
ED770/6PLMS	Coverplate 6 gang matt silver	EA	$6.25	$0.62	10	120
ED770/6PLIC	Coverplate 6 gang ice	EA	$12.90	$1.29	10	120
ED770/6PLDI	Coverplate 6 gang diesel	EA	$12.90	$1.29	10	120

N New product | ECO Energy Saving products | More info available. See technical pages | COMING SOON Coming soon | Product to be discontinued

Whilst most items are stock lines some products are made to order. UoM = Unit Of Measure.
Prices are effective 1 June 2017 and are subject to change without notice. Trade prices exclude GST.

Excel Life – dedicated plate series

Coverplates

ED787PLMS

ED777PLWE

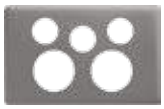
ED777XPLUG

ED777APLWE

EDV787PLWE

EDV787PLMS

Cat.Nos	Powerpoint coverplates	UoM	Trade price $	GST $	Box qty	Carton qty
	Horizontal powerpoints - single and double					
ED787PLWE	Powerpoint coverplate 1 gang white	EA	$3.26	$0.33	10	120
ED787PLUG	Powerpoint coverplate 1 gang urban grey	EA	$6.38	$0.64	10	120
ED787PLBL	Powerpoint coverplate 1 gang black N	EA	$3.26	$0.33	10	120
ED787PLMS	Powerpoint coverplate 1 gang matt silver	EA	$6.25	$0.62	10	120
ED787PLIC	Powerpoint coverplate 1 gang ice	EA	$12.90	$1.29	10	120
ED787PLDI	Powerpoint coverplate 1 gang diesel	EA	$12.90	$1.29	10	120
ED777PLWE	Powerpoint coverplate 2 gang white	EA	$3.26	$0.33	10	120
ED777PLUG	Powerpoint coverplate 2 gang urban grey	EA	$6.38	$0.64	10	120
ED777PLBL	Powerpoint coverplate 2 gang black N	EA	$3.26	$0.33	10	120
ED777PLMS	Powerpoint coverplate 2 gang matt silver	EA	$6.25	$0.62	10	120
ED777PLIC	Powerpoint coverplate 2 gang ice	EA	$12.90	$1.29	10	120
ED777PLDI	Powerpoint coverplate 2 gang diesel	EA	$12.90	$1.29	10	120
ED777XPLWE	Powerpoint coverplate 2 gang with extra hole white	EA	$3.26	$0.33	10	120
ED777XPLUG	Powerpoint coverplate 2 gang with extra hole urban grey	EA	$6.38	$0.64	10	120
ED777XPLBL	Powerpoint coverplate 2 gang with extra hole black N	EA	$3.26	$0.33	10	120
ED777XPLMS	Powerpoint coverplate 2 gang with extra hole matt silver	EA	$6.25	$0.62	10	120
ED777XPLIC	Powerpoint coverplate 2 gang with extra hole ice	EA	$12.90	$1.29	10	120
ED777XPLDI	Powerpoint coverplate 2 gang with extra hole diesel	EA	$12.90	$1.29	10	120
ED777APLWE	Powerpoint coverplate 2 gang autoswitch white	EA	$3.26	$0.33	10	120
	Vertical powerpoints - single and double					
EDV787PLWE	Powerpoint coverplate 1 gang white	EA	$3.26	$0.33	10	120
EDV787PLUG	Powerpoint coverplate 1 gang urban grey	EA	$6.38	$0.64	10	120
EDV787PLBL	Powerpoint coverplate 1 gang black N	EA	$3.26	$0.33	10	120
EDV787PLMS	Powerpoint coverplate 1 gang matt silver	EA	$6.25	$0.62	10	120
EDV787PLIC	Powerpoint coverplate 1 gang ice	EA	$12.90	$1.29	10	120
EDV787PLDI	Powerpoint coverplate 1 gang diesel	EA	$12.90	$1.29	10	120
EDV777APLUG	Powerpoint coverplate 2 gang autoswitch urban grey	EA	$6.38	$0.64	10	120
EDV777APLWE	Powerpoint coverplate 2 gang autoswitch white	EA	$3.26	$0.33	10	120
EDV777PLWE	Powerpoint coverplate 2 gang white	EA	$3.26	$0.33	10	120
EDV777PLUG	Powerpoint coverplate 2 gang urban grey	EA	$6.38	$0.64	10	120
EDV777PLBL	Powerpoint coverplate 2 gang black N	EA	$3.26	$0.33	10	120
EDV777PLMS	Powerpoint coverplate 2 gang matt silver	EA	$6.25	$0.62	10	120
EDV777PLIC	Powerpoint coverplate 2 gang ice	EA	$12.90	$1.29	10	120

N New product | ECO Energy Saving products | More info available. See technical pages | COMING SOON Coming soon | Product to be discontinued

Whilst most items are stock lines some products are made to order. UoM = Unit Of Measure.
Prices are effective 1 June 2017 and are subject to change without notice. Trade prices exclude GST.

Excel Life – dedicated plate series

Coverplates

EDV777XPLMS

EDV777XPLDI

ED920PLWE

ED920PLBL

EDCWPLWE

Cat.Nos	Powerpoint coverplates	UoM	Trade price $	GST $	Box qty	Carton qty
	Vertical powerpoints - double and extra hole					
EDV777PLDI	Powerpoint coverplate 2 gang diesel	EA	$12.90	$1.29	10	120
EDV777XPLWE	Powerpoint coverplate 2 gang with extra hole white	EA	$3.26	$0.33	10	120
EDV777XPLUG	Powerpoint coverplate 2 gang with extra hole urban grey	EA	$6.38	$0.64	10	120
EDV777XPLBL	Powerpoint coverplate 2 gang with extra hole black N	EA	$3.26	$0.33	10	120
EDV777XPLMS	Powerpoint coverplate 2 gang with extra hole matt silver	EA	$6.25	$0.62	10	120
EDV777XPLIC	Powerpoint coverplate 2 gang with extra hole ice	EA	$12.90	$1.29	10	120
EDV777XPLDI	Powerpoint coverplate 2 gang with extra hole diesel	EA	$12.90	$1.29	10	120
	Coverplates for Arteor mechanisms					
ED920PLWE	Coverplate for 2 x 22.5x45mm modules white	EA	$3.26	$0.33	10	120
ED920PLUG	Coverplate for 2 x 22.5x45mm modules urban grey	EA	$6.38	$0.64	10	120
ED920PLBL	Coverplate for 2 x 22.5x45mm modules black N	EA	$3.26	$0.33	10	120
ED920PLMS	Coverplate for 2 x 22.5x45mm modules matt silver	EA	$6.25	$0.62	10	120
ED920PLIC	Coverplate for 2 x 22.5x45mm modules ice	EA	$12.90	$1.29	10	120
	Coverplates for 25x57mm Excel Life inserts					
EDCWPLWE	Coverplate for 3x 25x57mm or 1 x 25x57mm + 1x 50x57mm inserts white	EA	$3.26	$0.33	10	120
EDCWPLUG	Coverplate for 3x 25x57mm or 1 x 25x57mm + 1x 50x57mm inserts urban grey	EA	$6.38	$0.64	10	120
EDCWPLBL	Coverplate for 3x 25x57mm or 1 x 25x57mm + 1x 50x57mm inserts black N	EA	$3.26	$0.33	10	120
EDCWPLMS	Coverplate for 3x 25x57mm or 1 x 25x57mm + 1x 50x57mm inserts matt silver	EA	$6.25	$0.62	10	120
EDCWPLDI	Coverplate for 3x 25x57mm or 1 x 25x57mm + 1x 50x57mm inserts diesel	EA	$12.90	$1.29	10	120
EDCWPLIC	Coverplate for 3x 25x57mm or 1 x 25x57mm + 1x 50x57mm inserts ice	EA	$12.90	$1.29	10	120

N New product | ECO Energy Saving products | More info available. See technical pages | COMING SOON Coming soon | Product to be discontinued

Whilst most items are stock lines some products are made to order. UoM = Unit Of Measure.
Prices are effective 1 June 2017 and are subject to change without notice. Trade prices exclude GST.

Excel Life – common plate series

Switches & data, audio and video sockets

EC770/1WE

EC770/3WE

EC770/40DPCTPWE

EC770/1HIPWE

EC770/2HIPWE

EC920VGAWE

Cat.Nos	Vertical switches	UoM	Trade price $	GST $	Box qty	Carton qty
	Rocker switches - Single Pole Double Throw (SPDT)					
EC770/1WE	Switch 1 gang 16AX 240V a.c. white	EA	$8.53	$0.85	10	120
EC770/2WE	Switch 2 gang 16AX 240V a.c. white	EA	$13.77	$1.38	10	120
EC770/3WE	Switch 3 gang 16AX 240V a.c. white	EA	$26.15	$2.62	10	120
EC770/4WE	Switch 4 gang 16AX 240V a.c. white	EA	$40.78	$4.08	10	120
EC770/5WE	Switch 5 gang 16AX 240V a.c. white	EA	$57.61	$5.76	10	120
EC770/6WE	Switch 6 gang 16AX 240V a.c. white	EA	$67.78	$6.78	10	120
EC770/40WE	Switch 1 gang 40A 240V a.c. white	EA	$24.69	$2.47	10	120
EC770/40DPWE	Switch 1 gang double pole 40A 240V a.c. white	EA	$36.08	$3.61	10	120
EC770/40DPCTPWE	Switch 1 gang double pole 40A 240V a.c. "Cooktop" engraved white	EA	$40.73	$4.07	10	120
	Weatherproof IP66 rocker switches- Single Pole Double Throw (SPDT)					
EC770/1IPWE	Switch 1 gang IP66 16AX 240V a.c. white	EA	$29.91	$2.99	6	72
EC770/2IPWE	Switch 2 gang IP66 16AX 240V a.c. white	EA	$40.82	$4.08	6	72
	Horizontal switches					
	Weatherproof IP66 rocker switches - Single Pole Double Throw (SPDT)					
EC770/1HIPWE	Switch 1 gang IP66 16AX 240V a.c. white	EA	$29.91	$2.99	6	72
EC770/2HIPWE	Switch 2 gang IP66 16AX 240V a.c. white	EA	$40.82	$4.08	6	72
	Data, audio & video sockets					
	Audio outlets					
EC910J35WE	Audio outlet female 3.5mm white	EA	$36.14	$3.61	6	72
	HDMI outlets					
EC920HDMIWE	HDMI socket white	EA	$44.01	$4.40	4	48
	Speaker outlets					
EC920LJWE	Loudspeaker outlet white	EA	$36.14	$3.61	8	96
	S-video outlets					
EC920MSVIDWE	Video outlet S-video white	EA	$31.33	$3.13	10	120
	USB dual charger outlets					
EC920USB2WE	Dual USB charger 1.5A white	EA	$51.10	$5.11	3	36
	USB outlets					
ECUSBWE	USB outlet Type A white	EA	$40.30	$4.03	6	72
	VGA outlets					
EC920VGAWE	VGA outlet white	EA	$45.78	$4.58	10	120

N New product | ECO Energy Saving products | More info available. See technical pages | COMING SOON Coming soon | Product to be discontinued

Whilst most items are stock lines some products are made to order. UoM = Unit Of Measure.
Prices are effective 1 June 2017 and are subject to change without notice. Trade prices exclude GST.

Excel Life – common plate series

Switches

EC924WE

EC914WE

EC510WE

EC919WE

EC923TWE

EC571WE

Cat.Nos	Electronic devices	UoM	Trade price $	GST $	Box qty	Carton qty
	Buzzer					
EC917WE	Buzzer 1 gang 240V a.c. 80dB at 1m white	EA	$34.68	$3.47	10	120
	Bell					
EC918WE	Bell electronic 1 gang 12-48V a.c. 80dB at 1m white	EA	$132.55	$13.26	6	72
	Call indicator					
EC924WE	Corridor call indicator 1 gang 6A 240V a.c. white	EA	$79.52	$7.95	6	72
EC925WE	Guest room call control 2 gang 6A 240V a.c. white	EA	$45.78	$4.58	8	96
	Emergency stop					
EC915WE	Switch 1/4 turn 1 gang 3AX 240V a.c. white	EA	$28.92	$2.89	4	48
	No contact switches					
EC914WE	No touch switch 1 gang 4A 240V a.c. white	EA	$170.12	$17.01	6	72
	Sensor lights					
EC510WE	Skirting light permanent ON 0.2-1W 240V a.c. white	EA	$55.43	$5.54	6	72
EC511WE	Skirting light with PIR sensor 1.3W 240V a.c. white	EA	$265.07	$26.51	4	48
	Roller blinds control switches					
EC919WE	Roller blind switch push button 1 gang via relay 6A 240V a.c. white	EA	$45.78	$4.58	8	96
EC920WE	Roller blind switch push button 1 gang direct control 240V a.c. white	EA	$45.78	$4.58	8	96
	Thermostat switches					
EC921WE	Thermostat rotary 1 gang 5-30°C 16A 240V a.c. white	EA	$170.88	$17.09	10	120
	Time delay switches					
EC923TWE	Timer 8 weekly programs 1 gang 10A 240V a.c. 20hr reserve white LCD screen	EA	$110.97	$11.10	6	72
	Signal & bulkhead lights					
EC520WE	Signal light white LED 1W 240V a.c. white	EA	$45.78	$4.58	6	72
EC521WE	Signal light blue LED 1W 240V a.c. white	EA	$36.14	$3.61	6	72
EC524WE	Signal light red/green LED 1W 240V a.c. white	EA	$40.97	$4.10	6	72
EC570WE	Bulkhead light red LED 240V a.c. white	EA	$40.97	$4.10	4	48
EC571WE	Bulkhead light white LED 240V a.c. white	EA	$40.97	$4.10	4	48
EC572WE	Bulkhead light green LED 240V a.c. white	EA	$40.97	$4.10	4	48
EC573WE	Bulkhead light blue LED 240V a.c. white	EA	$40.97	$4.10	4	48

N New product | ECO Energy Saving products | More info available. See technical pages | COMING SOON Coming soon | Product to be discontinued

Whilst most items are stock lines some products are made to order. UoM = Unit Of Measure.
Prices are effective 1 June 2017 and are subject to change without notice. Trade prices exclude GST.

Excel Life – common plate series

Switches & Wireless Charging

EC20A/4KTWE

ECKFSWE

ECEL10N2WE

Cat.Nos	Hospitality	UoM	Trade price $	GST $	Box qty	Carton qty
	Keycard switches					
EC20A/4KTWE	Keycard switch 1 gang 4 x 20A 240V a.c. 85x54mm cards white	EA	$173.13	$17.31	5	60
	Keyfob switches					
ECKFSWE	Key fob switch 30s time delay 1 gang 240V a.c. white	EA	$83.63	$8.36	4	48
	RCD protected switches					
ECEL10N2WE	Switch 1 gang RCD 10mA 20A 240V a.c. white	EA	$208.35	$20.84	4	-
	Wireless Charging - Induction					
	Wall mount wireless charging station Type A USB port					
EDWCWEMS	Wireless charger 1A with Type A USB port 2.4A silver COMING SOON	EA	$92.90	$9.30	1	10
	Tamper-proof outdoor wireless charger					
077599	Wireless charger 1A IK08-IP66 (80051 to be used for mounting) COMING SOON	EA	$112.90	$11.30	1	10
	Table top mount wireless charger pad					
077580	Wireless charging pad 1A IK04-IP4 80mm cut-out (supplied with 2.5mm micro USB/USB cord for supply) COMING SOON	EA	$57.00	$5.70	1	10

N New product | ECO Energy Saving products | More info available. See technical pages | COMING SOON Coming soon | Product to be discontinued

Whilst most items are stock lines some products are made to order. UoM = Unit Of Measure.
Prices are effective 1 June 2017 and are subject to change without notice. Trade prices exclude GST.

Excel Life – common plate series

Powerpoints

EC787WE

EC787/2XWE

EC787/15WE

EC777WE

EC777/15WE

EC777USB2IWE

Cat.Nos	Horizontal powerpoints	UoM	Trade price $	GST $	Box qty	Carton qty
	Single powerpoints					
EC787WE	Powerpoint 1 gang 10A 240V a.c. white	EA	$11.33	$1.13	10	120
EC787XWE	Powerpoint 1 gang 10A 240V a.c. with extra hole white	EA	$21.48	$2.15	10	120
EC787/2XWE	Powerpoint 1 gang 10A 240V a.c. with 2 extra holes white	EA	$24.41	$2.44	10	120
EC787AWE	Powerpoint 1 gang 10A 240V a.c. autoswitch white	EA	$12.39	$1.24	10	120
EC787RWE	Powerpoint 1 gang 10A 240V a.c. with round earth white	EA	$51.64	$5.16	10	120
EC787ARWE	Powerpoint 1 gang 10A 240V a.c. autoswitch with round earth white	EA	$49.66	$4.97	10	120
EC787DPWE	Powerpoint 1 gang double pole 10A 240V a.c. white	EA	$32.02	$3.20	10	120
EC787/15WE	Powerpoint 1 gang 15A 240V a.c. white	EA	$22.75	$2.28	10	120
EC787/15XWE	Powerpoint 1 gang 15A 240V a.c. with extra hole white	EA	$28.38	$2.84	10	120
EC787A/15WE	Powerpoint 1 gang 15A 240V a.c. autoswitch white	EA	$25.70	$2.57	10	120
EC787/15DPWE	Powerpoint 1 gang double pole 15A 240V a.c. white	EA	$56.32	$5.63	10	120
EC787/20WE	Powerpoint 1 gang 20A 240V a.c. white	EA	$32.68	$3.27	10	120
EC787/25WE	Powerpoint 1 gang 25A 240V a.c. white	EA	$46.41	$4.64	10	120
EC787U/32WE	Powerpoint 1 gang 32A 240V a.c. unswitched white N	EA	$51.95	$5.20	10	120
	Double powerpoints					
EC777WE	Powerpoint 2 gang 10A 240V a.c. white	EA	$17.46	$1.75	10	120
EC777XWE	Powerpoint 2 gang 10A 240V a.c. with extra hole white	EA	$34.38	$3.44	10	120
EC777AWE	Powerpoint 2 gang 10A 240V a.c. autoswitch white	EA	$18.95	$1.90	10	120
EC777RWE	Powerpoint 2 gang 10A 240V a.c. with round earth white	EA	$69.48	$6.95	10	120
EC777DPWE	Powerpoint 2 gang double pole 10A 240V a.c. white	EA	$49.23	$4.92	10	120
EC777/15WE	Powerpoint 2 gang 15A 240V a.c. white	EA	$69.37	$6.94	10	120
EC777/15XWE	Powerpoint 2 gang 15A 240V a.c. with extra hole white	EA	$61.91	$6.19	10	120
EC777/15DPWE	Powerpoint 2 gang double pole 15A 240V a.c. with 2 extra holes white	EA	$90.89	$9.09	10	120
	Double powerpoint with integrated USB charger for wall boxes and brick wall installations - Dual type A					
EC777USB2IWE	Powerpoint 2 gang 10A 240V a.c. with integrated USB charger 2.4A white N	EA	$65.58	$6.56	6	-

N New product | ECO Energy Saving products | More info available. See technical pages | COMING SOON Coming soon | Product to be discontinued

Whilst most items are stock lines some products are made to order. UoM = Unit Of Measure.
Prices are effective 1 June 2017 and are subject to change without notice. Trade prices exclude GST.

Excel Life – common plate series

Powerpoints

ECV787WE

ECV787XWE

ECV787/2XWE

ECV777WE

EC798WE

Cat.Nos	Vertical powerpoints	UoM	Trade price $	GST $	Box qty	Carton qty
	Single powerpoints					
ECV787WE	Powerpoint 1 gang 10A 240V a.c. white	EA	$19.22	$1.92	10	120
ECV787XWE	Powerpoint 1 gang 10A 240V a.c. with extra hole white	EA	$37.53	$3.75	10	120
ECV787/2XWE	Powerpoint 1 gang 10A 240V a.c. with 2 extra holes white	EA	$45.26	$4.53	10	120
ECV787RWE	Powerpoint 1 gang 10A 240V a.c. with round earth white	EA	$62.06	$6.21	10	120
ECV787ARWE	Powerpoint 1 gang 10A 240V a.c. autoswitch with round earth white	EA	$62.06	$6.21	10	120
ECV787/15WE	Powerpoint 1 gang 15A 240V a.c. white	EA	$39.86	$3.99	10	120
ECV787A/15WE	Powerpoint 1 gang 15A 240V a.c. autoswitch white	EA	$39.86	$3.99	10	120
	Double powerpoints					
ECV777WE	Powerpoint 2 gang 10A 240V a.c. white	EA	$30.76	$3.08	10	120
ECV777XWE	Powerpoint 2 gang 10A 240V a.c. with extra hole white	EA	$57.10	$5.71	10	120
ECV777AWE	Powerpoint 2 gang 10A 240V a.c. autoswitch white	EA	$30.76	$3.08	10	120
	Shaver outlets					
EC798WE	Shaver outlet 10A 115/240V a.c. white	EA	$179.70	$17.97	2	16

N New product | ECO Energy Saving products | More info available. See technical pages | COMING SOON Coming soon | Product to be discontinued

Whilst most items are stock lines some products are made to order. UoM = Unit Of Measure.
Prices are effective 1 June 2017 and are subject to change without notice. Trade prices exclude GST.

Excel Life – common plate series

Grids & plates

ECFRAME

EC770/1GPLWE

EC770/2GPLWE

EC770/0GPLWE

EC920GPLWE

ECCWGPLWE

Cat.Nos	Grids	UoM	Trade price $	GST $	Box qty	Carton qty
	Mounting frame					
ECFRAME	Grid for 3x 25x57mm or 1x 25x57mm + 1x 50x27mm inserts white	EA	$1.77	$0.18	10	120
	Grid & plates					
	For EM series mechanisms					
EC770/1GPLWE	Switch grid & plate 1 gang white	EA	$4.49	$0.45	10	120
EC770/2GPLWE	Switch grid & plate 2 gang white	EA	$4.49	$0.45	10	120
EC770/3GPLWE	Switch grid & plate 3 gang white	EA	$4.49	$0.45	10	120
EC770/4GPLWE	Switch grid & plate 4 gang white	EA	$7.85	$0.78	10	120
EC770/5GPLWE	Switch grid & plate 5 gang white	EA	$7.85	$0.78	10	120
EC770/6GPLWE	Switch grid & plate 6 gang white	EA	$7.85	$0.78	10	120
EC770/0GPLWE	Switch grid & plate blank white	EA	$4.49	$0.45	10	120
	For inserts					
EC910GPLWE	Grid & plate for 1x 57x25mm insert white	EA	$4.80	$0.48	10	120
EC920GPLWE	Grid & plate for 1x 45x45mm or 2x 22.5x45mm inserts white	EA	$4.49	$0.45	10	120
	Deep mounting block					
ECCWGPLWE	Deep mounting block & coverplate plastic white	EA	$6.77	$0.68	10	120

N New product | ECO Energy Saving products | More info available. See technical pages | COMING SOON Coming soon | Product to be discontinued

Whilst most items are stock lines some products are made to order. UoM = Unit Of Measure.
Prices are effective 1 June 2017 and are subject to change without notice. Trade prices exclude GST.

Excel Life – common plate series

Coverplates

ECCWPLWE

ECCW2WPLWE

ECCW3WPLWE

ECCW2HPLWE

ECCW3HPLWE

ECCW4HPLWE

Cat.Nos	Horizontal outlets coverplates	UoM	Trade price $	GST $	Box qty	Carton qty
ECCWPLWE	Coverplate 1 horizontal outlet white	EA	$3.26	$0.33	10	120
ECCW2WPLWE	Coverplate 2 horizontal outlets mulitpanel white	EA	$7.23	$0.72	10	120
ECCW3WPLWE	Coverplate 3 horizontal outlets mulitpanel white	EA	$10.78	$1.08	10	120
	Vertical outlets coverplates					
ECCW2HPLWE	Coverplate 2 vertical outlets mulitpanel white	EA	$7.23	$0.72	10	-
ECCW3HPLWE	Coverplate 3 vertical outlets mulitpanel white	EA	$10.78	$1.08	10	-
ECCW4HPLWE	Coverplate 4 vertical outlets mulitpanel white	EA	$15.73	$1.57	10	-

N New product | ECO Energy Saving products | More info available. See technical pages | COMING SOON Coming soon | Product to be discontinued

Whilst most items are stock lines some products are made to order. UoM = Unit Of Measure.
Prices are effective 1 June 2017 and are subject to change without notice. Trade prices exclude GST.

Excel Life – secure plate series

Powerpoints, grid & plates, coverplates

ES777WE

ES770/1GPLWE

ES770/2GPLWE

ES770/3GPLWE

ESCWPLWE

ESCWPLWE
locking screw

Cat.Nos	Horizontal powerpoints	UoM	Trade price $	GST $	Box qty	Carton qty
	Single powerpoints					
ES787WE	Powerpoint 1 gang 10A 240V a.c. secure plate white	EA	$12.39	$1.24	10	120
	Double powerpoints					
ES777WE	Powerpoint 2 gang 10A 240V a.c. secure plate white	EA	$19.84	$1.98	10	120
	Grid & plates					
ES770/1GPLWE	Grid & plate 1 gang white	EA	$4.49	$0.45	10	120
ES770/2GPLWE	Grid & plate 2 gang white	EA	$4.49	$0.45	10	120
ES770/3GPLWE	Grid & plate 3 gang white	EA	$4.49	$0.45	10	120
ES770/4GPLWE	Grid & plate 4 gang white	EA	$7.85	$0.78	10	120
ES770/5GPLWE	Grid & plate 5 gang white	EA	$7.85	$0.78	10	120
ES770/6GPLWE	Grid & plate 6 gang white	EA	$7.85	$0.78	10	120
ES770/0GPLWE	Grid & plate blank white	EA	$4.49	$0.45	10	120
	Coverplates					
ESCWPLWE	Coverplate secure series white	EA	$4.16	$0.42	10	120

N New product | ECO Energy Saving products | More info available. See technical pages | COMING SOON Coming soon | Product to be discontinued

Whilst most items are stock lines some products are made to order. UoM = Unit Of Measure.
Prices are effective 1 June 2017 and are subject to change without notice. Trade prices exclude GST.

Excel Life

EM series mechanisms

EM770WE

EM770IMWE

EM770DUOWE

EM883WE

EM800SLAVEWE

EMELVWE

Cat.Nos	Switch mechanisms	UoM	Trade price $	GST $	Box qty	Carton qty
	Rocker switch mechanisms					
EM770WE	Switch mech. 2 way 16AX 240V a.c. white	EA	$7.31	$0.73	10	120
EM770UG	Switch mech. 2 way 16AX 240V a.c. urban grey	EA	$10.43	$1.04	10	120
EM770BL	Switch mech. 2 way 16AX 240V a.c. black N	EA	$7.31	$0.73	10	120
EM770IMWE	Switch mech. intermediate 2 way 16A 240V a.c. white	EA	$37.29	$3.73	10	120
EM770IMUG	Switch mech. intermediate 2 way 16A 240V a.c. urban grey	EA	$40.41	$4.04	10	120
EM770IMBL	Switch mech. intermediate 2 way 16A 240V a.c. black N	EA	$37.29	$3.73	10	120
EM770IMLEDWE	Switch mech. intermediate 2 way 16A 240V a.c. with LED white	EA	$41.05	$4.10	10	120
EM770DUOWE	Switch mech. 1 way duo 16A 10AX 240V a.c. white	EA	$18.23	$1.82	10	120
EM770DUOUG	Switch mech. 1 way duo 16A 10AX 240V a.c. urban grey	EA	$21.35	$2.14	10	120
EM770RDWE	Switch mech. 2 way 16A 16AX 240V a.c. with red dot white	EA	$9.88	$0.99	10	120
EM770RDUG	Switch mech. 2 way 16A 16AX 240V a.c. with red dot urban grey	EA	$13.00	$1.30	10	120
EM770/20WE	Switch mech. 2 way 20A 20AX 240V a.c. white	EA	$19.47	$1.95	10	120
EM770/20UG	Switch mech. 2 way 20A 20AX 240V a.c. urban grey	EA	$22.59	$2.26	10	120
EM770/20BL	Switch mech. 2 way 20A 20AX 240V a.c. black N	EA	$19.47	$1.95	10	120
EM770/20RDWE	Switch mech. 2 way 20A 20AX 240V a.c. with red dot white	EA	$22.03	$2.20	10	120
EM770/20RDUG	Switch mech. 2 way 20A 20AX 240V a.c. with red dot urban grey	EA	$25.15	$2.52	10	120
EM770/25WE	Switch mech. 1 way 25A 20AX 240V a.c. white	EA	$19.95	$2.00	10	120
EM770/25UG	Switch mech. 1 way 25A 20AX 240V a.c. urban grey	EA	$23.07	$2.31	10	120
EM770/32WE	Switch mech. 1 way 32A 20AX 240V a.c. white	EA	$20.33	$2.03	10	120
EM770/32UG	Switch mech. 1 way 32A 20AX 240V a.c. urban grey	EA	$23.45	$2.34	10	120
EM770/32BL	Switch mech. 1 way 32A 20AX 240V a.c. black N	EA	$20.33	$2.03	10	120
	Push-button mechanisms					
EM883WE	Push-button 5A 240V a.c. white	EA	$49.32	$4.93	10	120
EM883UG	Push-button 5A 240V a.c. urban grey	EA	$52.45	$5.24	10	120
EM883BL	Push-button 5A 240V a.c. black N	EA	$49.32	$4.93	10	120
EM800SLAVEWE	Push-button secondary 5A 240V a.c. white	EA	$33.72	$3.37	10	120
EM800SLAVEUG	Push-button secondary 5A 240V a.c. urban grey	EA	$36.84	$3.68	10	120
EM800SLAVEBL	Push-button secondary 5A 240V a.c. black N	EA	$33.72	$3.37	10	120
EMELVWE	Push-button 50mA 12V d.c. white	EA	$31.97	$3.20	10	120
EMELVUG	Push-button 50mA 12V d.c. urban grey	EA	$35.09	$3.51	10	120
EMELVNWE	Push-button 50mA 12V d.c. with LED white	EA	$34.34	$3.43	10	120
EMELVNUG	Push-button 50mA 12V d.c. with LED urban grey	EA	$36.53	$3.65	10	120

N New product | ECO Energy Saving products | More info available. See technical pages | COMING SOON Coming soon | Product to be discontinued

Whilst most items are stock lines some products are made to order. UoM = Unit Of Measure.
Prices are effective 1 June 2017 and are subject to change without notice. Trade prices exclude GST.

Excel Life

EM series mechanisms

EMRSWE

EM770XUG

EM770XBL

EM770AUTOMANWE

EM770BED1UG

Cat.Nos	Switch mechanisms	UoM	Trade price $	GST $	Box qty	Carton qty
	Rotary switch mechanisms					
EMRSWE	Rotary 16A 240V a.c. with 6 marking plates options white	EA	$11.89	$1.19	10	120
EMRSUG	Rotary 16A 240V a.c. with 6 marking plates options urban grey	EA	$15.01	$1.50	10	120
EMRSBL	Rotary 16A 240V a.c. with 6 marking plate options black N	EA	$11.89	$1.19	10	120
	Spring return switch mechanisms					
EM770XWE	Switch mech. spring return 2 way 16A 240V a.c. white	EA	$8.09	$0.81	10	120
EM770XUG	Switch mech. spring return 2 way 16A 240V a.c. urban grey	EA	$11.21	$1.12	10	120
EM770XBL	Switch mech. spring return 2 way 16A 240V a.c. black N	EA	$8.09	$0.81	10	120
EM770XDOORWE	Switch mech. spring return 2 way 16A 240V a.c. "DOOR" engraved white	EA	$12.72	$1.27	10	120
EM770XDOORUG	Switch mech. spring return 2 way 16A 240V a.c. "DOOR" engraved urban grey	EA	$15.84	$1.58	10	120
EM770XDOORBL	Switch mech. Spring return 2 way 16A 240V a.c. "DOOR" engraved black N	EA	$12.72	$1.27	10	120
EM770XPRESSWE	Switch mech. spring return 2 way 16A 240V a.c. "PRESS" engraved white	EA	$12.72	$1.27	10	120
EM770XPRESSUG	Switch mech. spring return 2 way 16A 240V a.c. "PRESS" engraved urban grey	EA	$15.84	$1.58	10	120
EM770XPRESSBL	Switch mech. Spring return 2 way 16A 240V a.c. "PRESS" engraved black N	EA	$12.72	$1.27	10	120
EM770XRESETWE	Switch mech. spring return 2 way 16A 240V a.c. "RESET" engraved white	EA	$12.72	$1.27	10	120
EM770XRESETUG	Switch mech. spring return 2 way 16A 240V a.c. "RESET" engraved urban grey	EA	$15.84	$1.58	10	120
	Double-pole switch mechanisms					
EM770DPWE	Switch mech. 1 way double-pole 16A 10AX 240V a.c. white	EA	$26.13	$2.61	10	120
EM770DPUG	Switch mech. 1 way double-pole 16A 10AX 240V a.c. urban grey	EA	$29.25	$2.92	10	120
EM770DPBL	Switch mech. 1 way double-pole 16A 10AX 240V a.c. black N	EA	$26.13	$2.61	10	120
EM770DPRDWE	Switch mech. 1 way double-pole 16A 10AX 240V a.c. with red dot white	EA	$29.20	$2.92	10	120
EM770DPRDUG	Switch mech. 1 way double-pole 16A 10AX 240V a.c. with red dot urban grey	EA	$32.32	$3.23	10	120
EM770/20DPWE	Switch mech. 1 way double-pole 20A 10AX 240V a.c. white	EA	$42.62	$4.26	10	120
EM770/20DPUG	Switch mech. 1 way double-pole 20A 10AX 240V a.c. urban grey	EA	$45.74	$4.57	10	120
EM770/20DPENGWE	Switch mech. 1 way double-pole 20A 10AX 240V a.c. engraved white	EA	$43.73	$4.37	10	120
EM770/20DPENGUG	Switch mech. 1 way double-pole 20A 10AX 240V a.c. engraved urban grey N	EA	$46.36	$4.64	10	120

N New product | ECO Energy Saving products | More info available. See technical pages | COMING SOON Coming soon | Product to be discontinued

Whilst most items are stock lines some products are made to order. UoM = Unit Of Measure.
Prices are effective 1 June 2017 and are subject to change without notice. Trade prices exclude GST.

Excel Life

EM series mechanisms

EM770BED1WE

EM770AIRCONWE

EM770BYPASSWE

EM770DAYNIGHTWE

Cat.Nos	Switch mechanisms	UoM	Trade price $	GST $	Box qty	Carton qty
	Engraved rocker mechanisms					
EM770AIRCONWE	Switch mech. 2 way 16AX 240V a.c. "AIR CON" engraved white	EA	$11.96	$1.20	10	120
EM770AIRCONUG	Switch mech. 2 way 16AX 240V a.c. "AIR CON" engraved urban grey	EA	$15.08	$1.51	10	120
EM770AIRCONBL	Switch mech. 2 way 16AX 240V a.c. "AIR CON" engraved black N	EA	$11.96	$1.20	10	120
EM770AUTOMANWE	Switch mech. 2 way 16AX 240V a.c. "AUTO/MAN" engraved white	EA	$11.96	$1.20	10	120
EM770AUTOMANUG	Switch mech. 2 way 16AX 240V a.c. "AUTO/MAN" engraved urban grey	EA	$15.08	$1.51	10	120
EM770AUTOMANBL	Switch mech. 2 way 16AX 240V a.c. "AUTO/MAN" engraved black N	EA	$11.96	$1.20	10	120
EM770BED1WE	Switch mech. 2 way 16AX 240V a.c. "BED1" engraved white	EA	$11.96	$1.20	10	120
EM770BED1UG	Switch mech. 2 way 16AX 240V a.c. "BED1" engraved urban grey	EA	$15.08	$1.51	10	120
EM770BED2WE	Switch mech. 2 way 16AX 240V a.c. "BED2" engraved white	EA	$11.96	$1.20	10	120
EM770BED2UG	Switch mech. 2 way 16AX 240V a.c. "BED2" engraved urban grey	EA	$15.08	$1.51	10	120
EM770BED3WE	Switch mech. 2 way 16AX 240V a.c. "BED3" engraved white	EA	$11.96	$1.20	10	120
EM770BED3UG	Switch mech. 2 way 16AX 240V a.c. "BED3" engraved urban grey	EA	$15.08	$1.51	10	120
EM770BED4WE	Switch mech. 2 way 16AX 240V a.c. "BED4" engraved white	EA	$11.96	$1.20	10	120
EM770BED4UG	Switch mech. 2 way 16AX 240V a.c. "BED4" engraved urban grey	EA	$15.08	$1.51	10	120
EM770BYPASSWE	Switch mech. 2 way 16AX 240V a.c. "BYPASS" engraved white	EA	$11.96	$1.20	10	120
EM770BYPASSUG	Switch mech. 2 way 16AX 240V a.c. "BYPASS" engraved urban grey	EA	$15.08	$1.51	10	120
EM770DAYNIGHTWE	Switch mech. 2 way 16AX 240V a.c. "DAY NIGHT" engraved white	EA	$11.96	$1.20	10	120
EM770DAYNIGHTUG	Switch mech. 2 way 16AX 240V a.c. "DAY NIGHT" engraved urban grey	EA	$15.08	$1.51	10	120
EM770DININGWE	Switch mech. 2 way 16AX 240V a.c. "DINING" engraved white	EA	$11.96	$1.20	10	120
EM770DININGUG	Switch mech. 2 way 16AX 240V a.c. "DINING" engraved urban grey	EA	$15.08	$1.51	10	120
EM770DININGBL	Switch mech. 2 way 16AX 240V a.c. "DINING" engraved black N	EA	$11.96	$1.20	10	120
EM770DUOHTWE	Switch mech. 1 way duo 16AX 240V a.c. "HEAT" engraved white	EA	$22.87	$2.29	10	120
EM770DUOHTUG	Switch mech. 1 way duo 16AX 240V a.c. "HEAT" engraved urban grey	EA	$25.99	$2.60	10	120
EM770DWASHWE	Switch mech. 2 way 16AX 240V a.c. "D/WASH" engraved white	EA	$11.96	$1.20	10	120
EM770DWASHUG	Switch mech. 2 way 16AX 240V a.c. "D/WASH" engraved urban grey	EA	$15.08	$1.51	10	120
EM770DWASHBL	Switch mech. 2 way 16AX 240V a.c. "D/WASH" engraved black N	EA	$11.96	$1.20	10	120
EM770EXHWE	Switch mech. 2 way 16AX 240V a.c. "EXHAUST" engraved white	EA	$11.96	$1.20	10	120
EM770EXHUG	Switch mech. 2 way 16AX 240V a.c. "EXHAUST" engraved urban grey	EA	$15.08	$1.51	10	120
EM770FANWE	Switch mech. 2 way 16AX 240V a.c. "FAN" engraved white	EA	$11.96	$1.20	10	120
EM770FANUG	Switch mech. 2 way 16AX 240V a.c. "FAN" engraved urban grey	EA	$15.08	$1.51	10	120
EM770FANBL	Switch mech. 2 way 16AX 240V a.c. "FAN" engraved black N	EA	$11.96	$1.20	10	120
EM770FRIDGEWE	Switch mech. 2 way 16AX 240V a.c. "FRIDGE" engraved white	EA	$11.96	$1.20	10	120
EM770FRIDGEUG	Switch mech. 2 way 16AX 240V a.c. "FRIDGE" engraved urban grey	EA	$15.08	$1.51	10	120
EM770FRIDGEBL	Switch mech. 2 way 16AX 240V a.c. "FRIDGE" engraved black N	EA	$11.96	$1.20	10	120

N New product | ECO Energy Saving products | More info available. See technical pages | COMING SOON Coming soon | Product to be discontinued

Whilst most items are stock lines some products are made to order. UoM = Unit Of Measure.
Prices are effective 1 June 2017 and are subject to change without notice. Trade prices exclude GST.

Excel Life

EM series mechanisms

EM770LIGHTUG

EM770LOUNGEWE

EM770LIVINGWE

EM770MICROWAVWE

Cat.Nos	Switch mechanisms		UoM	Trade price $	GST $	Box qty	Carton qty
	Engraved rocker mechanisms						
EM770GAMESWE	Switch mech. 2 way 16AX 240V a.c. "GAMES" engraved white		EA	$11.96	$1.20	10	120
EM770GAMESUG	Switch mech. 2 way 16AX 240V a.c. "GAMES" engraved urban grey		EA	$15.08	$1.51	10	120
EM770HEATWE	Switch mech. 2 way 16AX 240V a.c. "HEAT" engraved white		EA	$11.96	$1.20	10	120
EM770HEATUG	Switch mech. 2 way 16AX 240V a.c. "HEAT" engraved urban grey		EA	$15.08	$1.51	10	120
EM770HEATBL	Switch mech. 2 way 16AX 240V a.c. "HEAT" engraved black	N	EA	$11.97	$1.20	10	120
EM770HOBWE	Switch mech. 2 way 16AX 240V a.c. "HOB" engraved white		EA	$11.96	$1.20	10	120
EM770HOBUG	Switch mech. 2 way 16AX 240V a.c. "HOB" engraved urban grey		EA	$15.08	$1.51	10	120
EM770HOODWE	Switch mech. 2 way 16AX 240V a.c. "HOOD" engraved white		EA	$11.96	$1.20	10	120
EM770HOODUG	Switch mech. 2 way 16AX 240V a.c. "HOOD" engraved urban grey		EA	$15.08	$1.51	10	120
EM770HOODBL	Switch mech. 2 way 16AX 240V a.c. "HOOD" engraved black	N	EA	$11.96	$1.20	10	120
EM770KITCHENWE	Switch mech. 2 way 16AX 240V a.c. "KITCHEN" engraved white		EA	$15.08	$1.51	10	120
EM770KITCHENUG	Switch mech. 2 way 16AX 240V a.c. "KITCHEN" engraved urban grey		EA	$11.96	$1.20	10	120
EM770KITCHENBL	Switch mech. 2 way 16AX 240V a.c. "KITCHEN" engraved black	N	EA	$11.96	$1.20	10	120
EM770LIGHTWE	Switch mech. 2 way 16AX 240V a.c. "LIGHT" engraved white		EA	$15.08	$1.51	10	120
EM770LIGHTUG	Switch mech. 2 way 16AX 240V a.c. "LIGHT" engraved urban grey		EA	$11.96	$1.20	10	120
EM770LIGHTBL	Switch mech. 2 way 16AX 240V a.c. "LIGHT" engraved black	N	EA	$11.96	$1.20	10	120
EM770LIVINGWE	Switch mech. 2 way 16AX 240V a.c. "LIVING" engraved white		EA	$15.08	$1.51	10	120
EM770LIVINGUG	Switch mech. 2 way 16AX 240V a.c. "LIVING" engraved urban grey		EA	$11.96	$1.20	10	120
EM770LIVINGBL	Switch mech. 2 way 16AX 240V a.c. "LIVING" engraved black	N	EA	$11.96	$1.20	10	120
EM770LOUNGEWE	Switch mech. 2 way 16AX 240V a.c. "LOUNGE" engraved white		EA	$15.08	$1.51	10	120
EM770LOUNGEUG	Switch mech. 2 way 16AX 240V a.c. "LOUNGE" engraved urban grey		EA	$11.96	$1.20	10	120
EM770LOUNGEBL	Switch mech. 2 way 16AX 240V a.c. "LOUNGE" engraved black	N	EA	$11.96	$1.20	10	120
EM770OUTSIDEWE	Switch mech. 2 way 16AX 240V a.c. "OUTSIDE" engraved white	N	EA	$15.08	$1.51	10	120
EM770OUTSIDEUG	Switch mech. 2 way 16AX 240V a.c. "OUTSIDE" engraved urban grey	N	EA	$11.96	$1.20	10	120
EM770OUTSIDEBL	Switch mech. 2 way 16AX 240V a.c. "OUTSIDE" engraved black	N	EA	$11.96	$1.20	10	120
EM770GARDENWE	Switch mech. 2 way 16AX 240V a.c. "GARDEN" engraved white	N	EA	$15.08	$1.51	10	120
EM770GARDENUG	Switch mech. 2 way 16AX 240V a.c. "GARDEN" engraved urban grey	N	EA	$11.96	$1.20	10	120
EM770GARDENBL	Switch mech. 2 way 16AX 240V a.c. "GARDEN" engraved black	N	EA	$11.96	$1.20	10	120
EM770TVWE	Switch mech. 2 way 16AX 240V a.c. "TV" engraved white	N	EA	$15.08	$1.51	10	120
EM770TVUG	Switch mech. 2 way 16AX 240V a.c. "TV" engraved urban grey	N	EA	$11.96	$1.20	10	120
EM770TVBL	Switch mech. 2 way 16AX 240V a.c. "TV" engraved black	N	EA	$11.96	$1.20	10	120
EM770MIRRORWE	Switch mech. 2 way 16AX 240V a.c. "MIRROR" engraved white	N	EA	$15.08	$1.51	10	120
EM770MIRRORUG	Switch mech. 2 way 16AX 240V a.c. "MIRROR" engraved urban grey	N	EA	$11.96	$1.20	10	120
EM770MIRRORBL	Switch mech. 2 way 16AX 240V a.c. "MIRROR" engraved black	N	EA	$11.49	$1.15	10	120

N New product | ECO Energy Saving products | More info available. See technical pages | COMING SOON Coming soon | Product to be discontinued

Whilst most items are stock lines some products are made to order. UoM = Unit Of Measure.
Prices are effective 1 June 2017 and are subject to change without notice. Trade prices exclude GST.

Excel Life

EM series mechanisms

EM770SENSORWE

EM770WASTEWE

EM770/20HWSWE

EM770/32OVENWE

EM770ZONE1WE

Cat.Nos	Switch mechanisms		UoM	Trade price $	GST $	Box qty	Carton qty
	Engraved rocker mechanisms						
EM770FIREWE	Switch mech. 2 way 16AX 240V a.c. "FIRE" engraved white	N	EA	$11.96	$1.20	10	120
EM770FIREUG	Switch mech. 2 way 16AX 240V a.c. "FIRE" engraved urban grey	N	EA	$15.08	$1.51	10	120
EM770FIREBL	Switch mech. 2 way 16AX 240V a.c. "FIRE" engraved black	N	EA	$11.96	$1.20	10	120
EM770MICROWAVWE	Switch mech. 2 way 16AX 240V a.c. "MICROWAVE" engraved white		EA	$11.96	$1.20	10	120
EM770MICROWAVUG	Switch mech. 2 way 16AX 240V a.c. "MICROWAVE" engraved urban grey		EA	$15.08	$1.51	10	120
EM770MICROWAVBL	Switch mech. 2 way 16AX 240V a.c. "MICROWAVE" engraved black	N	EA	$11.96	$1.20	10	120
EM770OFFICEWE	Switch mech. 2 way 16AX 240V a.c. "OFFICE" engraved white		EA	$11.96	$1.20	10	120
EM770OFFICEUG	Switch mech. 2 way 16AX 240V a.c. "OFFICE" engraved urban grey		EA	$15.08	$1.51	10	120
EM770OFFICEBL	Switch mech. 2 way 16AX 240V a.c. "OFFICE" engraved black	N	EA	$11.96	$1.20	10	120
EM770RUMPUSWE	Switch mech. 2 way 16AX 240V a.c. "RUMPUS" engraved white		EA	$11.96	$1.20	10	120
EM770RUMPUSUG	Switch mech. 2 way 16AX 240V a.c. "RUMPUS" engraved urban grey		EA	$15.08	$1.51	10	120
EM770SENSORWE	Switch mech. 2 way 16AX 240V a.c. "SENSOR" engraved white		EA	$11.96	$1.20	10	120
EM770SENSORUG	Switch mech. 2 way 16AX 240V a.c. "SENSOR" engraved urban grey		EA	$15.08	$1.51	10	120
EM770SENSORBL	Switch mech. 2 way 16AX 240V a.c. "SENSOR" engraved black	N	EA	$11.96	$1.20	10	120
EM770WASTEWE	Switch mech. 2 way 16AX 240V a.c. "WASTE" engraved white		EA	$11.96	$1.20	10	120
EM770WASTEUG	Switch mech. 2 way 16AX 240V a.c. "WASTE" engraved urban grey		EA	$15.08	$1.51	10	120
EM770WASTEBL	Switch mech. 2 way 16AX 240V a.c. "WASTE" engraved black	N	EA	$11.96	$1.20	10	120
EM770ZONE1WE	Switch mech. 2 way 16AX 240V a.c. "ZONE1" engraved white		EA	$11.96	$1.20	10	120
EM770ZONE1UG	Switch mech. 2 way 16AX 240V a.c. "ZONE1" engraved urban grey		EA	$15.08	$1.51	10	120
EM770ZONE2WE	Switch mech. 2 way 16AX 240V a.c. "ZONE2" engraved white		EA	$11.96	$1.20	10	120
EM770ZONE2UG	Switch mech. 2 way 16AX 240V a.c. "ZONE2" engraved urban grey		EA	$15.08	$1.51	10	120
EM770ZONE3WE	Switch mech. 2 way 16AX 240V a.c. "ZONE3" engraved white		EA	$11.96	$1.20	10	120
EM770ZONE3UG	Switch mech. 2 way 16AX 240V a.c. "ZONE3" engraved urban grey		EA	$15.08	$1.51	10	120
EM770ZONE4WE	Switch mech. 2 way 16AX 240V a.c. "ZONE4" engraved white		EA	$11.96	$1.20	10	120
EM770ZONE4UG	Switch mech. 2 way 16AX 240V a.c. "ZONE4" engraved urban grey		EA	$15.08	$1.51	10	120
EM770/20ACWE	Switch mech. 2 way 20A 240V a.c. "AIR CON" engraved white		EA	$24.12	$2.41	10	120
EM770/20ACUG	Switch mech. 2 way 20A 240V a.c. "AIR CON" engraved urban grey		EA	$27.24	$2.72	10	120
EM770/20HWSWE	Switch mech. 2 way 20A 240V a.c. "HWS" engraved white		EA	$24.12	$2.41	10	120
EM770/20HWSUG	Switch mech. 2 way 20A 240V a.c. "HWS" engraved urban grey		EA	$27.24	$2.72	10	120
EM770/32HOBWE	Switch mech. 1 way 32A 240V a.c. "HOB" engraved white		EA	$25.02	$2.50	10	120
EM770/32HOBUG	Switch mech. 1 way 32A 240V a.c. "HOB" engraved urban grey		EA	$28.14	$2.81	10	120
EM770/32HOBBL	Switch mech. 2 way 32A 240V a.c. "HOB" engraved black	N	EA	$25.02	$2.50	10	120
EM770/32HOTPWE	Switch mech. 1 way 32A 240V a.c. "HOT PLATE" engraved white		EA	$24.98	$2.50	10	120
EM770/32HOTPUG	Switch mech. 1 way 32A 240V a.c. "HOT PLATE" engraved urban grey		EA	$28.11	$2.81	10	120

N New product | ECO Energy Saving products | More info available. See technical pages | COMING SOON Coming soon | Product to be discontinued

Whilst most items are stock lines some products are made to order. UoM = Unit Of Measure.
Prices are effective 1 June 2017 and are subject to change without notice. Trade prices exclude GST.

Excel Life

EM series mechanisms

EM770PRINTWE

Cat.Nos	Switch mechanisms	UoM	Trade price $	GST $	Box qty	Carton qty
	Engraved rocker mechanisms					
EM770/32OVENWE	Switch mech. 1 way 32A 240V a.c. "OVEN" engraved white	EA	$24.98	$2.50	10	120
EM770/32OVENUG	Switch mech. 1 way 32A 240V a.c. "OVEN" engraved urban grey	EA	$28.11	$2.81	10	120
EM770/32OVENBL	Switch mech. 1 way 32A 240V a.c. "OVEN" engraved black N	EA	$25.02	$2.50	10	120
EM770/32RANGEWE	Switch mech. 1 way 32A 240V a.c. "RANGE" engraved white	EA	$25.02	$2.50	10	120
EM770/32RANGEUG	Switch mech. 1 way 32A 240V a.c. "RANGE" engraved urban grey	EA	$28.14	$2.81	10	120
EM770/32RANGEBL	Switch mech. 2 way 32A 240V a.c. "RANGE" engraved black N	EA	$25.02	$2.50	10	120
EM770/32RDWE	Switch mech. 1 way 32A 240V a.c. with red dot white	EA	$22.90	$2.29	10	120
EM770/32RDUG	Switch mech. 1 way 32A 240V a.c. with red dot urban grey	EA	$26.03	$2.60	10	120
EM770PRINTWE	Switch mech. 2 way 16AX 240V a.c. custom print white	EA	$12.78	$1.28	10	120
EM770PRINTUG	Switch mech. 2 way 16AX 240V a.c. custom print urban grey	EA	$15.91	$1.59	10	120
EM770PRINTBL	Switch mech. 2 way 16AX 240V a.c. custom print black	EA	$12.78	$1.28	10	120

Excel Life

EM series mechanisms

EM802TDWE

EM820BL1WE

EM820KLIOWE

EM770/20KT

EM787WE

EM787U/25WE

Cat.Nos	Switch mechanisms	UoM	Trade price $	GST $	Box qty	Carton qty
	Time delay push-button mechanisms					
EM802TDWE	Time delay mech. 400VA 240V a.c. 2 wire 1-10mn with 1mn steps white	EA	$78.32	$7.83	10	120
EM802TDUG	Time delay mech. 400VA 240V a.c. 2 wire 1-10mn with 1mn steps urban grey	EA	$81.45	$8.14	10	120
EM803TDWE	Time delay mech. 500VA 240V a.c. 3 wire 1-60mn with 5mn steps white	EA	$94.43	$9.44	10	120
EM803TDUG	Time delay mech. 500VA 240V a.c. 3 wire 1-60mn with 5mn steps urban grey	EA	$97.55	$9.76	10	120
	Bi-lock mechanisms					
EM820BL0WE	Bi-lock mech. 1 gang 16A 250V a.c. OFF removable only white	EA	$98.50	$9.85	10	120
EM820BL1WE	Bi-lock mech. 1 gang 16A 250V a.c. ON removable only white	EA	$98.50	$9.85	10	120
EM820BL10WE	Bi-lock mech. 1 gang 16A 250V a.c. ON/OFF removable white	EA	$98.50	$9.85	10	120
	Keylock mechanisms					
EM820KLIOWE	Keylock mech. 1 gang 20A 240V a.c. ON/OFF removable white	EA	$70.75	$7.08	10	120
EM820KLIOUG	Keylock mech. 1 gang 20A 240V a.c. ON/OFF removable urban grey	EA	$73.87	$7.39	10	120
EM820KLIWE	Keylock mech. 1 gang 20A 240V a.c. ON removable only white	EA	$70.75	$7.08	10	120
EM820KLIUG	Keylock mech. 1 gang 20A 240V a.c. ON removable only urban grey	EA	$73.87	$7.39	10	120
EM820KLOWE	Keylock mech. 1 gang 20A 240V a.c. OFF removable only white	EA	$70.75	$7.08	10	120
EM820KLOUG	Keylock mech. 1 gang 20A 240V a.c. OFF removable only urban grey	EA	$73.87	$7.39	10	120
	Keytag mechanisms					
EM20A/4KTWE	Keytag mech. single pole double throw 4 x 20A 240V a.c. white	EA	$166.51	$16.65	10	120
EM770/20KT	Keytag mech. single pole double throw 20A 240V a.c. white	EA	$18.82	$1.88	10	120
	Powerpoint mechanisms					
	Horizontal single powerpoint mechanisms					
EM787WE	Powerpoint mech. 1 gang 10A 240V a.c. white	EA	$12.39	$1.24	10	120
EM787AWE	Powerpoint mech. 1 gang 10A 240V a.c. autoswitch white	EA	$12.39	$1.24	10	120
EM787AUG	Powerpoint mech. 1 gang 10A 240V a.c. autoswitch urban grey	EA	$15.51	$1.55	10	120
EM787ARWE	Powerpoint mech. 1 gang 10A 240V a.c. autoswitch with round earth white	EA	$49.66	$4.97	10	120
EM787A/15WE	Powerpoint mech. 1 gang 15A 240V a.c. autoswitch white	EA	$25.70	$2.57	10	120
EM787U/20WE	Powerpoint mech. 1 gang 20A 240V a.c. unswitched white	EA	$22.62	$2.26	10	120
EM787U/25WE	Powerpoint mech. 1 gang 25A 240V a.c. unswitched with L shape earth white	EA	$27.53	$2.75	10	120
	Vertical single powerpoint mechanisms					
EMV787WE	Powerpoint mech. 1 gang 10A 240V a.c. white	EA	$19.22	$1.92	10	120
EMV787AWE	Powerpoint mech. 1 gang 10A 240V a.c. autoswitch white	EA	$19.22	$1.92	10	120
EMV787A/15WE	Powerpoint mech. 1 gang 15A 240V a.c. autoswitch white	EA	$39.86	$3.99	10	120

N New product | ECO Energy Saving products | More info available. See technical pages | COMING SOON Coming soon | Product to be discontinued

Whilst most items are stock lines some products are made to order. UoM = Unit Of Measure.
Prices are effective 1 June 2017 and are subject to change without notice. Trade prices exclude GST.

Excel Life

EM series mechanisms

EM803PIRWE

EM400TRWE

EM400A2PWE

EM3FCWE

Cat.Nos	PIR Sensor		UoM	Trade price $	GST $	Box qty	Carton qty
	Automatic						
EM803PIRWE	PIR sensor mechanism automatic 3 wire 5A white	N	EA	$99.90	$9.99	10	120
EM803PIRUG	PIR sensor mechanism automatic 3 wire 5A urban grey	N	EA	$101.90	$10.99	10	120
EM803PIRBL	PIR sensor mechanism automatic 3 wire 5A black	N	EA	$99.90	$9.99	10	120
	Manual Override						
EM803PIRSWE	PIR sensor mechanism manual overide 3 wire 5A white	N	EA	$111.90	$11.19	10	120
EM803PIRSUG	PIR sensor mechanism manual overide 3 wire 5A urban grey	N	EA	$114.90	$11.49	10	120
EM803PIRSBL	PIR sensor mechanism manual overide 3 wire 5A black	N	EA	$111.90	$11.19	10	120
	Dimmer mechanisms						
	Rotary dimmer mechanisms						
EM250TRWE	Dimmer mech. rotary trailing edge 2 wire 250VA 240V a.c. white	ECO	EA	$41.17	$4.12	10	120
EM250TRUG	Dimmer mech. rotary trailing edge 2 wire 250VA 240V a.c. urban grey	ECO	EA	$44.29	$4.43	10	120
EM400TRWE	Dimmer mech. rotary trailing edge 2 wire 400VA 240V a.c. white	ECO	EA	$64.34	$6.43	10	120
EM400TRUG	Dimmer mech. rotary trailing edge 2 wire 400VA 240V a.c. urban grey	ECO	EA	$67.47	$6.75	10	120
EM400TRBL	Dimmer mech. rotary trailing edge 2 wire 400VA 240V a.c. black	N ECO	EA	$64.34	$6.43	10	120
EM700TRWE	Dimmer mech. rotary trailing edge 2 wire 700VA 240V a.c. white	ECO	EA	$97.99	$9.80	10	120
EM700TRUG	Dimmer mech. rotary trailing edge 2 wire 700VA 240V a.c. urban grey	ECO	EA	$101.11	$10.11	10	120
	Push-button dimmer mechanisms						
EM400A2PWE	Dimmer mech. push-button 2 wire 16A 250V a.c. white	ECO	EA	$74.61	$7.46	10	120
EM400A2PUG	Dimmer mech. push-button 2 wire 16A 250V a.c. urban grey	ECO	EA	$77.73	$7.77	10	120
EM400A2PBL	Dimmer mech. push-button 2 wire 16A 250V a.c. black	N ECO	EA	$74.61	$7.46	10	120
EM400A3PWE	Dimmer mech. push-button 3 wire 16A 250V a.c. white	ECO	EA	$78.30	$7.83	10	120
EM400A3PUG	Dimmer mech. push-button 3 wire 16A 250V a.c. urban grey	ECO	EA	$81.43	$8.14	10	120
EM400A3PBL	Dimmer mech. push-button 3 wire 16A 250V a.c. black	N ECO	EA	$78.30	$7.83	10	120
	Remote controlled dimmers						
EM2000ERC	Dimmer mech. rotary remote leading edge 2 wire 2000VA 240V a.c. white	ECO	EA	$421.07	$42.11	1	10
	Fan controller mechanisms						
EM3FCWE	Fan controller mech. 3 speed 16A 250V a.c. white		EA	$18.54	$1.85	10	120
EM3FCUG	Fan controller mech. 3 speed 16A 250V a.c. urban grey		EA	$21.66	$2.17	10	120
EM3FCBL	Fan controller mech. 3 speed 16A 250V a.c. black	N	EA	$18.54	$1.85	10	120

N New product | ECO Energy Saving products | More info available. See technical pages | Coming soon | Product to be discontinued

Whilst most items are stock lines some products are made to order. UoM = Unit Of Measure.
Prices are effective 1 June 2017 and are subject to change without notice. Trade prices exclude GST.

Excel Life

EM series mechanisms

EMFFFOXWE

EMSPWE

EMRJ11C3WE

EMRJ45C6RD

EMRJ45C6YE

Cat.Nos	TV, phone, data and AV sockets		UoM	Trade price $	GST $	Box qty	Carton qty
	TV sockets						
EMFFFOXWE	TV mech. F-type Foxtel approved F30725 3GHz white		EA	$5.81	$0.58	10	120
EMFFFOXUG	TV mech. F-type Foxtel approved F30725 3GHz urban grey		EA	$8.93	$0.89	10	120
EMFFFOXBL	TV mech. F-type Foxtel approved F30725 3GHz black	N	EA	$5.81	$0.58	10	120
EMPFWE	TV mech. PAL to F-type white		EA	$5.34	$0.53	10	120
EMPFUG	TV mech. PAL to F-type urban grey		EA	$8.46	$0.85	10	120
EMPFBL	TV mech. PAL to F-type black	N	EA	$5.34	$0.53	10	120
EMSPWE	TV mech. PAL to saddle white		EA	$6.75	$0.68	10	120
EMSPUG	TV mech. PAL to saddle urban grey		EA	$9.87	$0.99	10	120
EMSPBL	TV mech. PAL to saddle black	N	EA	$6.75	$0.68	10	120
	Phone sockets						
EMRJ11C3WE	Phone mech. Cat3 white		EA	$8.18	$0.82	10	120
EMRJ11C3BL	Phone mech. Cat3 black		EA	$9.62	$0.96	10	120
EMRJ11C3BU	Phone mech. Cat3 blue		EA	$9.62	$0.96	10	120
EMRJ11C3GR	Phone mech. Cat3 green		EA	$9.62	$0.96	10	120
EMRJ11C3RD	Phone mech. Cat3 red		EA	$9.62	$0.96	10	120
EMRJ11C3YE	Phone mech. Cat3 yellow		EA	$9.62	$0.96	10	120
	RJ45 sockets						
EMRJ45C5EWE	RJ45 mech. Cat5E UTP 8 contacts white		EA	$9.29	$0.93	10	120
EMRJ45C5EBL	RJ45 mech. Cat5E UTP 8 contacts black		EA	$11.20	$1.12	10	120
EMRJ45C5EBU	RJ45 mech. Cat5E UTP 8 contacts blue		EA	$11.20	$1.12	10	120
EMRJ45C5EGR	RJ45 mech. Cat5E UTP 8 contacts green		EA	$11.20	$1.12	10	120
EMRJ45C5ERD	RJ45 mech. Cat5E UTP 8 contacts red		EA	$11.20	$1.12	10	120
EMRJ45C5EYE	RJ45 mech. Cat5E UTP 8 contacts yellow		EA	$11.20	$1.12	10	120
EMRJ45C6WE	RJ45 mech. Cat6 UTP 8 contacts white		EA	$11.22	$1.12	10	120
EMRJ45C6BL	RJ45 mech. Cat6 UTP 8 contacts black		EA	$13.53	$1.35	10	120
EMRJ45C6BU	RJ45 mech. Cat6 UTP 8 contacts blue		EA	$13.53	$1.35	10	120
EMRJ45C6GR	RJ45 mech. Cat6 UTP 8 contacts green		EA	$13.53	$1.35	10	120
EMRJ45C6RD	RJ45 mech. Cat6 UTP 8 contacts red		EA	$13.53	$1.35	10	120
EMRJ45C6YE	RJ45 mech. Cat6 UTP 8 contacts yellow		EA	$13.53	$1.35	10	120

N New product | ECO Energy Saving products | More info available. See technical pages | COMING SOON Coming soon | Product to be discontinued

Whilst most items are stock lines some products are made to order. UoM = Unit Of Measure.
Prices are effective 1 June 2017 and are subject to change without notice. Trade prices exclude GST.

Excel Life

EM series mechanisms

EMKEYSTONEAWE

EMKEYSTONEBWE

033181

Cat.Nos	TV, phone, data and AV sockets		UoM	Trade price $	GST $	Box qty	Carton qty
	Fast connection RJ45 sockets LCS²						
033160	RJ45 keystone Cat5E UTP white	N	EA	$10.32	$1.03	10	-
033180	RJ45 keystone Cat5E UTP black	N	EA	$11.36	$1.14	10	-
033161	RJ45 keystone Cat6 UTP white	N	EA	$12.40	$1.24	10	-
033181	RJ45 keystone Cat6 UTP black	N	EA	$13.03	$1.30	10	-
033154	RJ45 keystone Cat6A STP white	N	EA	$23.86	$2.39	10	-
033155	RJ45 keystone Cat6A UTP white	N	EA	$16.57	$1.66	10	-
	Keystone adaptors						
EMKEYSTONEAWE	Keystone adaptor for Krone, Hubbel, Leviton, Siemens and Clipsal white		EA	$1.91	$0.19	20	240
EMKEYSTONEAUG	Keystone adaptor for Krone, Hubbel, Leviton, Siemens and Clipsal urban grey		EA	$5.03	$0.50	20	240
EMKEYSTONEABL	Keystone adaptor for Krone, Hubbel, Leviton, Siemens and Clipsal black	N	EA	$1.91	$0.19	20	240
EMKEYSTONEBWE	Keystone adaptor for Panduit jacks white		EA	$1.91	$0.19	20	240
EMKEYSTONEBUG	Keystone adaptor for Panduit jacks urban grey		EA	$5.03	$0.50	20	240
EMKEYSTONECWE	Keystone adaptor for Systimax jacks white		EA	$1.91	$0.19	20	240
EMKEYSTONECUG	Keystone adaptor for Systimax jacks urban grey		EA	$5.03	$0.50	20	240
EMKEYSTONEDWE	Keystone adaptor for Tyco/AMP jacks white		EA	$1.91	$0.19	20	240
EMKEYSTONEDUG	Keystone adaptor for Tyco/AMP jacks urban grey		EA	$5.03	$0.50	20	240
EMKEYSTONEEWE	Keystone adaptor for Molex jacks white		EA	$1.91	$0.19	20	240
EMKEYSTONEEUG	Keystone adaptor for Molex jacks urban grey		EA	$5.03	$0.50	20	240
EMKEYSTONELWE	Keystone adaptor for Legrand LCS² jacks white	N	EA	$1.91	$0.19	10	240
EMKEYSTONELUG	Keystone adaptor for Legrand LCS² jacks urban grey	N	EA	$5.03	$0.50	10	240
EMKEYSTONELBL	Keystone adaptor for Legrand LCS² jacks black	N	EA	$1.91	$0.19	10	240

N New product | ECO Energy Saving products | More info available. See technical pages | COMING SOON Coming soon | Product to be discontinued

Whilst most items are stock lines some products are made to order. UoM = Unit Of Measure.
Prices are effective 1 June 2017 and are subject to change without notice. Trade prices exclude GST.

Excel Life

EM series mechanisms

EM910HDMIWE

EMRCAWEWE

EMRCARDWE

EMUSB2PSAWE

EMUSB2PSXUG

EM800BPRDWE

Cat.Nos	Phone TV, data and AV sockets	UoM	Trade price $	GST $	Box qty	Carton qty
	HDMI sockets					
EM910HDMIWE	HDMI mech. 150mm flying lead 1 module white	EA	$37.09	$3.71	10	120
EM910HDMIBL	HDMI mech. 150mm flying lead 1 module black N	EA	$37.09	$3.71	10	120
	Audio sockets					
EM800BPBLWE	Audio mech. black banana socket white	EA	$14.21	$1.42	10	120
EM800BPBLUG	Audio mech. black banana socket urban grey	EA	$17.33	$1.73	10	120
EM800BPRDWE	Audio mech. red banana socket white	EA	$14.21	$1.42	10	120
EM800BPRDUG	Audio mech. red banana socket urban grey	EA	$17.33	$1.73	10	120
EMRCARDWE	Audio mech. red RCA outlet white	EA	$7.95	$0.80	10	120
EMRCARDUG	Audio mech. red RCA outlet urban grey	EA	$7.95	$0.80	10	120
EMRCAWEWE	Audio mech. white RCA outlet white	EA	$7.95	$0.80	10	120
EMRCAWEUG	Audio mech. white RCA outlet urban grey	EA	$7.95	$0.80	10	120
EMRCAYELWE	Audio mech. yellow RCA outlet white	EA	$7.95	$0.80	10	120
EMRCAYELUG	Audio mech. yellow RCA outlet urban grey	EA	$7.95	$0.80	10	120
	USB 3.0 sockets for data transfer					
EM910USBWE	USB mech. 150mm flying lead 1 module white	EA	$35.81	$3.58	10	120
EM910USBBL	USB mech. 150mm flying lead 1 module black N	EA	$35.81	$3.58	10	120
	Dual USB charging mechanisms					
	For plasterboard or single brick installations - Dual type A					
EMUSB2PSAWE	USB charger mech. 2 x 2.4A white	EA	$51.95	$5.20	-	12
EMUSB2PSAUG	USB charger mech. 2 x 2.4A urban grey	EA	$55.07	$5.51	-	12
EMUSB2PSABL	USB charger mech. 2 x 2.4A black N	EA	$51.95	$5.20	-	12
	For wall box, fire box or double brick installations - Dual type A					
EMUSB2PSXWE	USB charger mech. with inline connector 2 x 2.4A white	EA	$58.19	$5.82	-	12
EMUSB2PSXUG	USB charger mech. with inline connector 2 x 2.4A urban grey	EA	$61.31	$6.13	-	12
EMUSB2PSXBL	USB charger mech. with inline connector 2 x 2.4A black N	EA	$58.19	$5.82	-	12
	Extension lead for dual USB charger mechanisms EMUSB2PSX series					
EAUSBEXT3WE	Extension lead 3m with connectors for EMUSB2PSX USB charger mechanisms	EA	$22.80	$2.28	-	-

N New product | ECO Energy Saving products | More info available. See technical pages | COMING SOON Coming soon | Product to be discontinued

Whilst most items are stock lines some products are made to order. UoM = Unit Of Measure.
Prices are effective 1 June 2017 and are subject to change without notice. Trade prices exclude GST.

Excel Life

EM series mechanisms

EMUSB2ACWE

EMUSB1CWE

Cat.Nos	USB charging mechanisms		UoM	Trade price $	GST $	Box qty	Carton qty
	For plasterboard or single brick wall installations - Dual type A&C						
EMUSB2ACWE	USB charger mech. dual type A&C 2x2.4A white	N	EA	$59.90	$5.99	-	12
EMUSB2ACUG	USB charger mech. dual type A&C 2x2.4A urban grey	N	EA	$61.90	$6.19	-	12
EMUSB2ACBL	USB charger mech. dual type A&C 2x2.4A black	N	EA	$59.90	$5.99	-	12
	For plasterboard or single brick wall installations - Single type C						
EMUSB1CWE	USB charger mech. type C 45W white	COMING SOON	EA	$69.90	$6.99	-	12
EMUSB1CUG	USB charger mech. type C 45W urban grey	COMING SOON	EA	$71.90	$7.19	-	12
EMUSB1CBL	USB charger mech. type C 45W black	COMING SOON	EA	$69.90	$6.99	-	12

N New product | ECO Energy Saving products | More info available. See technical pages | COMING SOON Coming soon | Product to be discontinued

Whilst most items are stock lines some products are made to order. UoM = Unit Of Measure.
Prices are effective 1 June 2017 and are subject to change without notice. Trade prices exclude GST.

Excel Life

EM series mechanisms

EM770LEDWE

EMPAPS1WE

EMPS2WE

EMPS1WE

EM803SURGEWE

Cat.Nos	Indicator mechanisms	UoM	Trade price $	GST $	Box qty	Carton qty
EM770LEDWE	Blue LED ring for rocker switches 250V a.c. white	EA	$5.81	$0.58	10	120
EM770LEDUG	Blue LED ring for rocker switches 250V a.c. urban grey	EA	$8.93	$0.89	10	120
EM770LEDBL	Blue LED ring for rocker switches 250V a.c. black N	EA	$5.81	$0.58	10	120
EM803LEDWE	Coloured indicator kit 250V a.c. white	EA	$25.40	$2.54	10	120
EM803LEDUG	Coloured indicator kit 250V a.c. urban grey	EA	$28.52	$2.85	10	120
EMPAPS1WE	Amber available/red power supplied indicator 250V a.c. white	EA	$23.73	$2.37	10	120
EMPAPS1UG	Amber power available/red power supplied indicator 250V a.c. urban grey	EA	$26.86	$2.69	10	120
EMPAPS2WE	Amber power available 2 x red power supplied indicator 250V a.c. white	EA	$28.48	$2.85	10	120
EMPAPS2UG	Amber power available 2 x red power supplied indicator 250V a.c. urban grey	EA	$31.60	$3.16	10	120
EMPAWE	Amber power available indicator 250V a.c. white	EA	$23.73	$2.37	10	120
EMPAUG	Amber power available indicator 250V a.c. urban grey	EA	$26.86	$2.69	10	120
EMPS1WE	Red power supplied indicator 250V a.c. white	EA	$23.73	$2.37	10	120
EMPS1UG	Red power supplied indicator 250V a.c. urban grey	EA	$26.86	$2.69	10	120
EMPS2WE	Red power supplied x 2 indicator 250V a.c. white	EA	$28.48	$2.85	10	120
EMPS2UG	Red power supplied x 2 indicator 250V a.c. urban grey	EA	$31.60	$3.16	10	120
	Surge protection mechanisms					
EM803SURGEWE	Surge protection mech. 500J 240V a.c. with LED white	EA	$54.88	$5.49	10	120
EM803SURGEUG	Surge protection mech. 500J 240V a.c. with LED urban grey	EA	$58.00	$5.80	10	120

N New product | ECO Energy Saving products | More info available. See technical pages | COMING SOON Coming soon | Product to be discontinued

Whilst most items are stock lines some products are made to order. UoM = Unit Of Measure.
Prices are effective 1 June 2017 and are subject to change without notice. Trade prices exclude GST.

Excel Life

Accessories

EA910/1WE

EA910/2WE

EMCLIDWE

EA143/4H

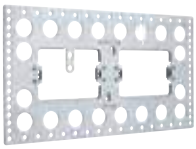
EA503/2W

Cat.Nos	Blank modules	UoM	Trade price $	GST $	Box qty	Carton qty
EMIDWE	Blank module white	EA	$1.37	$0.14	10	120
EMIDUG	Blank module urban grey	EA	$4.50	$0.45	10	120
EMCLIDWE	Blank module with clear cap white	EA	$1.86	$0.19	10	120
EMCLIDUG	Blank module with clear cap urban grey	EA	$2.99	$0.30	10	120
EMCLIDBL	Blank module with clear cap black N	EA	$1.86	$0.19	10	120
	Circuit identification labels for use with EMCLID modules					
EACIDLABELWE	Circuit identification labels white 96 labels per sheet - pack of 10 sheets	EA	$15.23	$1.52	10	120
EACIDLABELBU	Circuit identification labels blue 96 labels per sheet - pack of 10 sheets	EA	$15.23	$1.52	10	120
EACIDLABELRED	Circuit identification labels red 96 labels per sheet - pack of 10 sheets	EA	$15.23	$1.52	10	120
EACIDLABELYE	Circuit identification labels yellow 96 labels per sheet - pack of 10 sheets	EA	$15.23	$1.52	10	120
	Insert modules					
EA910/1WE	Insert 1 module 1 gang white	EA	$1.78	$0.18	10	120
EA910/1UG	Insert 1 module 1 gang urban grey	EA	$4.90	$0.49	10	120
EA910/1BL	Insert 1 module 1 gang black N	EA	$1.78	$0.18	10	120
EA910/2WE	Insert 1 module 2 gang white	EA	$1.78	$0.18	10	120
EA910/2UG	Insert 1 module 2 gang urban grey	EA	$4.90	$0.49	10	120
EA910/2BL	Insert 1 module 2 gang black N	EA	$1.78	$0.18	10	120
EA910/0WE	Insert 1 module blank white	EA	$1.78	$0.18	10	120
EA910/0UG	Insert 1 module blank urban grey	EA	$4.90	$0.49	10	120
EA910/0BL	Insert 1 module blank black N	EA	$1.78	$0.18	10	120
	Multi-gang brackets					
	Vertical mounting					
EA143/2H	Metal bracket 2 gang stud mount	EA	$6.88	$0.69	-	30
EA143/3H	Metal bracket 3 gang stud mount	EA	$8.03	$0.80	-	20
EA143/4H	Metal bracket 4 gang stud mount	EA	$9.45	$0.94	-	20
EA503/2H	Metal render bracket 2 gang stud mount	EA	$10.53	$1.05	-	30
EA503/3H	Metal render bracket 3 gang stud mount	EA	$11.70	$1.17	-	30
EA503/4H	Metal render bracket 4 gang stud mount	EA	$13.12	$1.31	-	30
	Horizontal mounting					
EA143/2W	Metal bracket 2 gang stud mount	EA	$6.88	$0.69	-	30
EA143/3W	Metal bracket 3 gang stud mount	EA	$8.03	$0.80	-	20
EA503/2W	Metal render bracket 2 gang stud mount	EA	$10.53	$1.05	-	30
EA503/3W	Metal render bracket 3 gang stud mount	EA	$11.70	$1.17	-	30

N New product | ECO Energy Saving products | More info available. See technical pages | COMING SOON Coming soon | Product to be discontinued

Whilst most items are stock lines some products are made to order. UoM = Unit Of Measure.
Prices are effective 1 June 2017 and are subject to change without notice. Trade prices exclude GST.

Excel Life

Accessories

EA751

EM910RPWE

EMCCWE

EA920PMAWE

EADIMKNOBWE

EAFANKNOBWE

Cat.Nos	Shrouds		UoM	Trade price $	GST $	Box qty	Carton qty
EA751	Shroud for panel mount		EA	$5.75	$0.58	10	120
	Cable retainers						
EM910RPWE	Plug & cable retainer 1 module white		EA	$21.67	$2.17	10	120
	Cord clamps						
EMCCWE	Cord clamp white		EA	$7.60	$0.76	10	120
EMCCUG	Cord clamp urban grey		EA	$10.72	$1.07	10	120
EMCCBL	Cord clamp black	N	EA	$7.60	$0.76	10	120
	Dimmer knobs						
EADIMKNOBWE	Dimmer knob white pk of 5		EA	$21.55	$2.16	10	120
EADIMKNOBUG	Dimmer knob urban grey pk of 5		EA	$24.67	$2.47	10	120
EADIMKNOBBL	Dimmer knob black pk of 5	N	EA	$21.55	$2.16	10	120
	Fan controller knobs						
EAFANKNOBWE	Fan knob white pk of 5	N	EA	$20.04	$2.00	10	120
EAFANKNOBUG	Fan knob urban grey pk of 5	N	EA	$23.16	$2.32	10	120
EAFANKNOBBL	Fan knob black pk of 5	N	EA	$8.32	$0.83	10	120
	Panel adaptor						
EA910PMAWE	Adaptor panel mount 1 module white		EA	$3.80	$0.38	10	120
EA920PMAWE	Adaptor panel mount 2 module white		EA	$4.81	$0.48	10	120
	Mechanism retention kit						
EAPWDSCREW	Mechanism retention kit for public works department 1-4 gang white		EA	$6.91	$0.69	10	120
EAPWD5GKIT	Mechanism retention kit for public works department 5 gang white		EA	$12.50	$1.25	10	120
EAPWD6GKIT	Mechanism retention kit for public works department 6 gang white		EA	$33.26	$3.33	10	120
	Key fob						
EAKEYFOB	Key fob plastic white		EA	$42.71	$4.27	10	120
	Paint cover						
EAPP	Paint cover plastic transparent		EA	$0.15	$0.02	50	500

N New product | ECO Energy Saving products | More info available. See technical pages | COMING SOON Coming soon | Product to be discontinued

Whilst most items are stock lines some products are made to order. UoM = Unit Of Measure.
Prices are effective 1 June 2017 and are subject to change without notice. Trade prices exclude GST.

Excel Life Medical

Switches

EC770/1CAWE

EC770/4CAWE

EC770/2HCAWE

Cat.Nos	Vertical switches	UoM	Trade price $	GST $	Box qty	Carton qty
	Rocker switches - Single Pole Double Throw (SPDT) - antimicrobial & chemical resistant					
EC770/1CAWE	Switch 1 gang 16AX 240V a.c. white	EA	$8.88	$0.89	10	120
EC770/2CAWE	Switch 2 gang 16AX 240V a.c. white	EA	$14.44	$1.44	10	120
EC770/3CAWE	Switch 3 gang 16AX 240V a.c. white	EA	$27.17	$2.72	10	120
EC770/4CAWE	Switch 4 gang 16AX 240V a.c. white	EA	$42.38	$4.24	10	120
	Horizontal switches					
	Rocker switches - Single Pole Double Throw (SPDT) - antimicrobial & chemical resistant					
EC770/1HCAWE	Switch 1 gang 16AX 240V a.c. white	EA	$8.88	$0.89	10	120
EC770/2HCAWE	Switch 2 gang 16AX 240V a.c. white	EA	$14.44	$1.44	10	120
EC770/3HCAWE	Switch 3 gang 16AX 240V a.c. white	EA	$27.17	$2.72	10	120
EC770/4HCAWE	Switch 4 gang 16AX 240V a.c. white	EA	$42.38	$4.24	10	120
	Spring return - Single Pole Double Throw (SPDT) - antimicrobial & chemical resistant					
EC770XPRESSCAWE	Push-button switch "Press" engraved 1 gang 16A 240V a.c. white	EA	$15.48	$1.55	10	120

THE ANTIMICROBIAL ADVANTAGE

The antimicrobial advantage in the Excel Life Medical range stems from the material construction based on silver ions - widely recognised as having antimicrobial properties that contribute to the reduction of undesired microorganisms.

This technology reduces the risk of proliferation of bacteria without building antibiotic resistance, and together with standard infection control practices assures optimum hygiene.

The Excel Life Medical range has been tested by an independent TGA accredited laboratory to JIS Z 2801:2010 and proven to be an effective antibacterial agent.

The results demonstrated a kill rate against Escherichia Coli and Staphylococcus Aureus between 99.72% and 99.9999%*.
Look for products with the antimicrobial symbol.

*Please refer to technical data sheets for detailed information or visit www.legrand.com.au

N New product | ECO Energy Saving products | More info available. See technical pages | Coming soon | Product to be discontinued

Whilst most items are stock lines some products are made to order. UoM = Unit Of Measure.
Prices are effective 1 June 2017 and are subject to change without notice. Trade prices exclude GST.

Excel Life Medical

Powerpoints

EC787CAWE

EC787NIDCARD

EC787/15NCAWE

EC787CABE

EC777CAWE

EC777NIDCABU

Cat.Nos	Horizontal powerpoints	UoM	Trade price $	GST $	Box qty	Carton qty
	Single powerpoints - "RCD protected" engraved - antimicrobial & chemical resistant					
EC787CAWE	Powerpoint 1 gang 10A 240V a.c. white	EA	$11.58	$1.16	10	120
EC787CARD	Powerpoint 1 gang 10A 240V a.c. red	EA	$12.75	$1.28	10	120
EC787CABU	Powerpoint 1 gang 10A 240V a.c. blue	EA	$12.75	$1.28	10	120
EC787XCAWE	Powerpoint 1 gang 10A 240V a.c. with extra function hole white	EA	$21.89	$2.19	10	120
EC787NCAWE	Powerpoint 1 gang 10A 240V a.c. with LED "power available" white	EA	$35.28	$3.53	10	120
EC787NCARD	Powerpoint 1 gang 10A 240V a.c. with LED "power available" red	EA	$37.04	$3.70	10	120
EC787NCABU	Powerpoint 1 gang 10A 240V a.c. with LED "power available" blue	EA	$37.04	$3.70	10	120
EC787NIDCAWE	Powerpoint 1 gang 10A 240V a.c. with LED "power available" & circuit ID white	EA	$37.64	$3.76	10	120
EC787NIDCARD	Powerpoint 1 gang 10A 240V a.c. with LED "power available" & circuit ID red	EA	$39.54	$3.95	10	120
EC787NIDCABU	Powerpoint 1 gang 10A 240V a.c. with LED "power available" & circuit ID blue	EA	$39.54	$3.95	10	120
EC787/15CAWE	Powerpoint 1 gang 15A 240V a.c. white	EA	$23.91	$2.39	10	120
EC787/15CARD	Powerpoint 1 gang 15A 240V a.c. red	EA	$25.12	$2.51	10	120
EC787/15CABU	Powerpoint 1 gang 15A 240V a.c. blue	EA	$25.12	$2.51	10	120
EC787/15NCAWE	Powerpoint 1 gang 15A 240V a.c. with LED "power available" white	EA	$36.95	$3.70	10	120
EC787/15NCARD	Powerpoint 1 gang 15A 240V a.c. with LED "power available" red	EA	$38.77	$3.88	10	120
EC787/15NCABU	Powerpoint 1 gang 15A 240V a.c. with LED "power available" blue	EA	$38.77	$3.88	10	120
	Cleaner single powerpoints - "Cleaning purposes only" engraved - antimicrobial & chemical resistant					
EC787CABE	Powerpoint 1 gang 10A 240V a.c. beige	EA	$12.75	$1.28	10	120
EC787IDCABE	Powerpoint 1 gang 10A 240V a.c. with circuit ID beige	EA	$15.12	$1.51	10	120
EC787/15CABE	Powerpoint 1 gang 15A 240V a.c. beige	EA	$25.12	$2.51	10	120
	Double powerpoints - "RCD protected" engraved - antimicrobial & chemical resistant					
EC777CAWE	Powerpoint 2 gang 10A 240V a.c. white	EA	$18.62	$1.86	10	120
EC777CARD	Powerpoint 2 gang 10A 240V a.c. red	EA	$20.11	$2.01	10	120
EC777CABU	Powerpoint 2 gang 10A 240V a.c. blue	EA	$20.11	$2.01	10	120
EC777XCAWE	Powerpoint 2 gang 10A 240V a.c. with extra function hole white	EA	$35.05	$3.50	10	120
EC777XCARD	Powerpoint 2 gang 10A 240V a.c. with extra function hole red N	EA	$37.34	$3.73	10	120
EC777XCABU	Powerpoint 2 gang 10A 240V a.c. with extra function hole blue N	EA	$37.34	$3.73	10	120
EC777NCAWE	Powerpoint 2 gang 10A 240V a.c. with LED "power available" white	EA	$44.86	$4.49	10	120
EC777NCARD	Powerpoint 2 gang 10A 240V a.c. with LED "power available" red	EA	$47.13	$4.71	10	120
EC777NCABU	Powerpoint 2 gang 10A 240V a.c. with LED "power available" blue	EA	$47.13	$4.71	10	120
EC777NIDCAWE	Powerpoint 2 gang 10A 240V a.c. with LED "power available" & circuit ID white	EA	$47.23	$4.72	10	120
EC777NIDCARD	Powerpoint 2 gang 10A 240V a.c. with LED "power available" & circuit ID red	EA	$49.60	$4.96	10	120
EC777NIDCABU	Powerpoint 2 gang 10A 240V a.c. with LED "power available" & circuit ID blue	EA	$49.60	$4.96	10	120

N New product | ECO Energy Saving products | More info available. See technical pages | COMING SOON Coming soon | Product to be discontinued

Whilst most items are stock lines some products are made to order. UoM = Unit Of Measure.
Prices are effective 1 June 2017 and are subject to change without notice. Trade prices exclude GST.

Excel Life Medical

Powerpoints

EC777CABE

EC777EL10CAWE

EC777EL10IDCAWE

ECV777NCAWE

ECV787NCARD

ECV787/15NCAWE

Cat.Nos	Horizontal powerpoints	UoM	Trade price $	GST $	Box qty	Carton qty
	Cleaners double powerpoints - "Cleaning purposes only" engraved - antimicrobial & chemical resistant					
EC777CABE	Powerpoint 2 gang 10A 240V a.c. beige	EA	$20.11	$2.01	10	120
EC777IDCABE	Powerpoint 2 gang with circuit ID 10A 240V a.c. beige	EA	$22.46	$2.25	10	120
	RCD protected double powerpoints - with power available & supplied LEDs - "RCD protected" engraved - antimicrobial & chemical resistant					
EC777EL10CAWE	Powerpoint 2 gang 10A 240V a.c. RCD 10mA white	EA	$219.86	$21.99	2	24
EC777EL10CARD	Powerpoint 2 gang 10A 240V a.c. RCD 10mA red	EA	$230.89	$23.09	2	24
EC777EL10CABU	Powerpoint 2 gang 10A 240V a.c. RCD 10mA blue	EA	$230.89	$23.09	2	24
EC777EL10IDCAWE	Powerpoint 2 gang 10A 240V a.c. RCD 10mA with circuit ID white	EA	$222.27	$22.23	2	24
EC777EL10IDCARD	Powerpoint 2 gang 10A 240V a.c. RCD 10mA with circuit ID red	EA	$233.48	$23.35	2	24
EC777EL10IDCABU	Powerpoint 2 gang 10A 240V a.c. RCD 10mA with circuit ID blue	EA	$233.48	$23.35	2	24
EC777EL30CAWE	Powerpoint 2 gang 10A 240V a.c. RCD 30mA white	EA	$181.02	$18.10	2	24
	Cleaners RCD protected double powerpoints - "Cleaning purposes only" engraved - antimicrobial & chemical resistant					
EC777EL10CABE	Powerpoint 2 gang 10A 240V a.c. RCD 10mA beige	EA	$218.85	$21.88	2	24
EC777EL10IDCABE	Powerpoint 2 gang 10A 240V a.c. RCD 10mA with circuit ID beige	EA	$233.48	$23.35	2	24
	Vertical powerpoints					
	Single powerpoints - "RCD protected" engraved - antimicrobial & chemical resistant					
ECV787CAWE	Powerpoint 1 gang 10A 240V a.c. white	EA	$19.58	$1.96	10	120
ECV787XCAWE	Powerpoint 1 gang 10A 240V a.c. with extra function hole white	EA	$38.27	$3.83	10	120
ECV787NCAWE	Powerpoint 1 gang 10A 240V a.c. with LED "power available" white	EA	$47.33	$4.73	10	120
ECV787NCARD	Powerpoint 1 gang 10A 240V a.c. with LED "power available" red	EA	$49.69	$4.97	10	120
ECV787NCABU	Powerpoint 1 gang 10A 240V a.c. with LED "power available" blue	EA	$49.69	$4.97	10	120
ECV787NIDCAWE	Powerpoint 1 gang 10A 240V a.c. with LED "power available" & circuit ID white	EA	$49.70	$4.97	10	120
ECV787NIDCARD	Powerpoint 1 gang 10A 240V a.c. with LED "power available" & circuit ID red	EA	$52.16	$5.22	10	120
ECV787NIDCABU	Powerpoint 1 gang 10A 240V a.c. with LED "power available" & circuit ID blue	EA	$52.16	$5.22	10	120
ECV787/15NCAWE	Powerpoint 1 gang 15A 240V a.c. with LED "power available" white	EA	$51.20	$5.12	10	120
ECV787/15NCARD	Powerpoint 1 gang 15A 240V a.c. with LED "power available" red	EA	$53.77	$5.38	10	120
ECV787/15NCABU	Powerpoint 1 gang 15A 240V a.c. with LED "power available" blue	EA	$53.77	$5.38	10	120
	Double powerpoints - "RCD protected" engraved - antimicrobial & chemical resistant					
ECV777CAWE	Powerpoint 2 gang 10A 240V a.c. white	EA	$31.35	$3.14	10	120
ECV777XCAWE	Powerpoint 2 gang 10A 240V a.c. with extra function hole white	EA	$58.38	$5.84	10	120
ECV777NCAWE	Powerpoint 2 gang 10A 240V a.c. with LED "power available" white	EA	$61.51	$6.15	10	120
ECV777NCARD	Powerpoint 2 gang 10A 240V a.c. with LED "power available" red	EA	$64.57	$6.46	10	120
ECV777NCABU	Powerpoint 2 gang 10A 240V a.c. with LED "power available" blue	EA	$64.57	$6.46	10	120

N New product | ECO Energy Saving products | More info available. See technical pages | COMING SOON Coming soon | Product to be discontinued

Whilst most items are stock lines some products are made to order. UoM = Unit Of Measure.
Prices are effective 1 June 2017 and are subject to change without notice. Trade prices exclude GST.

Excel Life Medical

RCD plates, gas outlets, mechanisms, grid & plates

ECEL10N2IDCAWE

ECEES/1GCAWE

EM770CARED

EC770/1GPLCAWE

EC770/3GPLCAWE

Cat.Nos	RCD plates 10mA Vertical - with power available LED - antimicrobial & chemical resistant		UoM	Trade price $	GST $	Box qty	Carton qty
ECEL10N2CAWE	RCD switch 10mA white		EA	$202.28	$20.23	2	24
ECEL10N2CARD	RCD switch 10mA red		EA	$222.51	$22.25	2	24
ECEL10N2CABU	RCD switch 10mA blue		EA	$222.51	$22.25	2	24
ECEL10N2IDCAWE	RCD switch 10mA with circuit ID white		EA	$204.07	$20.41	2	24
ECEL10N2IDCARD	RCD switch 10mA with circuit ID red		EA	$224.30	$22.43	2	24
ECEL10N2IDCABU	RCD switch 10mA with circuit ID blue		EA	$224.30	$22.43	2	24
	RCD plates 10mA Horizontal - with power available LED - antimicrobial & chemical resistant						
ECEL10HN2IDCAWE	RCD switch 10mA with circuit ID white	N	EA	$204.07	$20.41	2	24
ECEL10HN2IDCARD	RCD switch 10mA with circuit ID red	N	EA	$215.47	$21.55	2	24
ECEL10HN2IDCABU	RCD switch 10mA with circuit ID blue	N	EA	$215.47	$21.55	2	24
	Earth stud (node) - antimicrobial & chemical resistant						
ECEES/1GCAWE	Equipotential earth stud outlet 1 gang white		EA	$41.93	$4.19	10	120
ECEES/2GCAWE	Equipotential earth stud outlet 2 gang white		EA	$71.69	$7.17	10	120
	Switch mechanisms - Single Pole Double Throw (SPDT) - antimicrobial & chemical resistant						
EM770CAWE	Switch mech. 2 way 16AX 240V a.c. white		EA	$7.81	$0.78	10	120
EM770CARED	Switch mech. 2 way 16AX 240V a.c. red		EA	$8.04	$0.80	10	120
	Grid & plates - antimicrobial & chemical resistant						
EC770/1GPLCAWE	Grid & plate 1 gang white		EA	$4.66	$0.47	10	120
EC770/2GPLCAWE	Grid & plate 2 gang white		EA	$4.66	$0.47	10	120
EC770/3GPLCAWE	Grid & plate 3 gang white		EA	$4.66	$0.47	10	120
EC770/4GPLCAWE	Grid & plate 4 gang white		EA	$4.66	$0.47	10	120
EC770/5GPLCAWE	Grid & plate 5 gang white		EA	$4.66	$0.47	10	120
EC770/6GPLCAWE	Grid & plate 6 gang white		EA	$4.66	$0.47	10	120
EC770/0GPLCAWE	Grid & plate blank white		EA	$4.66	$0.47	10	120
	Audio visual RCD alarm						
ECVAVALWE	Audio & visual RCD alarm 240V a.c. white	N	EA	$196.75	$19.68	-	-
	Signs						
ECCPASIGN	Cardiac protected area sign 200x90mm green	N	EA	$30.19	$3.02	-	-
ECBPASIGN	Body protected area sign 200x90mm green	N	EA	$30.19	$3.02	-	-

N New product | ECO Energy Saving products | More info available. See technical pages | COMING SOON Coming soon | Product to be discontinued

Whilst most items are stock lines some products are made to order. UoM = Unit Of Measure.
Prices are effective 1 June 2017 and are subject to change without notice. Trade prices exclude GST.

Excel Life Medical

Coverplates

EA3470PLSS

ECGAS1GPLCAWE

EAEPJUNCTION

EAEPNODE

Cat.Nos	Horizontal coverplates	UoM	Trade price $	GST $	Box qty	Carton qty
	Plastic coverplates - antimicrobial & chemical resistant					
ECCWPLCAWE	Common series coverplate 1 gang white	EA	$3.39	$0.34	10	120
	Stainless steel coverplates - suitable for standard wall boxes					
EA270PLSS	2 gang 70mm spacing stainless steel	EA	$58.07	$5.81	-	10
EA370PLSS	3 gang 70mm spacing stainless steel	EA	$60.09	$6.01	-	10
EA470PLSS	4 gang 70mm spacing stainless steel	EA	$62.11	$6.21	-	10
EA2270PLSS	2+2 gang 70mm spacing stainless steel	EA	$65.48	$6.55	-	10
EA2370PLSS	2+3 gang 70mm spacing stainless steel	EA	$68.50	$6.85	-	10
EA3370PLSS	3+3 gang 70mm spacing stainless steel	EA	$72.02	$7.20	-	10
EA3470PLSS	3+4 gang 70mm spacing stainless steel	EA	$75.94	$7.59	-	10
	Gas outlets stainless steel coverplates					
EA2100PLSS	2 gang 100mm spacing stainless steel	EA	$60.09	$6.01	-	10
EA3100PLSS	3 gang 100mm spacing stainless steel	EA	$62.11	$6.21	-	10
	Vertical coverplates					
	Gas outlet plastic coverplates - antimicrobial & chemical resistant					
ECGAS1GPLCAWE	1 gang white suitable for Hoslab gas	EA	$13.76	$1.38	10	120
ECGAS2GPLCAWE	2 gang with scavenge white suitable for Hoslab gas	EA	$13.76	$1.38	10	120
ECGAS3GPLCAWE	3 gang white suitable for BOC gas	EA	$13.76	$1.38	10	120
ECGAS4GPLCAWE	4 gang with scavenge white suitable for BOC gas	EA	$13.76	$1.38	10	120
	Equipotential boxes					
EAEPJUNCTION	Equipotential box with earth terminal and stainless steel coverplate	EA	$360.07	$36.01	-	-
EAEPNODE	Equipotential box kit with earth terminal, earth stud & stainless steel coverplate	EA	$379.61	$37.96	-	-
	Standard recessed wall boxes					
EABOX270	2 gang 70mm spacing 150x150x65 metal	EA	$69.41	$6.94	-	-
EABOX370	3 gang 70mm spacing 225x150x65 metal	EA	$78.73	$7.87	-	-
EABOX470	4 gang 70mm spacing 300x150x65 metal	EA	$88.16	$8.82	-	-
EABOX2100	2 gang 100mm spacing 225x150x65 metal	EA	$69.41	$6.94	-	-
EABOX3100	3 gang 100mm spacing 300x150x65 metal	EA	$78.73	$7.87	-	-
	Panel adaptor					
EA910PMAWE	Adaptor panel mount 1 module white panel thickness 0.7 to 3mm	EA	$3.80	$0.38	10	120
EA920PMAWE	Adaptor panel mount 2 module white panel thickness 0.7 to 3mm	EA	$4.81	$0.48	10	120

N New product | ECO Energy Saving products | More info available. See technical pages | COMING SOON Coming soon | Product to be discontinued

Whilst most items are stock lines some products are made to order. UoM = Unit Of Measure.
Prices are effective 1 June 2017 and are subject to change without notice. Trade prices exclude GST.

Excel

Switches

XL770/1WE

XL770/1BL

XL770/2CR

XL770/3BL

XLP770/4WEWE

XL770/5WE

Cat.Nos	Vertical switches	UoM	Trade price $	GST $	Box qty	Carton qty
	Rocker switches - Single Pole Double Throw (SPDT)					
XL770/1WE	Switch 1 gang 2 way 10A 240V a.c. white	EA	$10.85	$1.08	10	160
XLP770/1WEWE	Switch 1 gang 2 way 10A 240V a.c. gloss white	EA	$10.85	$1.08	10	160
XL770/1BL	Switch 1 gang 2 way 10A 240V a.c. black	EA	$10.85	$1.08	10	160
XLP770/1BLBL	Switch 1 gang 2 way 10A 240V a.c. gloss black	EA	$10.85	$1.08	10	160
XL770/1CR	Switch 1 gang 2 way 10A 240V a.c. cream	EA	$10.85	$1.08	10	160
XLP770/1CRCR	Switch 1 gang 2 way 10A 240V a.c. gloss cream	EA	$10.85	$1.08	10	160
XL770/1WEMS	Switch 1 gang 2 way 10A 240V a.c. white/matt silver	EA	$15.87	$1.59	10	160
XL770/1BLMS	Switch 1 gang 2 way 10A 240V a.c. black/matt silver	EA	$15.87	$1.59	10	160
XL770/2WE	Switch 2 gang 2 way 10A 240V a.c. white	EA	$17.53	$1.75	10	160
XLP770/2WEWE	Switch 2 gang 2 way 10A 240V a.c. gloss white	EA	$17.53	$1.75	10	160
XL770/2BL	Switch 2 gang 2 way 10A 240V a.c. black	EA	$17.53	$1.75	10	160
XLP770/2BLBL	Switch 2 gang 2 way 10A 240V a.c. gloss black	EA	$17.53	$1.75	10	160
XL770/2CR	Switch 2 gang 2 way 10A 240V a.c. cream	EA	$17.53	$1.75	10	160
XLP770/2CRCR	Switch 2 gang 2 way 10A 240V a.c. gloss cream	EA	$17.53	$1.75	10	160
XL770/3WE	Switch 3 gang 2 way 10A 240V a.c. white	EA	$30.40	$3.04	10	160
XLP770/3WEWE	Switch 3 gang 2 way 10A 240V a.c. gloss white	EA	$30.40	$3.04	10	160
XL770/3BL	Switch 3 gang 2 way 10A 240V a.c. black	EA	$30.40	$3.04	10	160
XLP770/3BLBL	Switch 3 gang 2 way 10A 240V a.c. gloss black	EA	$30.40	$3.04	10	160
XL770/3CR	Switch 3 gang 2 way 10A 240V a.c. cream	EA	$30.40	$3.04	10	160
XLP770/3CRCR	Switch 3 gang 2 way 10A 240V a.c. gloss cream	EA	$30.40	$3.04	10	160
XL770/4WE	Switch 4 gang 2 way 10A 240V a.c. white	EA	$47.39	$4.74	10	160
XLP770/4WEWE	Switch 4 gang 2 way 10A 240V a.c. gloss white	EA	$47.39	$4.74	10	160
XL770/4BL	Switch 4 gang 2 way 10A 240V a.c. black	EA	$47.39	$4.74	10	160
XLP770/4BLBL	Switch 4 gang 2 way 10A 240V a.c. gloss black	EA	$47.39	$4.74	10	160
XL770/4CR	Switch 4 gang 2 way 10A 240V a.c. cream	EA	$47.39	$4.74	10	160
XLP770/4CRCR	Switch 4 gang 2 way 10A 240V a.c. gloss cream	EA	$47.39	$4.74	10	160
XL770/5WE	Switch 5 gang 2 way 10A 240V a.c. white	EA	$66.96	$6.70	10	160
XLP770/5WEWE	Switch 5 gang 2 way 10A 240V a.c. gloss white	EA	$66.96	$6.70	10	160
XL770/5BL	Switch 5 gang 2 way 10A 240V a.c. black	EA	$66.96	$6.70	10	160
XLP770/5BLBL	Switch 5 gang 2 way 10A 240V a.c. gloss black	EA	$66.96	$6.70	10	160
XL770/5CR	Switch 5 gang 2 way 10A 240V a.c. cream	EA	$66.96	$6.70	10	160
XLP770/5CRCR	Switch 5 gang 2 way 10A 240V a.c. gloss cream	EA	$66.96	$6.70	10	160
XL770/6WE	Switch 6 gang 2 way 10A 240V a.c. white	EA	$78.78	$7.88	10	160

N New product | ECO Energy Saving products | More info available. See technical pages | COMING SOON Coming soon | Product to be discontinued

Whilst most items are stock lines some products are made to order. UoM = Unit Of Measure.
Prices are effective 1 June 2017 and are subject to change without notice. Trade prices exclude GST.

Excel

Switches

XL770/6CR

XLP1036PWEWE

XLW770V1WE

XL400TBL

Cat.Nos	Vertical switches	UoM	Trade price $	GST $	Box qty	Carton qty
	Rocker switches - Single Pole Double Throw (SPDT)					
XLP770/6WEWE	Switch 6 gang 2 way 10A 240V a.c. gloss white	EA	$78.78	$7.88	10	160
XL770/6BL	Switch 6 gang 2 way 10A 240V a.c. black	EA	$78.78	$7.88	10	160
XLP770/6BLBL	Switch 6 gang 2 way 10A 240V a.c. gloss black	EA	$78.78	$7.88	10	160
XL770/6CR	Switch 6 gang 2 way 10A 240V a.c. cream	EA	$78.78	$7.88	10	160
XLP770/6CRCR	Switch 6 gang 2 way 10A 240V a.c. gloss cream	EA	$78.78	$7.88	10	160
	Heavy duty rocker switches					
XL1036WE	Switch 1 gang 2 way 40A 240V a.c. white	EA	$39.67	$3.97	10	160
XLP1036WEWE	Switch 1 gang 2 way 40A 240V a.c. gloss white	EA	$39.67	$3.97	10	160
XL1036BL	Switch 1 gang 2 way 40A 240V a.c. black	EA	$39.67	$3.97	10	160
XL1036PWE	Switch 1 gang 2 way double pole 40A 240V a.c. white	EA	$48.44	$4.84	10	160
XLP1036PWEWE	Switch 1 gang 2 way double pole 40A 240V a.c. gloss white	EA	$48.44	$4.84	10	160
XL1036PBL	Switch 1 gang 2 way double pole 40A 240V a.c. black	EA	$48.44	$4.84	10	160
XLP1036PBLBL	Switch 1 gang 2 way double pole 40A 240V a.c. gloss black	EA	$48.44	$4.84	10	160
XL1036NWE	Switch 1 gang 2 way 40A 240V a.c. with neon white	EA	$54.43	$5.44	10	160
XLP1036NWEWE	Switch 1 gang 2 way 40A 240V a.c. with neon gloss white	EA	$54.43	$5.44	10	160
XL1036PNWE	Switch 1 gang 2 way double pole 40A 240V a.c. with neon white	EA	$76.39	$7.64	10	160
	Weatherproof switches - Single Pole Double Throw (SPDT)					
XLW770V1WE	Switch 1 gang 2 way IP56 10A 240V a.c. white	EA	$31.06	$3.11	3	200
XLPW770V1WEWE	Switch 1 gang 2 way IP56 10A 240V a.c. gloss white	EA	$31.06	$3.11	3	200
XLW770V1BL	Switch 1 gang 2 way IP56 10A 240V a.c. black	EA	$31.06	$3.11	3	200
XLW770V2WE	Switch 2 gang 2 way IP56 10A 240V a.c. white	EA	$42.42	$4.24	3	200
XLPW770V2WEWE	Switch 2 gang 2 way IP56 10A 240V a.c. gloss white	EA	$42.42	$4.24	3	200
XLW770V2BL	Switch 2 gang 2 way IP56 10A 240V a.c. black	EA	$42.42	$4.24	3	200
	Rotary dimmers					
XL250TWE	Rotary dimmer trailing edge 2 wire 250VA 240V a.c. white	EA	$54.94	$5.49	3	108
XLP250TWEWE	Rotary dimmer trailing edge 2 wire 250VA 240V a.c. gloss white	EA	$54.94	$5.49	3	108
XL250TBL	Rotary dimmer trailing edge 2 wire 250VA 240V a.c. black	EA	$54.94	$5.49	3	108
XL400TWE	Rotary dimmer trailing edge 2 wire 400VA 240V a.c. white	EA	$83.83	$8.38	3	108
XLP400TWEWE	Rotary dimmer trailing edge 2 wire 400VA 240V a.c. gloss white	EA	$83.83	$8.38	3	108
XL400TBL	Rotary dimmer trailing edge 2 wire 400VA 240V a.c. black	EA	$83.83	$8.38	3	108
XL400TCR	Rotary dimmer trailing edge 2 wire 400VA 240V a.c. cream	EA	$83.83	$8.38	3	108
XL700TWE	Rotary dimmer trailing edge 2 wire 700VA 240V a.c. white	EA	$125.58	$12.56	3	108
XLP700TWEWE	Rotary dimmer trailing edge 2 wire 700VA 240V a.c. gloss white	EA	$125.58	$12.56	3	108

N New product | ECO Energy Saving products | More info available. See technical pages | COMING SOON Coming soon | Product to be discontinued

Whilst most items are stock lines some products are made to order. UoM = Unit Of Measure.
Prices are effective 1 June 2017 and are subject to change without notice. Trade prices exclude GST.

Excel

Switches

XLP400LWEWE

XL2000ERCWE

XL700LWE

XL1000LWE

XL475/2

XL650ETWE

Cat.Nos	Vertical switches	UoM	Trade price $	GST $	Box qty	Carton qty
	Rotary dimmers					
XL1000TWE	Rotary dimmer trailing edge 2 wire 1000VA 240V a.c. white	EA	$197.91	$19.79	3	108
XLP1000TWEWE	Rotary dimmer trailing edge 2 wire 1000VA 240V a.c. gloss white	EA	$197.91	$19.79	3	108
XL1000ERCWE	Rotary dimmer trailing edge 2 wire remote controlled 1000VA 240V a.c. white	EA	$263.01	$26.30	3	108
XLP1000ERCWEWE	Rotary dimmer trailing edge 2 wire 1000VA 240V a.c. gloss white	EA	$263.01	$26.30	3	108
XL2000ERCWE	Rotary dimmer trailing edge 2 wire remote controlled 2000VA 240V a.c. white	EA	$468.30	$46.83	3	108
XLP2000ERCWEWE	Rotary dimmer trailing edge 2 wire remote controlled 2000VA 240V a.c. gloss white	EA	$468.30	$46.83	3	108
XL250LWE	Rotary dimmer leading edge 2 wire 250VA 240V a.c. white	EA	$52.15	$5.22	3	108
XLP250LWEWE	Rotary dimmer leading edge 2 wire 250VA 240V a.c. gloss white	EA	$52.15	$5.22	3	108
XL250LBL	Rotary dimmer leading edge 2 wire 250VA 240V a.c. black	EA	$52.15	$5.22	3	108
XL400LWE	Rotary dimmer leading edge 2 wire 400VA 240V a.c. white	EA	$71.12	$7.11	3	108
XLP400LWEWE	Rotary dimmer leading edge 2 wire 400VA 240V a.c. gloss white	EA	$71.12	$7.11	3	108
XL400LBL	Rotary dimmer leading edge 2 wire 400VA 240V a.c. black	EA	$71.12	$7.11	3	108
XL400LCR	Rotary dimmer leading edge 2 wire 400VA 240V a.c. cream	EA	$71.12	$7.11	3	108
XL700LWE	Rotary dimmer leading edge 2 wire 700VA 240V a.c. white	EA	$126.56	$12.66	3	108
XLP700LWEWE	Rotary dimmer leading edge 2 wire 700VA 240V a.c. gloss white	EA	$126.56	$12.66	3	108
XL1000LWE	Rotary dimmer leading edge 2 wire 1000VA 240V a.c. white	EA	$211.17	$21.12	3	108
XLP1000LWEWE	Rotary dimmer leading edge 2 wire 1000VA 240V a.c. gloss white	EA	$211.17	$21.12	3	108
	Rotary fan controllers					
XL300FWE	Fan controller 300VA white	EA	$65.00	$6.50	3	64
XLP300FWEWE	Fan controller 300VA gloss white	EA	$65.00	$6.50	3	64
XL300FBL	Fan controller 300VA black	EA	$65.00	$6.50	3	64
XL475/2	Fan controller 3 speed 100VA 1.5μF+2.5μF capacitors white	EA	$72.35	$7.24	3	64
XLP475/2WEWE	Fan controller 3 speed 100VA 1.5μF+2.5μF capacitors gloss white	EA	$72.35	$7.24	3	64
XL650ETWE	Fan controller 3 speed 650VA Timer auto OFF after 2hrs white	EA	$152.27	$15.23	3	64

N New product | ECO Energy Saving products | More info available. See technical pages | Coming soon | Product to be discontinued

Whilst most items are stock lines some products are made to order. UoM = Unit Of Measure.
Prices are effective 1 June 2017 and are subject to change without notice. Trade prices exclude GST.

Excel

Switches

XL770TWE

XLTF770/1WE

XL770EL10N2WE

XL770/1HWE

XLP770/2HWEWE

Cat.Nos	Vertical switches	UoM	Trade price $	GST $	Box qty	Carton qty
	Time-delay switches					
XL770TWE	Timer switch 500VA 240V a.c. white	EA	$150.99	$15.10	3	-
XLP770TWEWE	Timer switch 2 way 500VA 240V a.c. gloss white	EA	$150.99	$15.10	3	-
XLTD770/1WE	Timer 1/3/10mn 2 wire 600VA 240V a.c. white	EA	$109.30	$10.93	3	-
XLTF770/1WE	Fan time-delay 3/10/20mn 2 wire 600VA 240V a.c. white	EA	$108.39	$10.84	3	-
XLTX770/1AWE	Timer 1s-239hr push start / restart 2 wire 2400VA 240V a.c. white	EA	$167.76	$16.78	3	-
XLTX770/1NCWE	Timer 1s-239hr 3 wire 2400VA 240V a.c. NC contacts white	EA	$127.25	$12.72	3	-
XLTX770/1WE	Timer 1s-239hr push start / restart 3 wire 2400VA 240V a.c. white	EA	$127.22	$12.72	3	-
XLTX770/2AWE	Timer 1s-239hr 2 wire 2400VA 240V a.c. white	EA	$167.76	$16.78	3	-
XLTX770/2NCWE	Timer 1s-239hr push start / push stop 3 wire 2400VA 240V a.c. NC contacts white	EA	$127.25	$12.72	3	-
XLTX770/2WE	Timer 1s-239hr push start / push stop 3 wire 2400VA 240V a.c. white	EA	$127.25	$12.72	3	-
XLTX770/3WE	Repeat cycle timer 15s -24hr 3 wire 2400VA 240V a.c. white	EA	$127.25	$12.72	3	-
	RCD protected switches					
XL770EL10WE	Switch 240V a.c. with RCD 10mA white	EA	$210.05	$21.00	10	100
XL770EL10N1WE	Switch 240V a.c. with RCD & neon 10mA white	EA	$217.26	$21.73	10	100
XL770EL10N2WE	Switch 240V a.c. with RCD & 2 neons 10mA white	EA	$231.72	$23.17	10	100
XL770EL30WE	Switch 240V a.c. with RCD 30mA white	EA	$185.43	$18.54	10	100

	Horizontal switches					
	Rocker switches - Single Pole Double Throw (SPDT)					
XL770/1HWE	Switch 1 gang 2 way 10A 240V a.c. white	EA	$10.85	$1.08	10	160
XLP770/1HWEWE	Switch 1 gang 2 way 10A 240V a.c. gloss white	EA	$10.85	$1.08	10	160
XL770/1HCR	Switch 1 gang 2 way 10A 240V a.c. cream	EA	$10.85	$1.08	10	160
XL770/1HBE	Switch 1 gang 2 way 10A 240V a.c. beige	EA	$10.85	$1.08	10	160
XL770/2HWE	Switch 2 gang 2 way 10A 240V a.c. white	EA	$17.53	$1.75	10	160
XLP770/2HWEWE	Switch 2 gang 2 way 10A 240V a.c. gloss white	EA	$17.53	$1.75	10	160
XL770/2HCR	Switch 2 gang 2 way 10A 240V a.c. cream	EA	$17.53	$1.75	10	160
XL770/2HBE	Switch 2 gang 2 way 10A 240V a.c. beige	EA	$17.53	$1.75	10	160
XL770/3HWE	Switch 3 gang 2 way 10A 240V a.c. white	EA	$30.40	$3.04	10	160
XLP770/3HWEWE	Switch 3 gang 2 way 10A 240V a.c. gloss white	EA	$30.40	$3.04	10	160
XL770/3HBE	Switch 3 gang 2 way 10A 240V a.c. beige	EA	$30.40	$3.04	10	160
XL770/4HWE	Switch 4 gang 2 way 10A 240V a.c. white	EA	$47.39	$4.74	10	160
XLP770/4HWE	Switch 4 gang 2 way 10A 240V a.c. gloss white	EA	$47.39	$4.74	10	160
XL770/5HWE	Switch 5 gang 2 way 10A 240V a.c. white	EA	$66.96	$6.70	10	160
XLP770/5HWEWE	Switch 5 gang 2 way 10A 240V a.c. gloss white	EA	$66.96	$6.70	10	160
XL770/6HWE	Switch 6 gang 2 way 10A 240V a.c. white	EA	$78.78	$7.88	10	160
XLP770/6HWEWE	Switch 6 gang 2 way 10A 240V a.c. gloss white	EA	$78.78	$7.88	10	160

N New product | ECO Energy Saving products | More info available. See technical pages | Coming soon | Product to be discontinued

Whilst most items are stock lines some products are made to order. UoM = Unit Of Measure.
Prices are effective 1 June 2017 and are subject to change without notice. Trade prices exclude GST.

Excel

Switches

XLW770H1WE

XLW770H1BL

XL770THWE

XLA770/1WE

XLA770/2BL

XLA770/3CR

Cat.Nos	Horizontal switches	UoM	Trade price $	GST $	Box qty	Carton qty
	Weatherproof switches - Single Pole Double Throw (SPDT)					
XLW770H1WE	Switch horizontal 1 gang 2 way IP56 10A 240V a.c. white	EA	$31.06	$3.11	3	-
XLPW770H1WEWE	Switch horizontal 1 gang 2 way IP56 10A 240V a.c. gloss white	EA	$31.06	$3.11	3	-
XLW770H1BL	Switch horizontal 1 gang 2 way IP56 10A 240V a.c. black	EA	$31.06	$3.11	3	-
XLW770H2WE	Switch horizontal 2 gang 2 way IP56 10A 240V a.c. white	EA	$42.42	$4.24	3	-
XLW770H2BL	Switch horizontal 2 gang 2 way IP56 10A 240V a.c. black	EA	$42.42	$4.24	3	-
XLPW770H2WEWE	Switch horizontal 2 gang 2 way IP56 10A 240V a.c. gloss white	EA	$42.42	$4.24	3	-
	Time-delay switches					
XL770THWE	Timer switch 500VA 240V a.c. white	EA	$150.99	$15.10	3	-
XLP770THWEWE	Timer switch 1 gang 2 way 500VA 240V a.c. gloss white	EA	$150.99	$15.10	3	-
	Architrave					
	Rocker switches - Single Pole Double Throw (SPDT)					
XLA770/1WE	Architrave switch 1 gang 2 way 10A 240V a.c. white	EA	$9.95	$1.00	10	160
XLA770/1BL	Architrave switch 1 gang 2 way 10A 240V a.c. black	EA	$9.95	$1.00	10	160
XLA770/1CR	Architrave switch 1 gang 2 way 10A 240V a.c. cream	EA	$9.95	$1.00	10	160
XLA770/2WE	Architrave switch 2 gang 2 way 10A 240V a.c. white	EA	$25.91	$2.59	10	320
XLA770/2BL	Architrave switch 2 gang 2 way 10A 240V a.c. black	EA	$25.91	$2.59	10	160
XLA770/2CR	Architrave switch 2 gang 2 way 10A 240V a.c. cream	EA	$25.91	$2.59	10	160
XLA770/3WE	Architrave switch 3 gang 2 way 10A 240V a.c. white	EA	$40.77	$4.08	10	160
XLA770/3BL	Architrave switch 3 gang 2 way 10A 240V a.c. black	EA	$40.77	$4.08	10	160
XLA770/3CR	Architrave switch 3 gang 2 way 10A 240V a.c. cream	EA	$40.77	$4.08	10	160
XLA770/4WE	Architrave switch 4 gang 2 way 10A 240V a.c. white	EA	$63.76	$6.38	10	160
XLA770/4BL	Architrave switch 4 gang 2 way 10A 240V a.c. black	EA	$63.76	$6.38	10	160
XLA770/4CR	Architrave switch 4 gang 2 way 10A 240V a.c. cream	EA	$63.76	$6.38	10	160

N New product | ECO Energy Saving products | More info available. See technical pages | COMING SOON Coming soon | Product to be discontinued

Whilst most items are stock lines some products are made to order. UoM = Unit Of Measure.
Prices are effective 1 June 2017 and are subject to change without notice. Trade prices exclude GST.

Excel

Switches

XLP924WEWE

XLP927WEWE

XLP940WEWE

XLP915WEWE

XLP914WEWE

XLP919WEWE

Cat.Nos	Special application devices	UoM	Trade price $	GST $	Box qty	Carton qty
	Hotel room indicators					
XLP924WEWE	Room indicator white	EA	$92.43	$9.24	5	-
XLP925WEWE	Room control lamp and bell white	EA	$53.23	$5.32	5	-
	Illuminated signs					
XLP926WEWE	Illuminated sign white neon white	EA	$53.23	$5.32	5	-
XLP927WEWE	Illuminated sign blue neon white	EA	$42.01	$4.20	5	-
XLP928WEWE	Illuminated sign green/red neon white	EA	$47.62	$4.76	5	-
	Skirting lights					
XLP939WEWE	Skirting light permanent white	EA	$64.43	$6.44	5	-
XLP940WEWE	Skirting light PIR sensor and sound 230V a.c. white	EA	$308.08	$30.81	5	-
XLP941WEWE	Safety light (in case of power failure) white	EA	$131.65	$13.16	5	-
	Automatic lights					
XL632	Automatic light switch vertical 2 way 600VA 240V a.c. manual override white	EA	$99.30	$9.93	3	-
XLP632WEWE	Automatic light switch vertical 2 way 600VA 240V a.c. manual override gloss white	EA	$104.13	$10.41	3	-
	Buzzers					
XLP917WEWE	Buzzer horizontal 240V a.c. gloss white	EA	$109.22	$10.92	5	-
XLP918WEWE	Buzzer horizontal electronic 12/24/48V a.c. gloss white	EA	$154.07	$15.41	5	-
	Emergency switches					
XLP915WEWE	Emergency stop horizontal mushroom 240V a.c. gloss white	EA	$33.64	$3.36	5	-
	Movement sensor switches					
XLP912WEWE	Movement sensor switch horizontal infrared 3 wire 1000W 240V a.c. white	EA	$168.05	$16.80	5	-
XLP913WEWE	Movement sensor switch horizontal infrared 2 wire 400W 240V a.c. white	EA	$168.05	$16.80	5	-
	No touch switch					
XLP914WEWE	No touch switch horizontal 240V a.c. white	EA	$189.21	$18.92	5	-
	Shutter switches					
XLP919WEWE	Roller blind switch vertical relay control 240V a.c. white	EA	$53.23	$5.32	5	-
XLP920WEWE	Roller blind switch vertical direct control 240V a.c. white	EA	$53.23	$5.32	5	-
	Temperature control switches					
XLP921WEWE	Thermostat vertical HVAC 240V a.c. white	EA	$277.30	$27.73	5	-

N New product | ECO Energy Saving products | More info available. See technical pages | COMING SOON Coming soon | Product to be discontinued

Whilst most items are stock lines some products are made to order. UoM = Unit Of Measure.
Prices are effective 1 June 2017 and are subject to change without notice. Trade prices exclude GST.

Excel

Switches

XL770KM1WE

XL770/1KLIOWE

XL770KT10WE

Cat.Nos	Hospitality	UoM	Trade price $	GST $	Box qty	Carton qty
	Keycard switches					
XL770KM1WE	Keycard switch 2 x 20A 240V a.c. white	EA	$200.31	$20.03	10	-
XL770KM2WE	Keycard switch with 10A indep. switch 2 x 20A 240V a.c. white	EA	$211.23	$21.12	10	-
XL770KM3WE	Keycard switch with 10A indep. switch 2 x 20A 240V a.c. with base pocket neon white	EA	$225.71	$22.57	10	-
XL770KM7WE	Keycard switch 2 x 20A 240V a.c. with neon white	EA	$198.14	$19.81	10	-
XL770KM8WE	Keycard switch with 10A indep. switch 2 x 20A 240V a.c. with top pocket neon white	EA	$211.23	$21.12	10	-
XL770KM9WE	Keycard switch with 10A indep. switch with neon 2 x 20A 240V a.c. with top pocket neon white	EA	$248.30	$24.83	10	-
	Keylock switches					
XL770/1KLIOWE	Keylock switch 10A 240V a.c. removable ON & OFF position white	EA	$110.23	$11.02	10	-
XLP770/1KLIOWEW	Keylock switch 10A 240V a.c. removable ON & OFF position gloss white	EA	$110.23	$11.02	10	-
XL770/1KLOWE	Keylock switch 10A 240V a.c. removable OFF position white	EA	$110.23	$11.02	10	-
XLP770/1KLOWEWE	Keylock switch 10A 240V a.c. removable OFF position gloss white	EA	$110.23	$11.02	10	-
	Keytag switches					
XL770VCKT1	Keytag switch 2 x 20A 240V a.c. in base pocket with neon white	EA	$212.38	$21.24	10	-
XL770VCKT10	Keytag switch 3 x 20A 240V a.c. in top pocket white	EA	$212.38	$21.24	10	-
XL770VCKT12	Keytag switch 10A indep. switch 3 x 20A 240V a.c. in top pocket with neon white	EA	$254.07	$25.41	10	-
XL770VCKT13	Keytag switch 3 x 20A 240V a.c. in base pocket with neon white	EA	$235.52	$23.55	10	-
XL770VCKT14	Keytag switch 4 x 20A 240V a.c. in base pocket white	EA	$245.11	$24.51	10	-
XL770VCKT15	Keytag switch 3 x 20A 240V a.c. in top pocket with neon white	EA	$235.52	$23.55	10	-
XL770VCKT16	Keytag switch 4 x 20A 240V a.c. in top pocket white	EA	$245.11	$24.51	10	-
XL770VCKT3	Keytag switch 10A indep. switch 2 x 20A 240V a.c. in base pocket with neon white	EA	$254.07	$25.41	10	-
XL770VCKT4	Keytag switch 3 x 20A 240V a.c. in base pocket white	EA	$212.38	$21.24	10	-
XL770VCKT5	Keytag switch 10A indep. switch 3 x 20A 240V a.c. in base pocket white	EA	$222.65	$22.26	10	-
XL770VCKT6	Keytag switch 10A indep. switch 3 x 20A 240V a.c. in base pocket with neon white	EA	$254.07	$25.41	10	-
XL770VCKT7	Keytag switch 2 x 20A 240V a.c. in top pocket with neon white	EA	$212.38	$21.24	10	-
XL770VCKT8	Keytag switch 10A indep. switch 2 x 20A 240V a.c. in top pocket with neon white	EA	$222.65	$22.26	10	-
XL770KT10WE	Keytag switch 3 x 20A 240V a.c. in top pocket white	EA	$205.68	$20.57	10	-
XL770KT11WE	Keytag switch 10A indep. switch 3 x 20A 240V a.c. in top pocket white	EA	$215.60	$21.56	10	-
XL770KT12WE	Keytag switch 10A indep. switch 3 x 20A 240V a.c. in top pocket with neon white	EA	$251.02	$25.10	10	-
XL770KT13WE	Keytag switch 3 x 20A 240V a.c. in base pocket with neon white	EA	$230.79	$23.08	10	-
XL770KT14WE	Keytag switch 4 x 20A 240V a.c. in base pocket white	EA	$239.25	$23.92	10	-
XL770KT15WE	Keytag switch 3 x 20A 240V a.c. in top pocket with neon white	EA	$241.40	$24.14	10	-

N New product | ECO Energy Saving products | More info available. See technical pages | COMING SOON Coming soon | Product to be discontinued

Whilst most items are stock lines some products are made to order. UoM = Unit Of Measure.
Prices are effective 1 June 2017 and are subject to change without notice. Trade prices exclude GST.

Excel

Switches

XL770KT1WE

D5MWE

D5MBL

Cat.Nos	Hospitality	UoM	Trade price $	GST $	Box qty	Carton qty
	Keytag switches					
XL770KT1WE	Keytag switch 2 x 20A 240V a.c. in base pocket with neon white	EA	$205.68	$20.57	10	-
XL770KT2WE	Keytag switch 10A indep. switch 2 x 20A 240V a.c. white	EA	$215.60	$21.56	10	-
XL770KT3WE	Keytag switch 10A indep. switch 2 x 20A 240V a.c. with neon white	EA	$245.97	$24.60	10	-
XL770KT4WE	Keytag switch 3 x 20A 240V a.c. in base pocket white	EA	$205.68	$20.57	10	-
XL770KT5WE	Keytag switch 10A indep. switch 3 x 20A 240V a.c. in base pocket white	EA	$215.60	$21.56	10	-
XL770KT6WE	Keytag switch 10A indep. switch 3 x 20A 240V a.c. in base pocket with neon white	EA	$251.02	$25.10	10	-
XL770KT7WE	Keytag switch 2 x 20A 240V a.c. in top pocket with neon white	EA	$205.68	$20.57	10	-
XL770KT8WE	Keytag switch 10A indep. switch 2 x 20A 240V a.c. in top pocket with neon white	EA	$215.60	$21.56	10	-
XL770KT16WE	Keytag switch 4 x 20A 240V a.c. in top pocket white	EA	$239.25	$23.92	10	-
	Cordline switches					
D5MWE	Cordline switch for 3-core or figure-8 wiring double pole 10A white	EA	$17.38	$1.74	10	400
D5MBL	Cordline switch for 3-core or figure-8 wiring double pole 10A black	EA	$17.38	$1.74	10	400

N New product | ECO Energy Saving products | More info available. See technical pages | COMING SOON Coming soon | Product to be discontinued

Whilst most items are stock lines some products are made to order. UoM = Unit Of Measure.
Prices are effective 1 June 2017 and are subject to change without notice. Trade prices exclude GST.

Excel

Powerpoints

XL787WE

XLP787XWEWE

XL787/2XWE

XL787SCR

Cat.Nos	Horizontal powerpoints	UoM	Trade price $	GST $	Box qty	Carton qty
	Single powerpoints					
XL787WE	Powerpoint 1 gang 10A 240V a.c. white	EA	$14.41	$1.44	10	160
XLP787WEWE	Powerpoint 1 gang 10A 240V a.c. gloss white	EA	$14.41	$1.44	10	160
XL787BL	Powerpoint 1 gang 10A 240V a.c. black	EA	$14.41	$1.44	10	160
XLP787BLBL	Powerpoint 1 gang 10A 240V a.c. gloss black	EA	$14.41	$1.44	10	160
XL787CR	Powerpoint 1 gang 10A 240V a.c. cream	EA	$14.41	$1.44	10	160
XLP787CRCR	Powerpoint 1 gang 10A 240V a.c. gloss cream	EA	$14.41	$1.44	10	160
XL787XWE	Powerpoint 1 gang 10A 240V a.c. with extra switch white	EA	$31.66	$3.17	10	160
XLP787XWEWE	Powerpoint 1 gang 10A 240V a.c. with extra switch gloss white	EA	$31.66	$3.17	10	160
XL787XBL	Powerpoint 1 gang 10A 240V a.c. with extra switch black	EA	$31.66	$3.17	10	160
XL787XCR	Powerpoint 1 gang 10A 240V a.c. with extra switch cream	EA	$31.66	$3.17	10	160
XLP787XCRCR	Powerpoint 1 gang 10A 240V a.c. with extra switch gloss cream	EA	$31.66	$3.17	10	160
XLP787XBEBE	Powerpoint 1 gang 10A 240V a.c. with extra switch gloss beige	EA	$31.66	$3.17	10	160
XL787/2XWE	Powerpoint 1 gang 10A 240V a.c. with 2 extra switches white	EA	$56.71	$5.67	10	160
XLP787/2XWEWE	Powerpoint 1 gang 10A 240V a.c. with 2 extra switches gloss white	EA	$56.71	$5.67	10	160
XL787/2XBL	Powerpoint 1 gang 10A 240V a.c. with 2 extra switches black	EA	$56.71	$5.67	10	160
XL787/2XCR	Powerpoint 1 gang 10A 240V a.c. with 2 extra switches cream	EA	$56.71	$5.67	10	160
XL787SWE	Powerpoint 1 gang 10A 240V a.c. with safety shutters white	EA	$33.69	$3.37	10	160
XLP787SWEWE	Powerpoint 1 gang 10A 240V a.c. with safety shutters gloss white	EA	$33.69	$3.37	10	160
XL787SBL	Powerpoint 1 gang 10A 240V a.c. with safety shutters black	EA	$33.69	$3.37	10	160
XLP787SBLBL	Powerpoint 1 gang 10A 240V a.c. with safety shutters gloss black	EA	$33.69	$3.37	10	160
XL787SCR	Powerpoint 1 gang 10A 240V a.c. with safety shutters cream	EA	$33.69	$3.37	10	160
XL787XSWE	Powerpoint 1 gang 10A 240V a.c. with extra switch & safety shutters white	EA	$56.97	$5.70	10	160
XLP787XSWEWE	Powerpoint 1 gang 10A 240V a.c. with extra switch & safety shutters gloss white	EA	$56.97	$5.70	10	160
XL787NSWE	Powerpoint 1 gang 10A 240V a.c. with safety shutters & neon white	EA	$56.28	$5.63	10	160
XL787NSBL	Powerpoint 1 gang 10A 240V a.c. with safety shutters & neon black	EA	$56.28	$5.63	10	160
XL787XNSBE	Powerpoint 1 gang 10A 240V a.c. with extra switch, safety shutters & neon beige	EA	$84.55	$8.46	10	160
XL787RWE	Powerpoint 1 gang 10A 240V a.c. with round earth white	EA	$57.44	$5.74	10	160
XLP787RWEWE	Powerpoint 1 gang 10A 240V a.c. with round earth gloss white	EA	$57.44	$5.74	10	160
XL787RBL	Powerpoint 1 gang 10A 240V a.c. with round earth black	EA	$57.44	$5.74	10	160
XL787RBE	Powerpoint 1 gang 10A 240V a.c. with round earth beige	EA	$57.44	$5.74	10	160
XL787RCR	Powerpoint 1 gang 10A 240V a.c. with round earth cream	EA	$57.44	$5.74	10	160

N New product | ECO Energy Saving products | More info available. See technical pages | COMING SOON Coming soon | Product to be discontinued

Whilst most items are stock lines some products are made to order. UoM = Unit Of Measure.
Prices are effective 1 June 2017 and are subject to change without notice. Trade prices exclude GST.

Excel

Powerpoints

XL787XRWE

XL787IDWE

XL787/25BL

XL787/15SWE

Cat.Nos	Horizontal powerpoints	UoM	Trade price $	GST $	Box qty	Carton qty
	Single powerpoints					
XL787PWE	Powerpoint 1 gang double pole 10A 240V a.c. white	EA	$35.57	$3.56	10	160
XL787PRWE	Powerpoint 1 gang double pole 10A 240V a.c. with round earth white	EA	$38.53	$3.85	10	160
XL787XRWE	Powerpoint 1 gang 10A 240V a.c. with extra switch & round earth white	EA	$55.11	$5.51	10	160
XL787RSWE	Powerpoint 1 gang 10A 240V a.c. with safety shutters & round earth white	EA	$60.77	$6.08	10	160
XL787XNVWE	Powerpoint 2 gang 10A 240V a.c. with extra switch no-volt white	EA	$285.96	$28.60	10	160
XL787IDWE	Powerpoint 1 gang 10A 240V a.c. with circuit ID white	EA	$37.11	$3.71	10	160
XL787IDCLWE	Powerpoint 1 gang 10A 240V a.c. with clear circuit ID white	EA	$36.23	$3.62	10	160
XLP787IDCLWEWE	Powerpoint 1 gang 10A 240V a.c. with clear circuit ID gloss white	EA	$36.23	$3.62	10	160
XL787IDCLBL	Powerpoint 1 gang 10A 240V a.c. With clear circuit ID black	EA	$36.23	$3.62	10	160
XL787/15WE	Powerpoint 1 gang 15A 240V a.c. white	EA	$29.73	$2.97	10	160
XLP787/15WEWE	Powerpoint 1 gang 15A 240V a.c. gloss white	EA	$29.73	$2.97	10	160
XL787/15BL	Powerpoint 1 gang 15A 240V a.c. black	EA	$29.73	$2.97	10	160
XL787/15CR	Powerpoint 1 gang 15A 240V a.c. cream	EA	$29.73	$2.97	10	160
XL787X15WE	Powerpoint 1 gang 15A 240V a.c. with extra switch white	EA	$40.60	$4.06	10	160
XL787/15SWE	Powerpoint 1 gang 15A 240V a.c. with safety shutters white	EA	$57.78	$5.78	10	160
XLP787/15SWEWE	Powerpoint 1 gang 15A 240V a.c. with safety shutters gloss white	EA	$57.78	$5.78	10	160
XLP787/15SBLBL	Powerpoint 1 gang 15A 240V a.c. with safety shutters gloss black	EA	$57.78	$5.78	10	160
XL787/15SBL	Powerpoint 1 gang 15A 240V a.c. with safety shutters black	EA	$57.78	$5.78	10	160
XL787/15NSWE	Powerpoint 1 gang 15A 240V a.c. with safety shutters & neon white	EA	$70.40	$7.04	10	160
XL787/20WE	Powerpoint 1 gang 20A 240V a.c. white	EA	$37.43	$3.74	10	160
XLP787/20WEWE	Powerpoint 1 gang 20A 240V a.c. gloss white	EA	$37.43	$3.74	10	160
XL787/20BL	Powerpoint 1 gang 20A 240V a.c. black	EA	$37.43	$3.74	10	160
XLP787/20BLBL	Powerpoint 1 gang 20A 240V a.c. gloss black	EA	$37.43	$3.74	10	160
XL787/20NWE	Powerpoint 1 gang 20A 240V a.c. with neon white	EA	$80.38	$8.04	10	160
XL787/25WE	Powerpoint 1 gang 25A 240V a.c. white	EA	$72.43	$7.24	10	160
XLP787/25WEWE	Powerpoint 1 gang 25A 240V a.c. gloss white	EA	$72.43	$7.24	10	160
XL787/25BL	Powerpoint 1 gang 25A 240V a.c. black	EA	$72.43	$7.24	10	160
XLP787/25BLBL	Powerpoint 1 gang 25A 240V a.c. gloss black	EA	$72.43	$7.24	10	160
XL787/25NWE	Powerpoint 1 gang 25A 240V a.c. with neon white	EA	$111.65	$11.16	10	160
XL787/32WE	Powerpoint 1 gang 32A 240V a.c. white	EA	$68.89	$6.89	10	160

N New product | ECO Energy Saving products | More info available. See technical pages | COMING SOON Coming soon | Product to be discontinued

Whilst most items are stock lines some products are made to order. UoM = Unit Of Measure.
Prices are effective 1 June 2017 and are subject to change without notice. Trade prices exclude GST.

Excel

Powerpoints

XL777WE

XL777CR

XL777RED

XL777XWE

XLP777XBLBL

XLP777ESWEWE

Cat.Nos	Horizontal powerpoints	UoM	Trade price $	GST $	Box qty	Carton qty
	Double powerpoints					
XL777WE	Powerpoint 2 gang 10A 240V a.c. white	EA	$21.19	$2.12	10	120
XLP777WEWE	Powerpoint 2 gang 10A 240V a.c. gloss white	EA	$21.19	$2.12	10	120
XL777WEMS	Powerpoint 2 gang 10A 240V a.c. white/matt silver	EA	$29.59	$2.96	10	120
XL777BL	Powerpoint 2 gang 10A 240V a.c. black	EA	$23.07	$2.31	10	120
XLP777BLBL	Powerpoint 2 gang 10A 240V a.c. gloss black	EA	$23.06	$2.31	10	120
XL777BLMS	Powerpoint 2 gang 10A 240V a.c. black/matt silver	EA	$29.59	$2.96	10	120
XL777CR	Powerpoint 2 gang 10A 240V a.c. cream	EA	$23.07	$2.31	10	120
XL777BR	Powerpoint 2 gang 10A 240V a.c. brown	EA	$23.07	$2.31	10	120
XL777BE	Powerpoint 2 gang 10A 240V a.c. beige	EA	$23.07	$2.31	10	120
XL777GR	Powerpoint 2 gang 10A 240V a.c. green	EA	$28.53	$2.85	10	120
XL777MG	Powerpoint 2 gang 10A 240V a.c. misty grey	EA	$23.99	$2.40	10	120
XL777RED	Powerpoint 2 gang 10A 240V a.c. red	EA	$28.53	$2.85	10	120
XL777XWE	Powerpoint 2 gang 10A 240V a.c. with extra switch white	EA	$45.75	$4.58	10	120
XLP777XWEWE	Powerpoint 2 gang 10A 240V a.c. with extra switch gloss white	EA	$45.75	$4.58	10	120
XL777XBL	Powerpoint 2 gang 10A 240V a.c. with extra switch black	EA	$45.75	$4.58	10	120
XLP777XBLBL	Powerpoint 2 gang 10A 240V a.c. with extra switch gloss black	EA	$45.75	$4.58	10	120
XL777XCR	Powerpoint 2 gang 10A 240V a.c. with extra switch cream	EA	$45.75	$4.58	10	120
XLP777XCRCR	Powerpoint 2 gang 10A 240V a.c. with extra switch gloss cream	EA	$45.75	$4.58	10	120
XL777SWE	Powerpoint 2 gang 10A 240V a.c. with safety shutters white	EA	$51.22	$5.12	10	120
XLP777SWEWE	Powerpoint 2 gang 10A 240V a.c. with safety shutters gloss white	EA	$51.22	$5.12	10	120
XL777SWEMS	Powerpoint 2 gang 10A 240V a.c. with safety shutters white/matt silver	EA	$57.73	$5.77	10	120
XL777SBL	Powerpoint 2 gang 10A 240V a.c. with safety shutters black	EA	$51.22	$5.12	10	120
XLP777SBLBL	Powerpoint 2 gang 10A 240V a.c. with safety shutters gloss black	EA	$51.22	$5.12	10	120
XL777SCR	Powerpoint 2 gang 10A 240V a.c. with safety shutters cream	EA	$51.22	$5.12	10	120
XLP777ESWEWE	Powerpoint 2 gang 10A 240V a.c. with extra safety gloss white	EA	$26.41	$2.64	10	120
XLP777ESBLBL	Powerpoint 2 gang 10A 240V a.c. with extra safety gloss black	EA	$26.41	$2.64	10	120
XL777XSWE	Powerpoint 2 gang 10A 240V a.c. with extra switch & safety shutters white	EA	$92.69	$9.27	10	120
XLP777XSWEWE	Powerpoint 2 gang 10A 240V a.c. with extra switch & safety shutters gloss white	EA	$92.69	$9.27	10	120
XLP777XSBLBL	Powerpoint 2 gang 10A 240V a.c. with extra switch & safety shutters gloss black	EA	$92.69	$9.27	10	120
XL777XSCR	Powerpoint 2 gang 10A 240V a.c. with extra switch & safety shutters cream	EA	$92.69	$9.27	10	120
XL777NSWE	Powerpoint 2 gang 10A 240V a.c. with safety shutters & neons white	EA	$83.81	$8.38	10	120
XL777NSBL	Powerpoint 2 gang 10A 240V a.c. with safety shutters & neons black	EA	$82.31	$8.23	10	120
XL777XNSWE	Powerpoint 2 gang 10A 240V a.c. with extra switch, safety shutters & neons white	EA	$132.70	$13.27	10	120

N New product | ECO Energy Saving products | More info available. See technical pages | COMING SOON Coming soon | Product to be discontinued

Whilst most items are stock lines some products are made to order. UoM = Unit Of Measure.
Prices are effective 1 June 2017 and are subject to change without notice. Trade prices exclude GST.

Excel

Powerpoints

XL777/15WE

XL777/15BL

XL777EL10WE

Cat.Nos	Horizontal powerpoints	UoM	Trade price $	GST $	Box qty	Carton qty
	Double powerpoints					
XL777X3NSWE	Powerpoint 2 gang 10A 240V a.c. with extra switch, safety shutters & 3 neons white	EA	$162.01	$16.20	10	120
XLP777PWEWE	Powerpoint 2 gang double pole 10A 240V a.c. gloss white	EA	$58.46	$5.85	10	120
XL777/1015WE	Powerpoint 2 gang 10A & 15A 240V a.c. white	EA	$79.65	$7.96	10	120
XLP777/1015WEWE	Powerpoint 2 gang 10A & 15A 240V a.c. gloss white	EA	$79.65	$7.96	10	120
XL777/1015NSWE	Powerpoint 2 gang 10A & 15A 240V a.c. with safety shutters & neons white	EA	$123.97	$12.40	10	120
XL777RWE	Powerpoint 2 gang 10A 240V a.c. with round earth white	EA	$77.29	$7.73	10	120
XLP777RWEWE	Powerpoint 2 gang 10A 240V a.c. with round earth gloss white	EA	$77.29	$7.73	10	120
XL777RBL	Powerpoint 2 gang 10A 240V a.c. with round earth black	EA	$77.29	$7.73	10	120
XL777RCR	Powerpoint 2 gang 10A 240V a.c. with round earth cream	EA	$77.29	$7.73	10	120
XL777RSWE	Powerpoint 2 gang 10A 240V a.c. with safety shutters & round earth white	EA	$91.22	$9.12	10	120
XL777/15WE	Powerpoint 2 gang 15A 240V a.c. white	EA	$90.71	$9.07	10	120
XLP777/15WEWE	Powerpoint 2 gang 15A 240V a.c. gloss white	EA	$90.71	$9.07	10	120
XL777/15BL	Powerpoint 2 gang 15A 240V a.c. black	EA	$90.71	$9.07	10	120
XL777/15SWE	Powerpoint 2 gang 15A 240V a.c. with safety shutters white	EA	$120.49	$12.05	10	120
XLP777/15SWEWE	Powerpoint 2 gang 15A 240V a.c. with safety shutters gloss white	EA	$120.49	$12.05	10	120
XL777/15NSWE	Powerpoint 2 gang 15A 240V a.c. with safety shutters & neons white	EA	$128.83	$12.88	10	120
XLP777P15WEWE	Powerpoint 2 gang 15A 240V a.c. double pole with busbar gloss white	EA	$114.81	$11.48	10	120
XL777X35OWE	Powerpoint 2 gang 10A 240V a.c. with extra switch 35A "Oven" engraved white	EA	$64.92	$6.49	10	120
XLP777X35OWEWE	Powerpoint 2 gang 10A 240V a.c. with extra switch 35A "Oven" engraved gloss white	EA	$64.92	$6.49	10	120
	Double powerpoints RCD protected					
XL777EL10WE	Powerpoint 2 gang 10A 240V a.c. with RCD 10mA white	EA	$265.12	$26.51	2	-
XLP777EL10WE	Powerpoint 2 gang 10A 240V a.c. with RCD 10mA gloss white	EA	$265.12	$26.51	2	-
XL777EL10RED	Powerpoint 2 gang 10A 240V a.c. with RCD 10mA red	EA	$270.10	$27.01	2	-
XL777EL10NWE	Powerpoint 2 gang 10A 240V a.c. with RCD 10mA & "supply available" neon white	EA	$312.82	$31.28	2	-
XL777EL10NBE	Powerpoint 2 gang 10A 240V a.c. with RCD 10mA & "supply available" neon beige	EA	$312.82	$31.28	2	-
XL777EL10N2WE	Powerpoint 2 gang 10A 240V a.c. with RCD 10mA & neons white	EA	$331.51	$33.15	2	-
XL777EL10N3WE	Powerpoint 2 gang 10A 240V a.c. with RCD 10mA & 3 neons white	EA	$358.81	$35.88	2	-
XL777EL10N3RED	Powerpoint 2 gang 10A 240V a.c. with RCD 10mA & 3 neons red	EA	$365.77	$36.58	2	-
XL777EL30WE	Powerpoint 2 gang 10A 240V a.c. with RCD 30mA white	EA	$207.37	$20.74	2	-
XLP777EL30WEWE	Powerpoint 2 gang 10A 240V a.c. with RCD 30mA gloss white	EA	$207.37	$20.74	2	-
XL777EL30BL	Powerpoint 2 gang 10A 240V a.c. with RCD 30mA black	EA	$207.37	$20.74	2	-
XLP777EL30BLBL	Powerpoint 2 gang 10A 240V a.c. with RCD 30mA gloss black	EA	$207.37	$20.74	2	-
XL777EL30CR	Powerpoint 2 gang 10A 240V a.c. with RCD 30mA cream	EA	$207.37	$20.74	2	-

N New product | ECO Energy Saving products | More info available. See technical pages | COMING SOON Coming soon | Product to be discontinued

Whilst most items are stock lines some products are made to order. UoM = Unit Of Measure.
Prices are effective 1 June 2017 and are subject to change without notice. Trade prices exclude GST.

Excel

Powerpoints

XL777EL30NWE

XL777PA

XL798/777WE

XL798/777EL30

XL777IDWE

XL777USB2PSXWE

Cat.Nos	Horizontal powerpoints	UoM	Trade price $	GST $	Box qty	Carton qty
	Double powerpoints RCD protected					
XL777EL30NWE	Powerpoint 2 gang 10A 240V a.c. with RCD 30mA & "supply available" neon white	EA	$249.73	$24.97	2	100
XL777EL30N3WE	Powerpoint 2 gang 10A 240V a.c. with RCD 30mA & 3 neons white	EA	$323.36	$32.34	2	100
XL777EL30GWE	Powerpoint 2 gang 10A 240V a.c. with RCD 30mA for generators white	EA	$368.57	$36.86	2	100
XLP777EL30GWEWE	Powerpoint 2 gang 10A 240V a.c. with RCD 30mA for generators gloss white	EA	$368.57	$36.86	2	100
XL777EL30/1015W	Powerpoint 2 gang 10&15A 240V a.c. with RCD 30mA white	EA	$323.59	$32.36	2	100
XLP777EL30/1015	Powerpoint 2 gang 10&15A 240V a.c. with RCD 30mA gloss white	EA	$323.59	$32.36	2	100
XL777EL30G1015W	Powerpoint 2 gang 10&15A 240V a.c. with RCD 30mA for generators white	EA	$400.11	$40.01	2	100
	Skirting powerpoints					
XL792BWE	Powerpoint 2 gang 10A 240V a.c. with busbar link white	EA	$44.25	$4.42	2	100
XL792BBL	Powerpoint 2 gang 10A 240V a.c. with busbar link black	EA	$44.25	$4.42	2	100
XL792BCR	Powerpoint 2 gang 10A 240V a.c. with busbar link cream	EA	$44.25	$4.42	2	100
XL792NSWE	Powerpoint 2 gang 10A 240V a.c. with busbar link, safety shutters & neons white	EA	$69.65	$6.96	2	100
XL792B15WE	Powerpoint 2 gang 15A 240V a.c. with busbar link white	EA	$107.39	$10.74	2	100
	Double powerpoints with shaver outlet					
XL798/777WE	Powerpoint 2 gang 10A 240V a.c. with shaver outlet white	EA	$247.92	$24.79	-	-
XL798/777EL30WE	Powerpoint 2 gang 10A 240V a.c. with shaver outlet & RCD 30mA white	EA	$512.23	$51.22	-	-
	Double powerpoints with circuit ID					
XL777IDWE	Powerpoint 2 gang 10A 240V a.c. with circuit ID white	EA	$41.49	$4.15	10	120
XL777IDCLWE	Powerpoint 2 gang 10A 240V a.c. with clear circuit ID white	EA	$40.50	$4.05	10	120
XLP777IDCLWEWE	Powerpoint 2 gang 10A 240V a.c. with clear circuit ID gloss white	EA	$40.50	$4.05	10	120
	Double powerpoints with surge protection					
XL777PA	Powerpoint 2 gang 10A 240V a.c. with surge protector white	EA	$143.64	$14.36	2	-
XLP777PAWEWE	Powerpoint 2 gang 10A 240V a.c. with surge protector gloss white	EA	$143.64	$14.36	2	-
	Double powerpoints chemical resistant					
XL777CHWE	Powerpoint 2 gang 10A 240V a.c. chemical resistant white	EA	$32.25	$3.22	10	120
XL777XCHWE	Powerpoint 2 gang 10A 240V a.c. with extra switch chemical resistant white	EA	$56.40	$5.64	10	120
	Double powerpoints with dual USB charger for plasterboard and single brick installations					
XL777USB2PSAWE	Powerpoint 2 gang 10A 240V a.c. with USB charger 2x2.4A white	EA	$83.88	$8.39	-	12
	Double powerpoints with dual USB charger for wall box, fire box and double brick installations					
XL777USB2PSXWE	Powerpoint 2 gang 10A 240V a.c. with USB charger 2x2.4A & inline connector white	EA	$90.13	$9.01	-	12
	4 gang powerpoints					
XL7774WE	Powerpoint 4 gang 10A 240V a.c. white	EA	$66.71	$6.67	5	30
XLP7774WEWE	Powerpoint 4 gang 10A 240V a.c. gloss white	EA	$66.71	$6.67	5	30

N New product | ECO Energy Saving products | More info available. See technical pages | COMING SOON Coming soon | Product to be discontinued

Whilst most items are stock lines some products are made to order. UoM = Unit Of Measure.
Prices are effective 1 June 2017 and are subject to change without notice. Trade prices exclude GST.

Excel

Powerpoints

XLV787WE

XLV787XBL

XLV787/2XSWE

XL7775WE

XL7775/1WE

Cat.Nos	Horizontal powerpoints	UoM	Trade price $	GST $	Box qty	Carton qty
	4 gang powerpoints					
XL7774BL	Powerpoint 4 gang 10A 240V a.c. black	EA	$69.37	$6.94	5	30
XL7774CR	Powerpoint 4 gang 10A 240V a.c. cream	EA	$69.37	$6.94	5	30
XL7775/1WE	Powerpoint 4 gang 10A 240V a.c. with extra switch white	EA	$97.44	$9.74	-	-
XL7775/2WE	Powerpoint 4 gang 10A 240V a.c. with 2 extra switches white	EA	$104.67	$10.47	-	-
	5 gang powerpoints					
XL7775WE	Powerpoint 5 gang 10A 240V a.c. white	EA	$107.82	$10.78	-	-
	Vertical powerpoints					
	Single powerpoints					
XLV787WE	Powerpoint 1 gang 10A 240V a.c. white	EA	$24.49	$2.45	10	160
XLPV787WEWE	Powerpoint 1 gang 10A 240V a.c. gloss white	EA	$24.49	$2.45	10	160
XLV787BL	Powerpoint 1 gang 10A 240V a.c. black	EA	$24.49	$2.45	10	160
XLV787CR	Powerpoint 1 gang 10A 240V a.c. cream	EA	$24.49	$2.45	10	160
XLV787XWE	Powerpoint 1 gang 10A 240V a.c. with extra switch white	EA	$39.67	$3.97	10	160
XLV787XBL	Powerpoint 1 gang 10A 240V a.c. with extra switch black	EA	$39.67	$3.97	10	160
XLV787SWE	Powerpoint 1 gang 10A 240V a.c. with safety shutters white	EA	$26.38	$2.64	10	160
XLPV787SWEWE	Powerpoint 1 gang 10A 240V a.c. with safety shutters gloss white	EA	$26.38	$2.64	10	160
XLV787SBL	Powerpoint 1 gang 10A 240V a.c. with safety shutters black	EA	$26.38	$2.64	10	160
XLPV787SBLBL	Powerpoint 1 gang 10A 240V a.c. with safety shutters gloss black	EA	$26.38	$2.64	10	160
XLV787SCR	Powerpoint 1 gang 10A 240V a.c. with safety shutters cream	EA	$26.38	$2.64	10	160
XLV787XSWE	Powerpoint 1 gang 10A 240V a.c. with extra switch & safety shutters white	EA	$40.31	$4.03	10	160
XLPV787XSWEWE	Powerpoint 1 gang 10A 240V a.c. with extra switch & safety shutters gloss white	EA	$40.31	$4.03	10	160
XLV787/2XWE	Powerpoint 1 gang 10A 240V a.c. with 2 extra switches white	EA	$63.56	$6.36	10	160
XLPV787/2XWEWE	Powerpoint 1 gang 10A 240V a.c. with 2 extra switches gloss white	EA	$63.56	$6.36	10	160
XLV787/2XSWE	Powerpoint 1 gang 10A 240V a.c. with 2 extra switches & safety shutters white	EA	$72.36	$7.24	10	160
XLPV787/2XSWEWE	Powerpoint 1 gang 10A 240V a.c. with 2 extra switches & safety shutters gloss white	EA	$72.36	$7.24	10	160
XLPV787/2XSBLBL	Powerpoint 1 gang 10A 240V a.c. with 2 extra switches gloss black	EA	$72.36	$7.24	10	160
XLV787/15WE	Powerpoint 1 gang 15A 240V a.c. white	EA	$40.47	$4.05	10	160
XLPV787/15SWEWE	Powerpoint 1 gang 15A 240V a.c. with safety shutters gloss white	EA	$62.16	$6.22	10	160
XLPV787/15SBLBL	Powerpoint 1 gang 15A 240V a.c. with extra switch & safety shutters gloss black	EA	$62.16	$6.22	10	160
XLV787/15SWE	Powerpoint 1 gang 15A 240V a.c. with safety shutters white	EA	$62.16	$6.22	10	160

N New product | ECO Energy Saving products | More info available. See technical pages | COMING SOON Coming soon | Product to be discontinued

Whilst most items are stock lines some products are made to order. UoM = Unit Of Measure.
Prices are effective 1 June 2017 and are subject to change without notice. Trade prices exclude GST.

Excel

Powerpoints

XLV777WE

XLV777BL

XLV777XCR

XLV777SWE

XL798/0WE

Cat.Nos	Vertical powerpoints	UoM	Trade price $	GST $	Box qty	Carton qty
	Double powerpoints					
XLV777WE	Powerpoint 2 gang 10A 240V a.c. white	EA	$40.88	$4.09	10	120
XLPV777WEWE	Powerpoint 2 gang 10A 240V a.c. gloss white	EA	$40.88	$4.09	10	120
XLV777BL	Powerpoint 2 gang 10A 240V a.c. black	EA	$40.88	$4.09	10	120
XLV777CR	Powerpoint 2 gang 10A 240V a.c. cream	EA	$40.88	$4.09	10	120
XLPV777BEBE	Powerpoint 2 gang 10A 240V a.c. gloss beige	EA	$40.88	$4.09	10	120
XLV777XWE	Powerpoint 2 gang 10A 240V a.c. with extra switch white	EA	$66.56	$6.66	10	120
XLV777XBL	Powerpoint 2 gang 10A 240V a.c. with extra switch black	EA	$66.56	$6.66	10	120
XLV777XCR	Powerpoint 2 gang 10A 240V a.c. with extra switch cream	EA	$66.56	$6.66	10	120
XLV777SWE	Powerpoint 2 gang 10A 240V a.c. with safety shutters white	EA	$50.80	$5.08	10	120
XLPV777SWEWE	Powerpoint 2 gang 10A 240V a.c. with safety shutters gloss white	EA	$50.80	$5.08	10	120
XLV777SBL	Powerpoint 2 gang 10A 240V a.c. with safety shutters black	EA	$50.80	$5.08	10	120
XLPV777SBLBL	Powerpoint 2 gang 10A 240V a.c. with safety shutters gloss black	EA	$50.80	$5.08	10	120
XLV777SCR	Powerpoint 2 gang 10A 240V a.c. with safety shutters cream	EA	$50.80	$5.08	10	120
XLV777XSWE	Powerpoint 2 gang 10A 240V a.c. with extra switch & safety shutters white	EA	$83.27	$8.33	10	120
XLPV777XSWEWE	Powerpoint 2 gang 10A 240V a.c. with extra switch & safety shutters gloss white	EA	$83.27	$8.33	10	120
XLPV777XSBLBL	Powerpoint 2 gang 10A 240V a.c. with extra switch gloss black	EA	$83.27	$8.33	10	120
XLV777XSCR	Powerpoint 2 gang 10A 240V a.c. with extra switch & safety shutters cream	EA	$83.27	$8.33	10	120
	Shaver outlets					
XL798/0WE	Shaver outlet 117x73mm white	EA	$196.73	$19.67	-	-
XL798/0BL	Shaver outlet 117x73mm black	EA	$196.73	$19.67	-	-

N New product | ECO Energy Saving products | More info available. See technical pages | COMING SOON Coming soon | Product to be discontinued

Whilst most items are stock lines some products are made to order. UoM = Unit Of Measure.
Prices are effective 1 June 2017 and are subject to change without notice. Trade prices exclude GST.

Excel

Phone, TV, data and AV sockets

XL770/1RJ1WE

XL770/1CXWE

XL770/2RJ2WE

XL222/2TWE

Cat.Nos	Phone, TV, data and AV sockets	UoM	Trade price $	GST $	Box qty	Carton qty
	Phone outlets					
XL770/1RJ1WE	Phone outlet RJ12 1 gang Cat3 white	EA	$23.58	$2.36	10	160
XLP770/1RJ1WEWE	Phone outlet RJ12 1 gang Cat3 gloss white	EA	$23.58	$2.36	10	160
XL770/2RJ1WE	Phone outlet RJ12 2 gang Cat3 white	EA	$38.62	$3.86	10	160
XL770TOWE	Phone outlet Telecom 610 1 gang white	EA	$7.66	$0.77	10	160
XLP770TOWEWE	Phone outlet Telecom 610 1 gang gloss white	EA	$7.66	$0.77	10	160
XL770TOBL	Phone outlet Telecom 610 1 gang black	EA	$7.66	$0.77	10	160
XL770TOCR	Phone outlet Telecom 610 1 gang cream	EA	$7.66	$0.77	10	160
	TV outlets					
XL770FWE	TV outlet F-type 1 gang 3GHz white	EA	$7.90	$0.79	10	160
XLP770FWEWE	TV outlet F-type 1 gang 3GHz gloss white	EA	$7.90	$0.79	10	160
XL770/1CXWE	TV outlet coaxial 1 gang 75 Ohm white	EA	$10.56	$1.06	10	160
XLP770/1CXWEWE	TV outlet coaxial 1 gang 75 Ohm gloss white	EA	$10.56	$1.06	10	160
XL770/1FCXWE	TV outlet F to Pal 1 gang 75 Ohm white	EA	$11.61	$1.16	10	160
XLP770/1FCXWE	TV outlet F to Pal 1 gang 75 Ohm gloss white	EA	$11.61	$1.16	10	160
XLA770/1CXWE	TV outlet coaxial 1 gang 75 Ohm architrave white	EA	$11.72	$1.17	10	160
	RJ45 outlets					
XL770/1RJ2WE	Data outlet RJ45 1 gang Cat5e white	EA	$27.20	$2.72	10	160
XLP770/1RJ2WEWE	Data outlet RJ45 1 gang Cat5e gloss white	EA	$27.20	$2.72	10	160
XL770/2RJ2WE	Data outlet RJ45 2 gang Cat5e white	EA	$47.78	$4.78	10	160
	Combination outlets					
XL222/2TWE	Combo DGPO+ 2xRJ45 Cat5e + 2xF-type 2 plates tall white	EA	$69.28	$6.93	-	-
XL222PA/2TWE	Combo DGPO w surge + 2xRJ45 Cat5e + 2xF-type 2 plates tall white	EA	$187.97	$18.80	-	-
XL422PA/3TWE	Combo DGPO w surge + DGPO + 2xRJ45 Cat5e + 2xF-type 3 plates tall white	EA	$208.55	$20.86	-	-
XLV424/3WWE	Combo DGPO x 2 + RJ45x2 + 4x F-type 3 plates wide white	EA	$118.52	$11.85	-	-
	DVI outlets					
XLP950WEWE	DVI outlet 1 gang gloss white	EA	$81.22	$8.12	5	-
	HDMI outlets					
XLP906WEWE	HDMI outlet 1 gang gloss white	EA	$58.81	$5.88	5	-
	RCA & RGB outlets					
XLP902WEWE	RCA white/red 2 gang gloss white	EA	$42.01	$4.20	5	-
XLP903WEWE	RCA yellow/white/red 3 gang gloss white	EA	$50.41	$5.04	5	-
XLP904/2WEWE	RGB 2 gang gloss white	EA	$98.02	$9.80	5	-

N New product | ECO Energy Saving products | More info available. See technical pages | COMING SOON Coming soon | Product to be discontinued

Whilst most items are stock lines some products are made to order. UoM = Unit Of Measure.
Prices are effective 1 June 2017 and are subject to change without notice. Trade prices exclude GST.

Excel

Phone, TV, data and AV sockets & bulkhead lights

XLP904WEWE

XLP907WEWE

XLP900WEWE

XLP909WEWE

XLP930WEWE

Cat.Nos	Phone, TV, data and AV sockets	UoM	Trade price $	GST $	Box qty	Carton qty
	RCA & RGB outlets					
XLP904WEWE	RGB 1 gang gloss white	EA	$50.41	$5.04	5	-
XLP904R2WEWE	RGB & RCA white/red 2 gang gloss white	EA	$53.23	$5.32	5	-
XLP904R3WEWE	RGB & RCA yellow/white/red 2 gang gloss white	EA	$53.23	$5.32	5	-
XLP904SVWEWE	RGB & D-video 2 gang gloss white	EA	$50.41	$5.04	5	-
XLP904USBWEWE	RGB & USB 2 gang gloss white	EA	$53.23	$5.32	5	-
	Speaker outlets					
XLP907WEWE	Speaker outlet 1 gang gloss white	EA	$33.64	$3.36	5	-
XLP907/2WEWE	Speaker outlet 2 gang gloss white	EA	$42.01	$4.20	5	-
	Speakon outlets					
XLP910WEWE	Speakon outlet 1 gang gloss white	EA	$238.08	$23.81	5	-
	S-Video outlets					
XLP905WEWE	Mini Din S-video outlet 1 gang gloss white	EA	$36.41	$3.64	5	-
	USB 2.0 outlets for data transfer					
XLP943WEWE	USB outlet v2.0 1 gang gloss white	EA	$56.01	$5.60	5	-
XLP943/2WEWE	USB outlet v2.0 2 gang gloss white	EA	$67.22	$6.72	5	-
XLP900USBWEWE	VGA & USB outlet v2.0 2 gang gloss white	EA	$36.41	$3.64	5	-
	VGA outlets					
XLP900WEWE	VGA outlet HD15 1 gang gloss white	EA	$53.23	$5.32	5	-
	Wifi outlets					
XLP945WEWE	Wifi access point 1 gang gloss white	EA	$1,128.34	$112.83	5	-
	XLR outlets					
XLP909WEWE	XLR outlet 1 gang gloss white	EA	$246.49	$24.65	5	-
	Audio Jack outlets					
XLP911WEWE	Audio jack outlet 3.5mm 1 gang gloss white	EA	$42.01	$4.20	5	-
XLP900AUDWEWE	VGA & 3.5mm audio jack 2 gang gloss white	EA	$47.62	$4.76	5	-
	Bulkhead lights					
XLP930WEWE	Bulkhead light red 12/24V a.c. gloss white	EA	$56.01	$5.60	5	-
XLP931WEWE	Bulkhead light gloss white 12/24V a.c. gloss white	EA	$56.01	$5.60	5	-
XLP932WEWE	Bulkhead light green 12/24V a.c. gloss white	EA	$56.01	$5.60	5	-
XLP934WEWE	Bulkhead light red 230V a.c. gloss white	EA	$47.62	$4.76	5	-
XLP935WEWE	Bulkhead light white 230V a.c. gloss white	EA	$47.62	$4.76	5	-

N New product | ECO Energy Saving products | More info available. See technical pages | COMING SOON Coming soon | Product to be discontinued

Whilst most items are stock lines some products are made to order. UoM = Unit Of Measure.
Prices are effective 1 June 2017 and are subject to change without notice. Trade prices exclude GST.

Excel

Grid & plates

XL770/1GPLWE

XL770/2GPLBL

XL770/2GPLCR

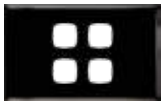
XLP770/4GPLBLBL

XL770/5GPLWE

XL770/6GPLWE

Cat.Nos	Grid & plates	UoM	Trade price $	GST $	Box qty	Carton qty
	For 770 series mechanisms - 1 to 6 gang					
XL770/1GPLWE	Grid & plate 1 gang white	EA	$6.54	$0.65	10	160
XLP770/1GPLWEWE	Grid & plate 1 gang gloss white	EA	$6.54	$0.65	10	160
XL770/1GPLBL	Grid & plate 1 gang black	EA	$6.54	$0.65	10	160
XLP770/1GPLBLBL	Grid & plate 1 gang gloss black	EA	$6.54	$0.65	10	160
XL770/1GPLCR	Grid & plate 1 gang cream	EA	$6.54	$0.65	10	160
XLP770/1GPLCRCR	Grid & plate 1 gang gloss cream	EA	$6.54	$0.65	10	160
XL770/2GPLWE	Grid & plate 2 gang white	EA	$7.09	$0.71	10	160
XLP770/2GPLWEWE	Grid & plate 2 gang gloss white	EA	$7.09	$0.71	10	160
XL770/2GPLBL	Grid & plate 2 gang black	EA	$7.09	$0.71	10	160
XLP770/2GPLBLBL	Grid & plate 2 gang gloss black	EA	$7.09	$0.71	10	160
XL770/2GPLCR	Grid & plate 2 gang cream	EA	$7.09	$0.71	10	160
XLP770/2GPLCRCR	Grid & plate 2 gang gloss cream	EA	$7.09	$0.71	10	160
XL770/3GPLWE	Grid & plate 3 gang white	EA	$7.76	$0.78	10	160
XLP770/3GPLWEWE	Grid & plate 3 gang gloss white	EA	$7.76	$0.78	10	160
XL770/3GPLBL	Grid & plate 3 gang black	EA	$7.76	$0.78	10	160
XLP770/3GPLBLBL	Grid & plate 3 gang gloss black	EA	$7.76	$0.78	10	160
XL770/3GPLCR	Grid & plate 3 gang cream	EA	$7.76	$0.78	10	160
XLP770/3GPLCRCR	Grid & plate 3 gang gloss cream	EA	$7.76	$0.78	10	160
XL770/4GPLWE	Grid & plate 4 gang white	EA	$12.56	$1.26	10	160
XLP770/4GPLWEWE	Grid & plate 4 gang gloss white	EA	$12.56	$1.26	10	160
XL770/4GPLBL	Grid & plate 4 gang black	EA	$12.56	$1.26	10	160
XLP770/4GPLBLBL	Grid & plate 4 gang gloss black	EA	$12.56	$1.26	10	160
XL770/4GPLCR	Grid & plate 4 gang cream	EA	$12.56	$1.26	10	160
XLP770/4GPLCRCR	Grid & plate 4 gang gloss cream	EA	$12.56	$1.26	10	160
XL770/5GPLWE	Grid & plate 5 gang white	EA	$13.96	$1.40	10	160
XLP770/5GPLWEWE	Grid & plate 5 gang gloss white	EA	$13.96	$1.40	10	160
XL770/5GPLBL	Grid & plate 5 gang black	EA	$13.96	$1.40	10	160
XLP770/5GPLBLBL	Grid & plate 5 gang gloss black	EA	$13.96	$1.40	10	160
XL770/5GPLCR	Grid & plate 5 gang cream	EA	$13.96	$1.40	10	160
XLP770/5GPLCRCR	Grid & plate 5 gang gloss cream	EA	$13.96	$1.40	10	160
XL770/6GPLWE	Grid & plate 6 gang white	EA	$13.96	$1.40	10	160
XLP770/6GPLWEWE	Grid & plate 6 gang gloss white	EA	$13.96	$1.40	10	160
XL770/6GPLBL	Grid & plate 6 gang black	EA	$13.96	$1.40	10	160

N New product | ECO Energy Saving products | More info available. See technical pages | COMING SOON Coming soon | Product to be discontinued

Whilst most items are stock lines some products are made to order. UoM = Unit Of Measure.
Prices are effective 1 June 2017 and are subject to change without notice. Trade prices exclude GST.

Excel

Grid & plates

XL770/0WE

XLA770/1GPLWE

XLA770/2GPLBL

XLA770/3GPLWE

XL770UWE

Cat.Nos	Grid & plates	UoM	Trade price $	GST $	Box qty	Carton qty
	For 770 series mechanisms - 6 gang, blank & narrow					
XLP770/6GPLBLBL	Grid & plate 6 gang gloss black	EA	$13.96	$1.40	10	160
XL770/6GPLCR	Grid & plate 6 gang cream	EA	$13.96	$1.40	10	160
XLP770/6GPLCRCR	Grid & plate 6 gang gloss cream	EA	$13.96	$1.40	10	160
XL770/0WE	Grid & plate blank white	EA	$6.90	$0.69	10	160
XLP770/0WEWE	Grid & plate blank gloss white	EA	$6.90	$0.69	10	160
XL770/0BL	Grid & plate blank black	EA	$6.90	$0.69	10	160
XLP770/0BLBL	Grid & plate blank gloss black	EA	$7.18	$0.72	10	160
XL770/0CR	Grid & plate blank cream	EA	$6.90	$0.69	10	160
XL792/02AWE	Grid & plate 2 gang narrow white	EA	$11.18	$1.12	10	160
XL792/02ABL	Grid & plate 2 gang narrow black	EA	$11.18	$1.12	10	160
XL792/4WE	Grid & plate 4 gang narrow white	EA	$9.62	$0.96	10	160
XL792/4BL	Grid & plate 4 gang narrow black	EA	$9.62	$0.96	10	160
XL792/0AWE	Grid & plate blank narrow white	EA	$11.18	$1.12	10	160
	Architrave grid & plates – 1 to 4 gang					
XLA770/1GPLWE	Architrave grid & plate 1 gang white	EA	$4.37	$0.44	20	-
XLA770/1GPLBL	Architrave grid & plate 1 gang black	EA	$4.37	$0.44	20	-
XLA770/1GPLCR	Architrave grid & plate 1 gang cream	EA	$4.37	$0.44	20	-
XLA770/2GPLWE	Architrave grid & plate 2 gang white	EA	$6.88	$0.69	20	-
XLA770/2GPLBL	Architrave grid & plate 2 gang black	EA	$6.88	$0.69	20	-
XLA770/2GPLCR	Architrave grid & plate 2 gang cream	EA	$6.88	$0.69	20	-
XLA770/3GPLWE	Architrave grid & plate 3 gang white	EA	$10.82	$1.08	20	-
XLA770/3GPLBL	Architrave grid & plate 3 gang black	EA	$10.82	$1.08	20	-
XLA770/4GPLWE	Architrave grid & plate 4 gang white	EA	$14.79	$1.48	20	-
XLA770/4GPLBL	Architrave grid & plate 4 gang black	EA	$14.92	$1.49	20	-
XLA770/4GPLCR	Architrave grid & plate 4 gang cream	EA	$14.79	$1.48	20	-
	Phone, TV, data and AV grid & plates					
XL770UWE	Electronics applications grid & plate universal plastic white	EA	$8.30	$0.83	10	160
XLP770UWEWE	Electronics applications grid & plate universal plastic gloss white	EA	$7.98	$0.80	10	160
XL770UBL	Electronics applications grid & plate universal plastic black	EA	$8.43	$0.84	10	160
XL770/1D1WE	Switch grid & plate 1 gang computer D1 white	EA	$12.58	$1.26	10	160
XL770/1D2WE	Switch grid & plate 1 gang computer D2 white	EA	$12.58	$1.26	10	160
XL770/2D1WE	Switch grid & plate 2 gang computer D1 white	EA	$12.58	$1.26	10	160

N New product | ECO Energy Saving products | More info available. See technical pages | COMING SOON Coming soon | Product to be discontinued

Whilst most items are stock lines some products are made to order. UoM = Unit Of Measure.
Prices are effective 1 June 2017 and are subject to change without notice. Trade prices exclude GST.

Excel

Coverplates

XL770/1PLWE

XL770/1PLMS

XL770/2PLBL

XL770/3PLCR

XL770/5PLWE

Cat.Nos	Switch coverplates – 1 to 5 gang	UoM	Trade price $	GST $	Box qty	Carton qty
XL770/1PLWE	Coverplate 1 gang white	EA	$3.26	$0.33	10	320
XLP770/1PLWE	Coverplate 1 gang gloss white	EA	$3.26	$0.33	10	320
XL770/1PLBL	Coverplate 1 gang black	EA	$3.44	$0.34	10	320
XLP770/1PLBL	Coverplate 1 gang gloss black	EA	$3.44	$0.34	10	320
XL770/1PLCR	Coverplate 1 gang cream	EA	$3.44	$0.34	10	320
XLP770/1PLCR	Coverplate 1 gang gloss cream	EA	$3.44	$0.34	10	320
XL770/1PLMS	Coverplate 1 gang matt silver	EA	$6.44	$0.64	10	320
XL770/2PLWE	Coverplate 2 gang white	EA	$3.26	$0.33	10	320
XLP770/2PLWE	Coverplate 2 gang gloss white	EA	$3.26	$0.33	10	320
XL770/2PLBL	Coverplate 2 gang black	EA	$3.44	$0.34	10	320
XLP770/2PLBL	Coverplate 2 gang gloss black	EA	$3.44	$0.34	10	320
XL770/2PLCR	Coverplate 2 gang cream	EA	$3.44	$0.34	10	320
XLP770/2PLCR	Coverplate 2 gang gloss cream	EA	$3.44	$0.34	10	320
XL770/2PLMS	Coverplate 2 gang matt silver	EA	$6.44	$0.64	10	320
XL770/3PLWE	Coverplate 3 gang white	EA	$3.26	$0.33	10	320
XLP770/3PLWE	Coverplate 3 gang gloss white	EA	$3.26	$0.33	10	320
XL770/3PLBL	Coverplate 3 gang black	EA	$3.44	$0.34	10	320
XLP770/3PLBL	Coverplate 3 gang gloss black	EA	$3.44	$0.34	10	320
XL770/3PLCR	Coverplate 3 gang cream	EA	$3.44	$0.34	10	320
XLP770/3PLCR	Coverplate 3 gang gloss cream	EA	$3.44	$0.34	10	320
XL770/3PLMS	Coverplate 3 gang matt silver	EA	$6.44	$0.64	10	320
XL770/4PLWE	Coverplate 4 gang white	EA	$3.26	$0.33	10	320
XLP770/4PLWE	Coverplate 4 gang gloss white	EA	$3.26	$0.33	10	320
XL770/4PLBL	Coverplate 4 gang black	EA	$3.44	$0.34	10	320
XLP770/4PLBL	Coverplate 4 gang gloss black	EA	$3.44	$0.34	10	320
XL770/4PLCR	Coverplate 4 gang cream	EA	$3.44	$0.34	10	320
XLP770/4PLCR	Coverplate 4 gang gloss cream	EA	$3.44	$0.34	10	320
XL770/4PLMS	Coverplate 4 gang matt silver	EA	$6.44	$0.64	10	320
XL770/5PLWE	Coverplate 5 gang white	EA	$3.26	$0.33	10	320
XLP770/5PLWE	Coverplate 5 gang gloss white	EA	$3.26	$0.33	10	320
XL770/5PLBL	Coverplate 5 gang black	EA	$3.44	$0.34	10	320
XLP770/5PLBL	Coverplate 5 gang gloss black	EA	$3.44	$0.34	10	320
XL770/5PLCR	Coverplate 5 gang cream	EA	$3.44	$0.34	10	320
XLP770/5PLCR	Coverplate 5 gang gloss cream	EA	$3.44	$0.34	10	320

N New product | ECO Energy Saving products | More info available. See technical pages | COMING SOON Coming soon | Product to be discontinued

Whilst most items are stock lines some products are made to order. UoM = Unit Of Measure.
Prices are effective 1 June 2017 and are subject to change without notice. Trade prices exclude GST.

Excel

Coverplates

XL770/6PLWE

XL1036PLMS

XLA770/1PLWE

XLA770/2PLBL

XLA770/3PLCR

XLA770/4PLBR

Cat.Nos	Switch coverplates – 6 gang, heavy duty and blank	UoM	Trade price $	GST $	Box qty	Carton qty
XL770/6PLWE	Coverplate 6 gang white	EA	$3.26	$0.33	10	120
XLP770/6PLWE	Coverplate 6 gang gloss white	EA	$3.26	$0.33	10	120
XL770/6PLBL	Coverplate 6 gang black	EA	$3.44	$0.34	10	120
XLP770/6PLBL	Coverplate 6 gang gloss black	EA	$3.44	$0.34	10	120
XL770/6PLCR	Coverplate 6 gang cream	EA	$3.44	$0.34	10	120
XLP770/6PLCR	Coverplate 6 gang gloss cream	EA	$3.44	$0.34	10	120
XL1036PLWE	Coverplate 1 gang heavy duty white	EA	$3.26	$0.33	10	120
XLP1036PLWE	Coverplate 1 gang heavy duty white	EA	$3.26	$0.33	10	120
XL1036PLMS	Coverplate 1 gang heavy duty matt silver	EA	$6.44	$0.64	10	120
XL770/0PLWE	Coverplate blank white	EA	$3.26	$0.33	10	120
XLP770/0PLWE	Coverplate blank gloss white	EA	$3.26	$0.33	10	120
XL770/0PLBL	Coverplate blank black	EA	$3.44	$0.34	10	120
XLP770/0PLBL	Coverplate blank gloss black	EA	$3.44	$0.34	10	120
XL770/0PLCR	Coverplate blank cream	EA	$3.44	$0.34	10	120
XLP770/0PLCR	Coverplate blank gloss cream	EA	$3.44	$0.34	10	120
XL770/0PLMS	Coverplate blank matt silver	EA	$6.44	$0.64	10	120
	Architrave coverplates – 1 to 4 gang					
XLA770/1PLWE	Architrave coverplate 1 gang white	EA	$3.06	$0.31	20	-
XLA770/1PLBL	Architrave coverplate 1 gang black	EA	$3.23	$0.32	20	-
XLA770/1PLCR	Architrave coverplate 1 gang cream	EA	$3.23	$0.32	20	-
XLA770/2PLWE	Architrave coverplate 2 gang white	EA	$3.44	$0.34	20	-
XLA770/2PLBL	Architrave coverplate 2 gang black	EA	$3.63	$0.36	20	-
XLA770/2PLCR	Architrave coverplate 2 gang cream	EA	$3.63	$0.36	20	-
XLA770/3PLWE	Architrave coverplate 3 gang white	EA	$3.54	$0.35	20	-
XLA770/3PLBL	Architrave coverplate 3 gang black	EA	$3.74	$0.37	20	-
XLA770/3PLCR	Architrave coverplate 3 gang cream	EA	$3.74	$0.37	20	-
XLA770/4PLWE	Architrave coverplate 4 gang white	EA	$3.54	$0.35	20	-
XLA770/4PLBR	Architrave coverplate 4 gang brown	EA	$3.74	$0.37	20	-
XLA770/4PLCR	Architrave coverplate 4 gang cream	EA	$3.74	$0.37	20	-

N New product | ECO Energy Saving products | More info available. See technical pages | COMING SOON Coming soon | Product to be discontinued

Whilst most items are stock lines some products are made to order. UoM = Unit Of Measure.
Prices are effective 1 June 2017 and are subject to change without notice. Trade prices exclude GST.

Excel

Coverplates

XL787PLWE

XL787PLMS

XL777PLWE

XL777PLPB

XL777XPLBL

Cat.Nos	Powerpoint coverplates	UoM	Trade price $	GST $	Box qty	Carton qty
	Single powerpoint coverplates					
XL787PLWE	Powerpoint coverplate 1 gang white	EA	$3.26	$0.33	20	320
XLP787PLWE	Powerpoint coverplate 1 gang gloss white	EA	$3.26	$0.33	20	320
XL787PLBL	Powerpoint coverplate 1 gang black	EA	$3.44	$0.34	20	320
XLP787PLBL	Powerpoint coverplate 1 gang gloss black	EA	$3.44	$0.34	20	320
XL787PLMS	Powerpoint coverplate 1 gang matt silver	EA	$6.44	$0.64	20	320
XL787PLCR	Powerpoint coverplate 1 gang cream	EA	$3.44	$0.34	20	320
XLP787PLCR	Powerpoint coverplate 1 gang gloss cream	EA	$3.44	$0.34	20	320
XL787XPLWE	Powerpoint coverplate 1 gang with extra hole white	EA	$3.26	$0.33	20	320
XLP787XPLWE	Powerpoint coverplate 1 gang with extra hole gloss white	EA	$3.26	$0.33	20	320
XLP787XPLBL	Powerpoint coverplate 1 gang with extra hole gloss black	EA	$3.44	$0.34	20	320
XL787XPLMS	Powerpoint coverplate 1 gang with extra hole matt silver	EA	$6.44	$0.64	20	320
XLP787XPLCR	Powerpoint coverplate 1 gang with extra hole gloss cream	EA	$3.44	$0.34	20	320
XL787/20PLWE	Powerpoint coverplate 1 gang for 20A switch white	EA	$3.26	$0.33	20	320
XLP787/20PLWE	Powerpoint coverplate 1 gang for 20A switch gloss white	EA	$3.26	$0.33	20	320
XL787/20PLMS	Powerpoint coverplate 1 gang for 20A switch matt silver	EA	$6.44	$0.64	20	320
XL787/2XPLMS	Powerpoint coverplate 1 gang with 2 extra holes matt silver	EA	$6.44	$0.64	20	320
	Double powerpoint coverplates					
XL777PLWE	Powerpoint coverplate 2 gang white	EA	$3.26	$0.33	20	320
XLP777PLWE	Powerpoint coverplate 2 gang gloss white	EA	$3.26	$0.33	20	320
XL777PLBL	Powerpoint coverplate 2 gang black	EA	$3.44	$0.34	20	320
XLP777PLBL	Powerpoint coverplate 2 gang gloss black	EA	$3.44	$0.34	20	320
XL777PLMS	Powerpoint coverplate 2 gang matt silver	EA	$6.44	$0.64	20	320
XL777PLSS	Powerpoint coverplate 2 gang stainless steel	EA	$21.91	$2.19	20	320
XL777PLPB	Powerpoint coverplate 2 gang polished brass	EA	$6.44	$0.64	20	320
XL777PLCR	Powerpoint coverplate 2 gang cream	EA	$3.44	$0.34	20	320
XLP777PLCR	Powerpoint coverplate 2 gang gloss cream	EA	$3.44	$0.34	20	320
XL777XPLWE	Powerpoint coverplate 2 gang with extra switch white	EA	$3.26	$0.33	20	320
XLP777XPLWE	Powerpoint coverplate 2 gang with extra switch gloss white	EA	$3.26	$0.33	20	320
XL777XPLBL	Powerpoint coverplate 2 gang with extra switch black	EA	$3.44	$0.34	20	320
XLP777XPLBL	Powerpoint coverplate 2 gang with extra switch gloss black	EA	$3.44	$0.34	20	320
XL777XPLMS	Powerpoint coverplate 2 gang with extra switch matt silver	EA	$6.44	$0.64	20	320
XL777XPLCR	Powerpoint coverplate 2 gang with extra switch cream	EA	$3.44	$0.34	20	320
XLP777XPLCR	Powerpoint coverplate 2 gang with extra switch gloss cream	EA	$3.44	$0.34	20	320

N New product | ECO Energy Saving products | More info available. See technical pages | COMING SOON Coming soon | Product to be discontinued

Whilst most items are stock lines some products are made to order. UoM = Unit Of Measure.
Prices are effective 1 June 2017 and are subject to change without notice. Trade prices exclude GST.

Excel

Coverplates and accessories

XLV777PLMS

XL7774PLWE

XLDC

XLTC

XLP770TOPLWE

XL1FB

Cat.Nos	Powerpoint coverplates	UoM	Trade price $	GST $	Box qty	Carton qty
	Vertical powerpoint coverplates					
XLPV777PLWE	Powerpoint coverplate vertical 2 gang gloss white	EA	$3.26	$0.33	10	120
XLV777PLMS	Powerpoint coverplate vertical 2 gang matt silver	EA	$6.44	$0.64	10	120
	4 gang powerpoint coverplate					
XL7774PLWE	Powerpoint coverplate 4 gang white	EA	$7.39	$0.74	5	-
	Double size coverplate					
XLDC	Powerpoint coverplate vertical 4 gang double size white	EA	$8.36	$0.84	-	-
	Triple size coverplate					
XLTC	Powerpoint coverplate vertical 6 gang triple size white	EA	$14.25	$1.42	-	-
	Phone coverplates					
XL770TOPLWE	Phone coverplate horizontal 1 gang white	EA	$3.26	$0.33	10	-
XLP770TOPLWE	Phone coverplate horizontal 1 gang gloss white	EA	$3.26	$0.33	10	-
	Paint blister					
XL1FB	Paint blister for Excel range	EA	$0.32	$0.03	-	-

N New product | ECO Energy Saving products | More info available. See technical pages | COMING SOON Coming soon | Product to be discontinued

Whilst most items are stock lines some products are made to order. UoM = Unit Of Measure.
Prices are effective 1 June 2017 and are subject to change without notice. Trade prices exclude GST.

Mechanisms

Switch mechanisms

770MWE

770/202MWE

770MHEATWE

770MLIGHTWE

Cat.Nos	Rocker switch mechanisms - Single Pole Single Throw (SPST)	UoM	Trade price $	GST $	Box qty	Carton qty
770MWE	Switch mech. 1 & 2 way 10A 240V a.c. white	EA	$8.52	$0.85	10	120
770MBL	Switch mech. 1 & 2 way 10A 240V a.c. black	EA	$8.55	$0.86	10	120
770MCR	Switch mech. 1 & 2 way 10A 240V a.c. cream	EA	$8.55	$0.86	10	120
770/15MWE	Switch mech. 1 & 2 way 15A 240V a.c. white	EA	$16.26	$1.63	10	120
770/15MBL	Switch mech. 1 & 2 way 15A 240V a.c. black	EA	$16.26	$1.63	10	120
770/15MCR	Switch mech. 1 & 2 way 15A 240V a.c. cream	EA	$16.26	$1.63	10	120
770/202MWE	Switch mech. 1 & 2 way 20A 240V a.c. white	EA	$22.81	$2.28	10	120
770/202MBL	Switch mech. 1 & 2 way 20A 240V a.c. black	EA	$22.81	$2.28	10	120
770/20MWE	Switch mech. 1 way 20A 240V a.c. white	EA	$21.98	$2.20	10	120
770/20MBL	Switch mech. 1 way 20A 240V a.c. black	EA	$21.98	$2.20	10	120
770/20MCR	Switch mech. 1 way 20A 240V a.c. cream	EA	$21.98	$2.20	10	120
770/35MWE	Switch mech. 1 way 35A 240V a.c. white	EA	$23.81	$2.38	10	120
770/35MBL	Switch mech. 1 way 35A 240V a.c. black	EA	$23.81	$2.38	10	120
770/35MCR	Switch mech. 1 way 35A 240V a.c. cream	EA	$23.81	$2.38	10	120
	Engraved rocker switch mechanisms - Single Pole Single Throw (SPST)					
770MFANWE	Switch mech. 10A 240V a.c. "Fan" engraved white	EA	$14.49	$1.45	10	120
770MHEATWE	Switch mech. 10A 240V a.c. "Heat" engraved white	EA	$14.49	$1.45	10	120
770MLIGHTWE	Switch mech. 10A 240V a.c. "Light" engraved white	EA	$14.49	$1.45	10	120
770MPRINTWE	Switch mech. 10A 240V a.c. "Print" engraved white	EA	$14.49	$1.45	10	120
770/35MENGWE	Switch mech. 1 way 35A 240V a.c. 1 word engraved white	EA	$30.57	$3.06	10	120
770/35MH/PLATEW	Switch mech. 1 & 2 way 35A 240V a.c. "Hot plate" engraved white	EA	$30.90	$3.09	10	120
770/35MHOBWE	Switch mech. 1 & 2 way 35A 240V a.c. "Hob" engraved white	EA	$30.90	$3.09	10	120
770/35MRANGEWE	Switch mech. 1 & 2 way 35A 240V a.c. "Range" engraved white	EA	$30.90	$3.09	10	120
770/35MOVENWE	Switch mech. 1 way 35A 240V a.c. "Oven" engraved white	EA	$30.90	$3.09	10	120
770/35MSTOVEWE	Switch mech. 1 way 35A 240V a.c. "Stove" engraved white	EA	$30.90	$3.09	10	120
	Duo rocker switch mechanisms - 2 x Single Pole Single Throw (SPST)					
770DMWE	Switch mech. duo 1 way 10A 240V a.c. white	EA	$21.34	$2.13	10	120
770DMBL	Switch mech. duo 1 way 10A 240V a.c. black	EA	$21.34	$2.13	10	120
770DMCR	Switch mech. duo 1 way 10A 240V a.c. cream	EA	$21.34	$2.13	10	120
770DMHEAT/HWE	Switch mech. duo 1 way 10A 240V a.c. "Heat" engraved x2 white	EA	$26.64	$2.66	10	120

N New product | ECO Energy Saving products | More info available. See technical pages | COMING SOON Coming soon | Product to be discontinued

Whilst most items are stock lines some products are made to order. UoM = Unit Of Measure.
Prices are effective 1 June 2017 and are subject to change without notice. Trade prices exclude GST.

Mechanisms

Switch mechanisms

770IMWE

769MWE

707MAM

770LLMWE

770RMWE

Cat.Nos	Intermediate rocker switch mechanisms - Double-Pole Crossover (DPXT)	UoM	Trade price $	GST $	Box qty	Carton qty
770IMWE	Switch mech. intermediate 10A 240V a.c. white	EA	$43.68	$4.37	10	120
770IMBL	Switch mech. intermediate 10A 240V a.c. black	EA	$43.68	$4.37	10	120
770IMCR	Switch mech. intermediate 10A 240V a.c. cream	EA	$43.68	$4.37	10	120
	Rocker switch mechanisms - Double-Pole Single Throw (DPST)					
769PMWE	Switch mech. double-pole 10A 240V a.c. white	EA	$26.09	$2.61	10	120
769PMBL	Switch mech. double-pole 10A 240V a.c. black	EA	$26.09	$2.61	10	120
769PMCR	Switch mech. double-pole 10A 240V a.c. cream	EA	$26.09	$2.61	10	120
768PMWE	Switch mech. double-pole 10A 240V a.c. red dot white	EA	$26.04	$2.60	10	120
769P15MWE	Switch mech. double-pole 15A 240V a.c. white	EA	$39.07	$3.91	10	120
769P15MBL	Switch mech. double-pole 15A 240V a.c. black	EA	$39.07	$3.91	10	120
769P20MWE	Switch mech. double-pole 20A 240V a.c. white	EA	$46.89	$4.69	10	120
769P20MBL	Switch mech. double-pole 20A 240V a.c. black	EA	$46.89	$4.69	10	120
	Rocker switch mechanisms - Double-Pole Double Throw (DPDT)					
769MWE	Switch mech. double pole 10A 240V a.c. white	EA	$53.37	$5.34	10	120
769MBL	Switch mech. double pole 10A 240V a.c. black	EA	$53.37	$5.34	10	120
769MCR	Switch mech. double pole 10A 240V a.c. cream	EA	$53.37	$5.34	10	120
	Indicators					
707MAM	Indicating light mechanism 240V a.c. amber	EA	$36.56	$3.66	10	120
707MRED	Indicating light mechanism 240V a.c. red	EA	$32.33	$3.23	10	120
707SM24VGR	Indicating light mechanism 24V a.c. green	EA	$37.81	$3.78	10	120
	Illuminated 1 & 2 way - Single Pole Double Throw (SPDT)					
770LLMWE	Switch mech. self illuminated 10A 240V a.c. white	EA	$33.08	$3.31	10	120
770LLMBL	Switch mech. self illuminated 10A 240V a.c. black	EA	$30.81	$3.08	10	120
770LLMCR	Switch mech. self illuminated 10A 240V a.c. cream	EA	$30.81	$3.08	10	120
770LL15MWE	Switch mech. self illuminated 15A 240V a.c. white	EA	$37.40	$3.74	10	120
770LL20MWE	Switch mech. self illuminated 20A 240V a.c. white	EA	$39.49	$3.95	10	120
	Rocker mechanisms with red dot - Single Pole Double Throw (SPDT)					
770RMWE	Switch mech. 10A 240V a.c. with red dot white	EA	$11.88	$1.19	10	120
770RMBL	Switch mech. 10A 240V a.c. with red dot black	EA	$11.88	$1.19	10	120
770RMCR	Switch mech. 10A 240V a.c. with red dot cream	EA	$11.88	$1.19	10	120

N New product | ECO Energy Saving products | More info available. See technical pages | COMING SOON Coming soon | Product to be discontinued

Whilst most items are stock lines some products are made to order. UoM = Unit Of Measure.
Prices are effective 1 June 2017 and are subject to change without notice. Trade prices exclude GST.

Mechanisms

Switch mechanisms

770XMWE

NX770MWE

NXC770MWE

883MBL

870IMWE

Cat.Nos	**Spring return rocker switch mechanisms - Single Pole Double Throw (SPDT) non-latching**	UoM	Trade price $	GST $	Box qty	Carton qty
770XMWE	Switch mech. spring return 15A 240V a.c. white	EA	$9.47	$0.95	10	120
770XMBL	Switch mech. spring return 15A 240V a.c. black	EA	$9.47	$0.95	10	120
	Push-button mechanisms					
	Mechanical - normally open - non-latching					
NX770MWE	Switch mech. 5A 240V a.c. white	EA	$9.04	$0.90	10	120
NX770MBL	Switch mech. 5A 240V a.c. black	EA	$9.48	$0.95	10	120
NL770/4MWE	Switch mech. with LED independently connected 5A 240V a.c. white	EA	$37.95	$3.80	10	120
NL770/4MRED	Switch mech. with LED independently connected 5A 240V a.c. red	EA	$37.95	$3.80	10	120
NL770MWE	Switch mech. with LED on when contact is open 5A 240V a.c. white	EA	$32.50	$3.25	10	120
	Mechanical - normally closed - non-latching					
NXC770MWE	Switch mech. NC, non-latching green body 5A 240V a.c. white	EA	$11.11	$1.11	10	120
NLC770/5MWE	Switch mech. with LED independently connected 5A 240V a.c. white	EA	$33.17	$3.32	10	120
	Mechanical - normally open - non-latching - extra low voltage					
NX770ELV24WE	Switch mech. push-button 24V d.c. white	EA	$36.48	$3.65	10	120
NL770ELV24WE	Switch mech. push-button 24V d.c. with red LED 10mA white	EA	$41.18	$4.12	10	120
	Mechanical - single & double pole changeover - non-latching					
NCH770MWE	Switch mech. single pole changeover 5A 240V a.c. white	EA	$13.75	$1.38	10	120
	Electronic - single pole					
883MWE	Push-button 3 wire 5A 240V a.c. with LED white	EA	$56.30	$5.63	10	120
883MBL	Push-button 3 wire 5A 240V a.c. with LED black	EA	$56.30	$5.63	10	120
883MCR	Push-button 3 wire 5A 240V a.c. with LED cream	EA	$56.30	$5.63	10	120
	Mechanical - single pole					
870MWE	Push-button 10A 240V a.c. white	EA	$10.24	$1.02	10	120
870MBL	Push-button 10A 240V a.c. black	EA	$10.24	$1.02	10	120
870MCR	Push-button 10A 240V a.c. cream	EA	$10.24	$1.02	10	120
	Mechanical intermediate - single pole					
870IMWE	Push-button intermediate 10A 240V a.c. white	EA	$52.41	$5.24	10	120
870IMBL	Push-button intermediate 10A 240V a.c. black	EA	$52.41	$5.24	10	120
870IMCR	Push-button intermediate 10A 240V a.c. cream	EA	$52.41	$5.24	10	120

N New product | ECO Energy Saving products | More info available. See technical pages | COMING SOON Coming soon | Product to be discontinued

Whilst most items are stock lines some products are made to order. UoM = Unit Of Measure.
Prices are effective 1 June 2017 and are subject to change without notice. Trade prices exclude GST.

Mechanisms

Switch mechanisms

770RS270MWE

250LMWE

400LMWE

KNOB1WE

Cat.Nos	Rotary switches	UoM	Trade price $	GST $	Box qty	Carton qty
770RS180MWE	Rotary switch mech. 3 positions 180° 15A 240V a.c. white	EA	$13.91	$1.39	10	120
770RS270MWE	Rotary switch mech. 4 positions 270° 15A 240V a.c. white	EA	$13.91	$1.39	10	120
770RS360MWE	Rotary switch mech. 4 positions 360° 15A 240V a.c. white	EA	$13.91	$1.39	10	120
	Keytag switches					
770/20KTM	Keytag mech. 1 way & loop 20A 240V a.c. white	EA	$22.58	$2.26	10	120
770/202KTM	Keytag mech. 1-2 way & loop 20A 240V a.c. white	EA	$21.77	$2.18	10	120
	Keylock switches - vertical					
770KLIMWE	Keylock switch 10A 240V a.c. removable ON position white	EA	$83.48	$8.35	10	-
770KLIOMWE	Keylock switch 10A 240V a.c. removable ON/OFF position white	EA	$76.80	$7.68	10	-
770KLOMWE	Keylock switch 10A 240V a.c. removable OFF position white	EA	$83.48	$8.35	10	-
	Rotary dimmers					
	Leading edge					
250LMWE	Rotary dimmer leading edge 2 wire 250VA 240V a.c. white	EA	$48.22	$4.82	20	400
250LMBL	Rotary dimmer leading edge 2 wire 250VA 240V a.c. black	EA	$48.22	$4.82	20	400
250LMCR	Rotary dimmer leading edge 2 wire 250VA 240V a.c. cream	EA	$48.22	$4.82	20	400
400LMWE	Rotary dimmer leading edge 2 wire 400VA 240V a.c. white	EA	$63.93	$6.39	20	400
400LMBL	Rotary dimmer leading edge 2 wire 400VA 240V a.c. black	EA	$63.93	$6.39	20	400
700LMWE	Rotary dimmer leading edge 2 wire 700VA 240V a.c. white	EA	$115.75	$11.58	20	400
1000LMWE	Rotary dimmer leading edge 2 wire 1000VA 240V a.c. white	EA	$194.07	$19.41	20	400
	Trailing edge					
250TMWE	Rotary dimmer trailing edge 2 wire 250VA 240V a.c. white	EA	$50.40	$5.04	20	400
250TMBL	Rotary dimmer trailing edge 2 wire 250VA 240V a.c. black	EA	$50.40	$5.04	20	400
250TMCR	Rotary dimmer trailing edge 2 wire 250VA 240V a.c. cream	EA	$50.40	$5.04	20	400
400TMWE	Rotary dimmer trailing edge 2 wire 400VA 240V a.c. white	EA	$76.77	$7.68	20	400
400TMBL	Rotary dimmer trailing edge 2 wire 400VA 240V a.c. black	EA	$76.77	$7.68	20	400
400TMCR	Rotary dimmer trailing edge 2 wire 400VA 240V a.c. cream	EA	$76.77	$7.68	20	400
700TMWE	Rotary dimmer trailing edge 2 wire 700VA 240V a.c. white	EA	$114.78	$11.48	20	400
1000TMWE	Rotary dimmer trailing edge 2 wire 1000VA 240V a.c. white	EA	$181.15	$18.12	20	400
	Dimmer & fan controller knobs					
KNOB1WE	Dimmer & fan knob rotary white	EA	$3.31	$0.33	10	-
KNOB1BL	Dimmer & fan knob rotary black	EA	$3.31	$0.33	10	-
KNOB1CR	Dimmer & fan knob rotary cream	EA	$3.31	$0.33	10	-

N New product | ECO Energy Saving products | More info available. See technical pages | COMING SOON Coming soon | Product to be discontinued

Whilst most items are stock lines some products are made to order. UoM = Unit Of Measure.
Prices are effective 1 June 2017 and are subject to change without notice. Trade prices exclude GST.

Mechanisms

Dimmer mechanisms & fan controllers

400A2PMWE

450SMWE

300FMWE

3SPKNOBWE

3SPKNOBCR

Cat.Nos	Push-button dimmers	UoM	Trade price $	GST $	Box qty	Carton qty
	Electronic - primary					
400A2PMWE	Push-button dimmer mech. 2 wire 400VA 240V a.c. white	EA	$78.77	$7.88	20	200
	Secondary					
450SMWE	Push-button secondary mech. universal 2 wire 450W 240V a.c. white	EA	$38.47	$3.85	20	400
	Fan controllers					
300FMWE	Fan controller rotary variable speed 300VA 240V a.c. white	EA	$59.77	$5.98	20	160
475/2M	Fan controller rotary 3 speed de-hummer 100VA 240V a.c. white	EA	$70.48	$7.05	10	-
	Fan knobs					
3SPKNOBWE	Knob for 475/2M series fans white	EA	$2.86	$0.29	10	100
3SPKNOBBL	Knob for 475/2M series fans black	EA	$2.86	$0.29	10	100
3SPKNOBCR	Knob for 475/2M series fans cream	EA	$2.86	$0.29	10	100

N New product | ECO Energy Saving products | More info available. See technical pages | COMING SOON Coming soon | Product to be discontinued

Whilst most items are stock lines some products are made to order. UoM = Unit Of Measure.
Prices are effective 1 June 2017 and are subject to change without notice. Trade prices exclude GST.

Mechanisms

Phone, TV, data and AV sockets

770USB2PSAMWE

770USB2PSXMWE

770CXMWE

SWFFC02

1310FSWE

Cat.Nos	USB charger mechanisms	UoM	Trade price $	GST $	Box qty	Carton qty
	For plasterboard or single brick installations - Dual type A					
770USB2PSAMWE	USB charger mech. 2 x 2.4A 250V a.c. white	EA	$54.08	$5.41	-	12
770USB2PSAMBL	USB charger mech. 2 x 2.4A 250V a.c. black	EA	$56.16	$5.62	-	12
	For wall box, fire box or double brick installations - Dual type A					
770USB2PSXMWE	USB charger mech. 2 x 2.4A 250V a.c. with inline connector white	EA	$60.33	$6.03	-	12
770USB2PSXMBL	USB charger mech. 2 x 2.4A 250V a.c. with inline connector black	EA	$62.42	$6.24	-	12
	For plasterboard or single brick installations - Dual type A&C					
770USB2ACMWE	USB charger mech. dual type A&C 2x2.4A white N	EA	$60.90	$6.09	-	12
	For plasterboard or single brick installations - Single type C					
770USB1CMWE	USB charger mech. single type C USB charger 45W white COMING SOON	EA	$70.90	$7.09	-	12

	TV mechanisms					
	TV sockets					
770L12CXWE	TV mech. loop circuit tap loss 12dB insertion loss 1.6db white	EA	$38.83	$3.88	10	-
770L16CXWE	TV mech. loop circuit tap loss 16dB insertion loss 1.3db white	EA	$38.83	$3.88	10	-
	Coax connectors					
770CXMWE	PAL to saddle white	EA	$6.81	$0.68	10	-
770CXMBL	PAL to saddle black	EA	$6.81	$0.68	10	-
770CXMCR	PAL to saddle cream	EA	$6.81	$0.68	10	-
D770CXFP	Coaxial female plug top 75 Ohm white	EA	$3.49	$0.35	10	400
D770CXP	Coaxial TV plug top 75 Ohm white	EA	$3.24	$0.32	10	160
	F connectors					
800FWE	F connector socket 75 Ohm 3.06Ghz white	EA	$4.99	$0.50	10	-
800FBL	F connector socket 75 Ohm 3.06Ghz black	EA	$4.99	$0.50	10	-
800FCR	F connector socket 75 Ohm 3.06Ghz cream	EA	$4.99	$0.50	10	-
SWFFC02	F connector socket 75 Ohm 3.06Ghz Foxtel approved F30725 white	EA	$6.58	$0.66	10	500
	Female to PAL connectors					
1310FSWE	F connector socket female to PAL white	EA	$6.86	$0.69	10	400
1310FSBL	F connector socket female to PAL black	EA	$6.86	$0.69	10	400
1310FSCR	F connector socket female to PAL cream	EA	$6.86	$0.69	10	400
1310F6	F connector for RG6 cable connection male fitting crimp type pack of 10 white	EA	$12.89	$1.29	10	2000
1310FL	F connector right-angled bracket with male & female end pack of 10 white	EA	$39.94	$3.99	10	100

N New product | ECO Energy Saving products | More info available. See technical pages | COMING SOON Coming soon | Product to be discontinued

Whilst most items are stock lines some products are made to order. UoM = Unit Of Measure.
Prices are effective 1 June 2017 and are subject to change without notice. Trade prices exclude GST.

Mechanisms

Phone, TV, data and AV sockets

1311S2

Cat.Nos	TV mechanisms	UoM	Trade price $	GST $	Box qty	Carton qty
	Passive filters					
1311S2	Passive filter for VHF, UHF & CATV signals 2 way 5-1000Mhz	EA	$29.87	$2.99	10	200
1311S4	Passive filter for VHF, UHF & CATV signals 4 way 5-1000Mhz	EA	$40.47	$4.05	10	200
1312S2	Passive filter for VHF, UHF & CATV signals 2 way 5-2050Mhz	EA	$37.70	$3.77	10	200
1312S4	Passive filter for VHF, UHF & CATV signals 4 way 5-2050Mhz	EA	$63.28	$6.33	10	200

Mechanisms

Phone, TV, data and AV sockets

RJ6P4C3/1

RJ6P4C3/2

RJ6P4C3/1

RJ8P8C6/1BL

Cat.Nos	Phone mechanisms	UoM	Trade price $	GST $	Box qty	Carton qty
RJ6P4C3/1	RJ45 socket Cat3 white	EA	$9.95	$1.00	20	240
RJ6P4C3/2	RJ45 socket Cat3 universal plates	EA	$9.95	$1.00	20	240
800RJU/HWE	Adaptor for tel & data Keystone style C white	EA	$1.93	$0.19	20	240
	Data mechanisms					
RJ8P8C5E/1	RJ45 socket Cat5E white	EA	$11.30	$1.13	20	240
RJ8P8C5E/2	RJ45 socket Cat5E universal plates	EA	$11.30	$1.13	20	240
RJ8P8C5E/1YE	RJ45 socket Cat5E yellow	EA	$12.98	$1.30	20	240
RJ8P8C6/1	RJ45 socket Cat6 white	EA	$13.66	$1.37	20	240
RJ8P8C6/2	RJ45 socket Cat6 universal plates	EA	$13.66	$1.37	20	240
RJ8P8C6/1BL	RJ45 socket Cat6 black	EA	$15.70	$1.57	20	240

Como for aged care buildings

Switches

CM910/1HLWE

CM910/1HWE

CM920/2HRDWE

CM920/3HNWE

CM910/1WE

CM920/2WE

Cat.Nos	Horizontal switches	UoM	Trade price $	GST $	Box qty	Carton qty
	Rocker switches - Single Pole Double Throw					
CM910/1HLWE	Switch large 1 gang 10A 240V a.c. white	EA	$17.60	$1.76	10	120
CM910/1HRDLWE	Switch large 1 gang 10A 240V a.c. with red line white	EA	$17.60	$1.76	10	120
CM910/1HLNWE	Switch large 1 gang 10A 240V a.c. with neon white	EA	$28.75	$2.88	10	120
CM910/1IMHLWE	Intermediate switch large 1 gang 10A 240V a.c. white	EA	$49.51	$4.95	10	120
CM910/1HWE	Switch 1 gang 10A 240V a.c. white	EA	$16.64	$1.66	10	120
CM910/1HNWE	Switch 1 gang 10A 240V a.c. with neon white	EA	$27.76	$2.78	10	120
CM910/1HRDWE	Switch 1 gang 10A 240V a.c. with red line white	EA	$16.64	$1.66	10	120
CM910/1IMHRDWE	Intermediate switch 1 gang 10A 240V a.c. with red line white	EA	$48.40	$4.84	10	120
CM910/1IMHWE	Intermediate switch 1 gang 10A 240V a.c. white	EA	$48.40	$4.84	10	120
CM910/15HNWE	Switch 1 gang 15A 240V a.c. with neon white	EA	$33.16	$3.32	10	120
CM910/35HWE	Isolator switch 1 gang 35A 240V a.c. white	EA	$31.21	$3.12	10	120
CM920/2HWE	Switch 2 gang 10A 240V a.c. white	EA	$24.66	$2.47	10	120
CM920/2HNWE	Switch 2 gang 10A 240V a.c. with neon white	EA	$47.75	$4.78	10	120
CM920/2HRDWE	Switch 2 gang 10A 240V a.c. with red line white	EA	$24.66	$2.47	10	120
CM920/3HWE	Switch 3 gang 10A 240V a.c. white	EA	$36.58	$3.66	10	120
CM920/3HNWE	Switch 3 gang 10A 240V a.c. with neon white	EA	$81.55	$8.16	10	120
CM920/3HRDWE	Switch 3 gang 10A 240V a.c. with red line white	EA	$36.58	$3.66	10	120
	Dimmers					
CM400LHWE	Rotary dimmer leading edge 2 wire 400VA 240V a.c. white (ECO)	EA	$77.52	$7.75	6	72
CM400THWE	Rotary dimmer trailing edge 2 wire 400VA 240V a.c. white (ECO)	EA	$87.56	$8.76	6	72
	Fan controller					
CM920/1FC3HWE	Fan controller 3 speed 100VA white	EA	$78.84	$7.88	6	72

	Vertical switches					
	Rocker switches - Single Pole Double Throw					
CM910/1WE	Switch 1 gang 10A 240V a.c. white	EA	$16.64	$1.66	10	120
CM910/1NWE	Switch 1 gang 10A 240V a.c. with neon white	EA	$27.76	$2.78	10	120
CM910/1RDWE	Switch 1 gang 10A 240V a.c. with red line white	EA	$16.64	$1.66	10	120
CM910/1IMWE	Intermediate switch 1 gang 10A 240V a.c. white	EA	$48.40	$4.84	10	120
CM910XWE	Push-button switch 1 gang 10A 240V a.c. white	EA	$19.05	$1.90	10	120
CM920/2WE	Switch 2 gang 10A 240V a.c. white	EA	$24.66	$2.47	10	120
CM920/2NWE	Switch 2 gang 10A 240V a.c. with neon white	EA	$46.91	$4.69	10	120
CM920/2RDWE	Switch 2 gang 10A 240V a.c. with red line white	EA	$24.66	$2.47	10	120

N New product | ECO Energy Saving products | More info available. See technical pages | COMING SOON Coming soon | Product to be discontinued

Whilst most items are stock lines some products are made to order. UoM = Unit Of Measure.
Prices are effective 1 June 2017 and are subject to change without notice. Trade prices exclude GST.

Como for aged care buildings

Switches

CM940/3WE

CM940/4NWE

CM940/6WE

CM400T/2WE

CM400TSW/2WE

CM910FC3WE

Cat.Nos	Vertical switches	UoM	Trade price $	GST $	Box qty	Carton qty
CM940/3WE	Switch 3 gang 10A 240V a.c. white	EA	$43.34	$4.33	4	48
CM940/3RDWE	Switch 3 gang 10A 240V a.c. with red line white	EA	$36.58	$3.66	4	48
CM940/4WE	Switch 4 gang 10A 240V a.c. white	EA	$48.35	$4.84	5	60
CM940/4NWE	Switch 4 gang 10A 240V a.c. with neon white	EA	$93.60	$9.36	5	60
CM940/4RDWE	Switch 4 gang 10A 240V a.c. with red line white	EA	$48.35	$4.84	5	60
CM940/6WE	Switch 6 gang 10A 240V a.c. white	EA	$71.04	$7.10	4	48
CM910/15WE	Switch 1 gang 15A 240V a.c. white	EA	$22.00	$2.20	10	120
CM910/15NWE	Switch 1 gang 15A 240V a.c. with neon white	EA	$33.16	$3.32	10	120
CM910/20DPRDWE	Switch 1 gang 20A 240V a.c. double-pole with red line white N	EA	$22.41	$2.24	10	120
CM910/35WE	Isolator switch 1 gang 35A 240V a.c. white	EA	$30.41	$3.04	10	120
CM910/35RDWE	Isolator switch 1 gang 35A 240V a.c. with red line white	EA	$30.41	$3.04	10	120
	Dimmers					
CM400TWE	Rotary dimmer trailing edge 2 wire 400VA 240V a.c. white ECO	EA	$87.32	$8.73	6	72
CM400T/2WE	Rotary dimmer trailing edge 2 wire 400VA 240V a.c. with 2x10A switches white ECO	EA	$173.06	$17.31	4	48
CM400TSW/2WE	Rotary dimmer trailing edge 2 wire 400VA 240V a.c. with 3x10A switches white ECO	EA	$116.49	$11.65	4	48
CM400TSW/2NWE	Rotary dimmer trailing edge 2 wire 400VA 240V a.c. with 3x10A switches & neon white ECO	EA	$155.19	$15.52	4	48
	Fan controllers					
CM910FC3WE	Fan controller 1 gang 3 speed 100VA white	EA	$65.80	$6.58	6	72
CM920/1FC3WE	Fan controller 2 gang with 10A switch 3 speed 100VA white	EA	$78.58	$7.86	6	72

N New product | ECO Energy Saving products | More info available. See technical pages | COMING SOON Coming soon | Product to be discontinued

Whilst most items are stock lines some products are made to order. UoM = Unit Of Measure.
Prices are effective 1 June 2017 and are subject to change without notice. Trade prices exclude GST.

Como for aged care buildings

Powerpoints

CM787WE

CM787NWE

CM787/15NWE

CM777AWE

CM777WE

CM777NWE

Cat.Nos	Horizontal powerpoints	UoM	Trade price $	GST $	Box qty	Carton qty
	Single powerpoints					
CM787WE	Powerpoint 1 gang 10A 240V a.c. with switch white	EA	$19.42	$1.94	6	72
CM787NWE	Powerpoint 1 gang 10A 240V a.c. with switch & neon white	EA	$23.95	$2.40	6	72
CM787/15WE	Powerpoint 1 gang 15A 240V a.c. white	EA	$42.25	$4.22	6	72
CM787/15NWE	Powerpoint 1 gang 15A 240V a.c. with neon white	EA	$53.38	$5.34	6	72
	Double powerpoints					
CM777AWE	Powerpoint 2 gang 10A 240V a.c. autoswitch with LED white	EA	$32.06	$3.21	10	120
	Vertical powerpoints					
	Double powerpoints					
CM777WE	Powerpoint 2 gang 10A 240V a.c. square plate white	EA	$33.42	$3.34	4	48
CM777NWE	Powerpoint 2 gang 10A 240V a.c. with neon square plate white	EA	$46.83	$4.68	4	48

Como for aged care buildings

Phone, TV, data and AV sockets

CM910/1FFWE

CM920/2FFWE

CM920/2RJ45HWE

CM920/2RJ45FHWE

CM920/2RJ45PHWE

CM940/4RJFFPWE

Cat.Nos	Horizontal	UoM	Trade price $	GST $	Box qty	Carton qty
	TV sockets					
CM910/1FFWE	A/V socket 1 gang F type white	EA	$13.69	$1.37	10	120
CM910/1PWE	A/V socket 1 gang Pal to F type white	EA	$14.98	$1.50	10	120
CM920/2FFWE	A/V socket 2 gang F type white	EA	$23.95	$2.40	10	120
	RJ45 sockets					
CM910/1RJ45HWE	A/V socket 1 gang RJ45 Cat6 white	EA	$21.49	$2.15	10	120
CM920/2RJ45HWE	A/V socket 2 gang RJ45 Cat6 white	EA	$39.44	$3.94	10	120
	Combined outlets					
CM920/2RJ45FHWE	A/V socket 2 gang RJ45 & F type white	EA	$31.60	$3.16	10	120
CM920/2RJ45PHWE	A/V socket 2 gang Pal to F type & RJ45 Cat6 white	EA	$32.92	$3.29	10	120
	Vertical					
	Combined outlets					
CM940/4RJFFPWE	A/V socket 4 gang Pal & F type & blank & RJ45 Cat6 white	EA	$50.51	$5.05	4	48

N New product | ECO Energy Saving products | More info available. See technical pages | COMING SOON Coming soon | Product to be discontinued

Whilst most items are stock lines some products are made to order. UoM = Unit Of Measure.
Prices are effective 1 June 2017 and are subject to change without notice. Trade prices exclude GST.

Como for aged care buildings

Mechanisms

CMM910WE

CMM910RNWE

CMM910LNWE

CMM920/3WE

CMM787RWE

CMM400TWE

Cat.Nos	**Switch mechanisms**	UoM	Trade price $	GST $	Box qty	Carton qty
CMM910WE	Switch mech. 10A 240V a.c. white	EA	$8.40	$0.84	10	120
CMM910RWE	Switch mech. 10A 240V a.c. right side white	EA	$8.40	$0.84	10	120
CMM910LWE	Switch mech. 10A 240V a.c. left side white	EA	$8.40	$0.84	10	120
CMM910NWE	Switch mech. 10A 240V a.c. with neon white	EA	$20.93	$2.09	10	120
CMM910RNWE	Switch mech. 10A 240V a.c. with neon right side white	EA	$20.93	$2.09	10	120
CMM910LNWE	Switch mech. 10A 240V a.c. with neon left side white	EA	$20.93	$2.09	10	120
CMM910RDWE	Switch mech. 10A 240V a.c. with red line white	EA	$8.40	$0.84	10	120
CMM910RRDWE	Switch mech. 10A 240V a.c. with red line right side white	EA	$8.40	$0.84	10	120
CMM910LRDWE	Switch mech. 10A 240V a.c. with red line left side white	EA	$8.40	$0.84	10	120
CMM910VWE	Switch mech. 10A 240V a.c. vertical white	EA	$9.12	$0.91	10	120
CMM910VNWE	Switch mech. 10A 240V a.c. with neon vertical white	EA	$14.16	$1.42	10	120
CMM910IMWE	Intermediate switch mech. 10A 240V a.c. white	EA	$42.71	$4.27	10	120
CMM910XWE	Switch mech. 10A 240V a.c. spring return white	EA	$8.40	$0.84	10	120
CMM920/3NWE	Switch mech. 3 gang 10A 240V a.c. with neon white	EA	$39.78	$3.98	10	120
CMM920/3WE	Switch mech. 3 gang 10A 240V a.c. white	EA	$20.99	$2.10	10	120
CMM910/15WE	Switch mech. 15A 240V a.c. white	EA	$15.35	$1.54	10	120
CMM910/35WE	Isolator switch mech. 35A 240V a.c. white	EA	$21.94	$2.19	10	120
	Powerpoints					
	Single powerpoints					
CMM787RWE	Powerpoint mech. single 10A 240V a.c. autoswitch right side white	EA	$15.39	$1.54	10	120
CMM787LWE	Powerpoint mech. single 10A 240V a.c. autoswitch left side white	EA	$15.39	$1.54	10	120
	Dimmer mechanisms					
	Trailing edge					
CMM400TWE	Rotary dimmer trailing edge 2 wire 400VA 240V a.c. white ECO	EA	$74.00	$7.40	10	120
	Dimmer knobs					
CMKNOBWE	Dimmer knob white	EA	$3.13	$0.31	10	120

N New product | ECO Energy Saving products | More info available. See technical pages | COMING SOON Coming soon | Product to be discontinued

Whilst most items are stock lines some products are made to order. UoM = Unit Of Measure.
Prices are effective 1 June 2017 and are subject to change without notice. Trade prices exclude GST.

Como for aged care buildings

Mechanisms

CMM910FFWE

CMM910PWE

CMM920PRWE

CMMRJ45C6WE

CM910MBLANKWE

CMM920/770AWE

Cat.Nos	Phone, TV, data and AV sockets	UoM	Trade price $	GST $	Box qty	Carton qty
	TV mechanisms					
CMM910FFWE	TV mech. 1 gang F type 3GHz white	EA	$5.51	$0.55	10	120
CMM920FFLWE	TV mech. 2 gang F type 3GHz left side white	EA	$5.51	$0.55	10	120
CMM920FFRWE	TV mech. 2 gang F type 3GHz right side white	EA	$5.51	$0.55	10	120
CMM910PWE	TV mech. 1 gang PAL to F type white	EA	$6.67	$0.67	10	120
CMM920PLWE	TV mech. 2 gang PAL to F type left side white	EA	$6.67	$0.67	10	120
CMM920PRWE	TV mech. 2 gang PAL to F type right side white	EA	$6.67	$0.67	10	120
	RJ45 sockets					
CMMRJ45C6WE	RJ45 mech. Cat6 UTP white	EA	$14.68	$1.47	10	120
CMMRJ45C6LWE	RJ45 mech. Cat6 UTP left side white	EA	$14.68	$1.47	10	120
CMMRJ45C6RWE	RJ45 mech. Cat6 UTP right side white	EA	$14.68	$1.47	10	120
	Blank inserts & adaptors					
CM910MBLANKWE	Blank insert white	EA	$5.18	$0.52	20	240
CMM910/770AWE	Adaptor for 770 mechs 1 gang white	EA	$3.68	$0.37	20	240
CMM920/770AWE	Adaptor for 770 mechs 2 gang white	EA	$3.68	$0.37	20	240
	Electronic devices*					
	Automatic switches					
572052	Auto. switch 2 wire 400W 240V a.c. td 1s-16mn 3-1000 lux 2 module white (ECO, ✕)	EA	$133.92	$13.39	10	100
574062	Auto. switch 2 wire 400W 250V a.c. 2 module magnesium (ECO, ✕)	EA	$153.98	$15.40	-	20
572053	Auto. switch 3 wire 1000W 240V a.c. td 1s-16mn 3-1000 lux 2 module white (ECO)	EA	$116.47	$11.65	10	100
574061	Auto. switch 3 wire 400W 250V a.c. 2 module magnesium (ECO)	EA	$133.92	$13.39	-	20
572051	No touch switch 1000W 100/240V a.c. 2 module white (ECO)	EA	$190.66	$19.07	10	100
572223	Overdoor lighting unit with white diffuser 2 module white (ECO)	EA	$64.34	$6.43	10	100
	Skirting lights					
572221	Skirting light 0.2/1W 230V a.c. 2 module white	EA	$64.89	$6.49	-	20
574082	Skirting light 0.2/1W 230V a.c. 2 module magnesium	EA	$74.66	$7.47	-	20
572226	Skirting light with IR sensor & alarm 1W 100-230V a.c. 2 module white	EA	$127.18	$12.72	-	20
572726	Skirting light with IR sensor & alarm 1W 100-230V a.c. 2 module magnesium	EA	$146.25	$14.62	-	20
	Time-delay switch					
572055	Time-delay 2 wire 1000W 240V a.c. 2 module white	EA	$181.52	$18.15	10	100

*Arteor electronic devices are to be used with Como CMAR2SF installation grids and CM910PLWE coverplates (P. 218).

N New product | ECO Energy Saving products | More info available. See technical pages | COMING SOON Coming soon | ✕ Product to be discontinued

Whilst most items are stock lines some products are made to order. UoM = Unit Of Measure.
Prices are effective 1 June 2017 and are subject to change without notice. Trade prices exclude GST.

Como for aged care buildings

Mechanisms and coverplates

078524

572222

CM910PLWE

CM920PLWE

CM920V1PLWE

CM920V2PLWE

Cat.Nos	Electronic devices*	UoM	Trade price $	GST $	Box qty	Carton qty
	Illuminated signs					
078521	LED sign blue 1W 240V a.c. accepts custom labels 2 module white frame	EA	$61.28	$6.13	10	100
078524	LED sign red or green 1W 240V a.c. accepts custom labels 2 module white frame	EA	$61.28	$6.13	10	100
572452	Illuminated light 1W 230V a.c. supplied with 4 coloured labels 1 module white	EA	$22.81	$2.28	10	100
572453	Overdoor lighting unit with red diffuser 2 module white	EA	$64.34	$6.43	10	100
	Lighting unit					
572222	Miniature safety lighting unit illuminates upon power failure 2 module white	EA	$195.37	$19.54	10	100
	Emergency stop button					
572363	Mushroom emergency push-button NO+NC 10A 240V a.c. 2 module yellow/red	EA	$33.89	$3.39	10	100
	Buzzers					
572204	Buzzer 230V a.c. 1 module white	EA	$42.92	$4.29	10	100
572207	Buzzer 230V a.c. 2 module white	EA	$110.06	$11.01	10	100
	Coverplates					
	Horizontal					
CM910PLWE	Coverplate horizontal 1 gang or for electronic mechs. 2 modules white	EA	$4.23	$0.42	10	120
CM920PLWE	Coverplate horizontal 2 gang white	EA	$4.23	$0.42	10	120
CMAR3MPLWE	Coverplate horizontal for electronic mechs. 3 modules white	EA	$4.23	$0.42	10	120
CM920PLBLANKWE	Coverplate horizontal blank white	EA	$9.39	$0.94	10	120
	Vertical					
CM920V1PLWE	Coverplate vertical 2 gang white	EA	$4.23	$0.42	10	120
CM920V2PLWE	Coverplate vertical 2 gang or switch and dimmer/fan controller white	EA	$4.23	$0.42	10	120
CM940PLWE	Coverplate vertical 4 gang white	EA	$7.72	$0.77	10	120

*Arteor electronic devices are to be used with Como CMAR2SF installation grids and CM910PLWE coverplates (P. 218).

Como for aged care buildings

Installation accessories

CMAR2MSF

CM435/2

CM940WALLBOX

712

CM910SHROUD

143/2

Cat.Nos	Support frames	UoM	Trade price $	GST $	Box qty	Carton qty
CM910SF	Support frame 1 gang white	EA	$7.06	$0.71	10	120
CM920SF	Support frame 2 gang white	EA	$7.06	$0.71	10	120
CM940SF	Support frame 4 gang white	EA	$12.12	$1.21	10	120
CMAR2MSF*	Support frame for electronic mechs. 2 modules white	EA	$2.02	$0.20	10	120
CMAR3MSF*	Support frame for electronic mechs. 3 modules white	EA	$2.02	$0.20	10	120
	Wall boxes					
435	Wall box 99x57x48mm metal black	EA	$41.06	$4.11	-	60
CM435/2	Fire box to suit Como 4 gang metal	EA	$44.88	$4.49	4	48
CM940WALLBOX	Wall box for Como 4 gang plastic	EA	$5.46	$0.55	4	48
429R	Wall box with sliding nuts, retent. clips & cover 97x60x45mm black	EA	$14.57	$1.46	10	140
	Render mounting brackets					
954	Render bracket for standard grids 84mm m. centres metal	EA	$5.23	$0.52	12	144
CM940RENDERBR	Render bracket for Como 4 gang metal	EA	$5.28	$0.53	12	144
	Mounting clips					
712	Mounting clips 10mm plasterboard for 84mm m. centres 50x76mm max cutout	EA	$1.84	$0.18	50	600
CM940CCLIP	Mounting clips for Como 4 gang metal	EA	$5.22	$0.52	8	96
	Protective shroud					
CM910SHROUD	Shroud for support frame CM910SF white	EA	$3.13	$0.31	16	192
CM920SHROUD	Shroud for support frame CM920SF white	EA	$6.25	$0.62	8	96
CM940SHROUD	Shroud for support frame CM940SF white	EA	$8.35	$0.84	4	48
	Stud brackets					
143	Mounting bracket standard size metal	EA	$2.23	$0.22	20	200
143/2	Mounting bracket horizontal stud mount with nails metal	EA	$2.38	$0.24	20	120
143/2V	Mounting bracket vertical stud mount with nails metal	EA	$2.38	$0.24	20	120
CM940STUDBR	Bracket stud mount for 4 gang Como metal	EA	$5.28	$0.53	4	48

*CMAR2MSF/3MSF allows the installation of Arteor electronic devices (p.216 to 217), use specific Como coverplates (CM910PLWE and/or CMAR3MPLWE) on page 217.

Standard

Switches

770/1WE

1A770WE

65WE

600WE

770REL8

TD170/1WE

Cat.Nos	Vertical switches	UoM	Trade price $	GST $	Box qty	Carton qty
	Rocker switches - Single Pole Double Throw (SPDT)					
770/1WE	Switch 1 gang 10A 240V a.c. white	EA	$14.34	$1.43	10	200
770/2WE	Switch 2 gang 10A 240V a.c. white	EA	$23.15	$2.32	10	200
770/3WE	Switch 3 gang 10A 240V a.c. white	EA	$38.08	$3.81	10	200
770/4WE	Switch 4 gang 10A 240V a.c. white	EA	$55.40	$5.54	10	200
	Heavy duty rocker switches					
F1036/3WE	Isolator switch 1 gang 36A 240V a.c. white	EA	$49.98	$5.00	10	200
F1036PWE	Isolator switch 1 gang double-pole 36A 240V a.c. white	EA	$95.45	$9.54	10	200
	Deep plates switches					
1A770WE	Switch 1 gang 10A 240V a.c. deep plate white	EA	$23.18	$2.32	10	-
1A770PWE	Switch 1 gang double-pole 10A 240V a.c. deep plate white	EA	$39.21	$3.92	10	-
2/770WE	Switch 2 gang 10A 240V a.c. deep plate white	EA	$42.79	$4.28	5	-
2/770PWE	Switch 2 gang double-pole 10A 240V a.c. deep plate white	EA	$73.53	$7.35	5	-
2/770PBE	Switch 2 gang double-pole 10A 240V a.c. deep plate beige	EA	$73.53	$7.35	5	-
	Older style round switches					
65WE	Switch 1 gang 2 way 10A 240V a.c. old style round surface mount white	EA	$33.58	$3.36	10	-
	Cord-pull ceiling switches					
600WE	Ceiling switch cord-pull 1 gang 10A 240V a.c. rectangle white	EA	$54.62	$5.46	10	160
600NWE	Ceiling switch cord-pull 1 gang 10A 240V a.c. rectangle white with LED	EA	$114.33	$11.43	10	160
601WE	Ceiling switch cord-pull 1 gang 10A 240V a.c. round white	EA	$43.31	$4.33	10	160
600XWE	Ceiling switch cord-pull 1 gang 15A 240V a.c. rectangle white	EA	$57.26	$5.73	10	160
601XWE	Ceiling switch cord-pull 1 gang 15A 240V a.c. round white	EA	$55.67	$5.57	10	160
	Relay switches					
770REL1	Booster relay switch 1 gang 4800W 240V a.c. with 2 neons "Boost" & "Tap OK" white	EA	$227.68	$22.77	3	108
770REL8	Relay switch pack 1 gang 2400W 240V a.c. NO contacts white	EA	$78.69	$7.87	3	-
	Time-delay switches					
TD170/1WE	Time-delay switch 1 gang 1/3/10mn 2 wire 2.5A 240V a.c. white	EA	$99.84	$9.98	3	-
TX770/1RCWE	Time-delay switch push start / restart 1 gang 1s-239hr 3 wire 10A 240V a.c. white	EA	$157.70	$15.77	3	-
TX770/2RCWE	Time-delay switch push start / stop 1 gang 1s-239hr 3 wire 10A 240V a.c. white	EA	$157.70	$15.77	3	-
TF770/1RCWE	Fan time-delay 1 gang 3/10/20mn 2 wire 10A 240V a.c. white	EA	$111.42	$11.14	3	-

N New product | ECO Energy Saving products | More info available. See technical pages | COMING SOON Coming soon | Product to be discontinued

Whilst most items are stock lines some products are made to order. UoM = Unit Of Measure.
Prices are effective 1 June 2017 and are subject to change without notice. Trade prices exclude GST.

Standard

Switches

250LWE

300FWE

475/2

A770/1WE

Cat.Nos	Vertical dimmers and Fan controllers	UoM	Trade price $	GST $	Box qty	Carton qty
	Rotary dimmers					
250LWE	Rotary dimmer leading edge 2 wire 250VA 240V a.c. white	EA	$53.47	$5.35	3	108
400LWE	Rotary dimmer leading edge 2 wire 400VA 240V a.c. white	EA	$76.99	$7.70	3	108
700LWE	Rotary dimmer leading edge 2 wire 700VA 240V a.c. white	EA	$134.86	$13.49	3	108
1000LWE	Rotary dimmer leading edge 2 wire 1000VA 240V a.c. white	EA	$217.05	$21.70	3	108
250TWE	Rotary dimmer trailing edge 2 wire 250VA 240V a.c. white	EA	$56.25	$5.62	3	108
400TWE	Rotary dimmer trailing edge 2 wire 400VA 240V a.c. white	EA	$90.63	$9.06	3	108
700TWE	Rotary dimmer trailing edge 2 wire 700VA 240V a.c. white	EA	$133.80	$13.38	3	108
1000TWE	Rotary dimmer trailing edge 2 wire 1000VA 240V a.c. white	EA	$203.58	$20.36	3	108
2000EWE	Rotary dimmer trailing edge 2 wire 2000VA 240V a.c. white	EA	$476.04	$47.60	3	108
2400EWE	Rotary dimmer trailing edge 2 wire 2400VA 240V a.c. white	EA	$526.73	$52.67	3	108
	Fan controllers					
300FWE	Fan controller 300VA white	EA	$66.54	$6.65	3	-
650ETWE	Fan controller 3 speed 650VA auto OFF after 2hrs white	EA	$159.32	$15.93	3	-
650ET1WE	Fan controller 3 speed 650VA auto OFF after 2hrs & reduced max speed white	EA	$159.79	$15.98	3	-
475/2	Fan controller 3 speed 100VA 1.5µF+2.5µF capacitors white	EA	$80.14	$8.01	3	-
	Architrave switches					
A770/1WE	Architrave switch 1 gang 2 way 10A 240V a.c. white	EA	$11.60	$1.16	10	-
A770/2WE	Architrave switch 2 gang 2 way 10A 240V a.c. white	EA	$28.46	$2.85	10	-

N New product | ECO Energy Saving products | More info available. See technical pages | COMING SOON Coming soon | Product to be discontinued

Whilst most items are stock lines some products are made to order. UoM = Unit Of Measure.
Prices are effective 1 June 2017 and are subject to change without notice. Trade prices exclude GST.

Standard

Switches

770/1KLIOWE

770KT1

770T3

Cat.Nos	Hospitality	UoM	Trade price $	GST $	Box qty	Carton qty
	Keylock switches - vertical					
770/1KLIOWE	Keylock switch 10A 240V a.c. removable ON/OFF position white	EA	$121.45	$12.14	10	-
770/1KLIWE	Keylock switch 10A 240V a.c. removable ON position white	EA	$123.18	$12.32	10	-
770/1KLOWE	Keylock switch 10A 240V a.c. removable OFF position white	EA	$121.45	$12.14	10	-
770KLIOWECK	Keylock switch 10A 240V a.c. key removable ON/OFF common key white	EA	$83.48	$8.35	10	-
700CCWE	Flexlock 240V a.c. white	EA	$8.98	$0.90	10	-
	Keytag switches					
770KT1	Keytag 2 x 20A switches & neon in base pocket 240V a.c. white	EA	$206.11	$20.61	10	-
770KT2	Keytag 10A ind. switch above 2 x 20A neon in base pocket 240V a.c. white	EA	$216.08	$21.61	10	-
770KT3	Keytag 10A ind. switch & neon above 2 x 20A neon in base pocket 240V a.c. white	EA	$246.52	$24.65	10	-
770KT4	Keytag 3 x 20A in base pocket 240V a.c. white	EA	$206.11	$20.61	10	-
770KT5	Keytag 10A ind. switch 3 x 20A & neon in base pocket 240V a.c. white	EA	$216.08	$21.61	10	-
770KT8	Keytag 10A indep. switch 2 x 20A & neon in top pocket 240V a.c. white	EA	$216.08	$21.61	10	-
770KT13	Keytag 3 x 20A switches & neon in base pocket 240V a.c. white	EA	$238.29	$23.83	10	-
770KT14	Keytag 4 x 20A in base pocket 240V a.c. white	EA	$239.79	$23.98	10	-
770KT16	Keytag 4 x 20A in top pocket 240V a.c. white	EA	$239.79	$23.98	10	-
770T3	Keytag with removable insert white	EA	$13.78	$1.38	10	-

Standard

Powerpoints

V787WE

787WE

787XWE

787/2XWE

1/788WE

790WE

Cat.Nos	Vertical powerpoints	UoM	Trade price $	GST $	Box qty	Carton qty
	Single powerpoints					
V787WE	Powerpoint 1 gang 10A 240V a.c. white	EA	$32.31	$3.23	10	200
	Single powerpoints with shaver outlet					
798VWE	Powerpoint 1 gang 10A 240V a.c. with shaver outlet white	EA	$288.19	$28.82	-	-
	Double powerpoints					
V777WE	Powerpoint 2 gang 10A 240V a.c. white	EA	$66.04	$6.60	10	120
V777XWE	Powerpoint 2 gang 10A 240V a.c. with extra switch white	EA	$79.48	$7.95	10	120
V777SWE	Powerpoint 2 gang 10A 240V a.c. with safety shutters white	EA	$85.26	$8.53	10	120
V777LKWE	Powerpoint 2 gang 10A 240V a.c. with pre-wired link white	EA	$59.96	$6.00	10	120
V777/15WE	Powerpoint 2 gang 15A 240V a.c. white	EA	$118.75	$11.88	10	120

	Horizontal powerpoints					
	Single powerpoints					
787WE	Powerpoint 1 gang 10A 240V a.c. white	EA	$17.74	$1.77	10	200
787BL	Powerpoint 1 gang 10A 240V a.c. black	EA	$17.74	$1.77	10	200
787XWE	Powerpoint 1 gang 10A 240V a.c. with extra switch white	EA	$38.08	$3.81	10	200
787/2XWE	Powerpoint 1 gang 10A 240V a.c. with 2 extra switches white	EA	$69.26	$6.93	10	200
787PWE	Powerpoint 1 gang double-pole 10A 240V a.c. white	EA	$42.21	$4.22	10	200
1/788WE	Powerpoint 1 gang 10A 240V a.c. deep plate white	EA	$37.56	$3.76	10	200
1/788BE	Powerpoint 1 gang 10A 240V a.c. deep plate beige	EA	$46.08	$4.61	10	200
1/788PWE	Powerpoint 1 gang double-pole 10A 240V a.c. deep plate white	EA	$46.08	$4.61	10	200
788PXWE	Powerpoint 1 gang double-pole 10A 240V a.c. with extra switch deep plate white	EA	$71.80	$7.18	10	200
788PXPWE	Powerpoint 1 gang 10A 240V a.c. with extra 2P switch deep plate white	EA	$91.05	$9.10	10	200
787SWE	Powerpoint 1 gang 10A 240V a.c. with shutters white	EA	$36.44	$3.64	10	200
787NSWE	Powerpoint 1 gang 10A 240V a.c. with safety shutters & neon white	EA	$67.12	$6.71	10	200
790WE	Powerpoint 1 gang 10A 240V a.c. narrow plate white	EA	$27.67	$2.77	10	200
790BL	Powerpoint 1 gang 10A 240V a.c. narrow plate black	EA	$27.67	$2.77	10	200
SQ787WE	Powerpoint 1 gang 10A 240V a.c. square plate white	EA	$51.29	$5.13	10	200
787/15WE	Powerpoint 1 gang 15A 240V a.c. white	EA	$41.44	$4.14	10	200
787/15BL	Powerpoint 1 gang 15A 240V a.c. black	EA	$35.65	$3.56	10	200
787/15SWE	Powerpoint 1 gang 15A 240V a.c. with safety shutters white	EA	$37.93	$3.79	10	200
787/15NSWE	Powerpoint 1 gang 15A 240V a.c. with safety shutters & neon white	EA	$77.65	$7.76	10	200
787P15WE	Powerpoint 1 gang double-pole 15A 240V a.c. white	EA	$54.04	$5.40	10	200

N New product | ECO Energy Saving products | More info available. See technical pages | COMING SOON Coming soon | Product to be discontinued

Whilst most items are stock lines some products are made to order. UoM = Unit Of Measure.
Prices are effective 1 June 2017 and are subject to change without notice. Trade prices exclude GST.

Standard

Powerpoints

738KLWE

777WE

777XWE

792WE

Cat.Nos	Horizontal powerpoints	UoM	Trade price $	GST $	Box qty	Carton qty
	Single powerpoints					
1/788P15WE	Powerpoint 1 gang 15A 240V a.c. deep plate white	EA	$53.87	$5.39	10	200
787/20WE	Powerpoint 1 gang 20A 240V a.c. white	EA	$50.51	$5.05	10	200
787P20WE	Powerpoint 1 gang double pole 20A 240V a.c. white	EA	$98.64	$9.86	10	200
787/25WE	Powerpoint 1 gang 25A 240V a.c. white	EA	$83.57	$8.36	10	200
787/32WE	Powerpoint 1 gang 32A 240V a.c. white	EA	$91.89	$9.19	10	200
	Keylock single powerpoints					
738KLWE	Keylock powerpoint 1 gang 10A 240V a.c. white	EA	$146.30	$14.63	10	200
738KLNWE	Keylock powerpoint 1 gang 10A 240V a.c. with neon white	EA	$182.92	$18.29	10	200
738KL15WE	Keylock powerpoint 1 gang 15A 240V a.c. white	EA	$158.95	$15.90	10	200
738KLN15WE	Keylock powerpoint 1 gang 15A 240V a.c. with neon white	EA	$192.78	$19.28	10	200
738KL20WE	Keylock powerpoint 1 gang 20A 240V a.c. white	EA	$212.77	$21.28	10	200
	No-volt single powerpoints					
787XNV	No-volt powerpoint 1 gang 10A 240V a.c. white	EA	$329.47	$32.95	10	200
787XNV15	No-volt powerpoint 1 gang 15A 240V a.c. white	EA	$413.95	$41.40	10	200
	Shaver outlet single powerpoint					
798HWE	Powerpoint 1 gang 10A 240V a.c. with shaver outlet white	EA	$272.32	$27.23	10	200
	Double powerpoints					
777WE	Powerpoint 2 gang 10A 240V a.c. white	EA	$27.62	$2.76	10	200
777BL	Powerpoint 2 gang 10A 240V a.c. black	EA	$27.62	$2.76	10	200
777CR	Powerpoint 2 gang 10A 240V a.c. cream	EA	$27.62	$2.76	10	200
777XWE	Powerpoint 2 gang 10A 240V a.c. with extra switch white	EA	$58.75	$5.88	10	200
777XSWE	Powerpoint 2 gang 10A 240V a.c. with extra switch & safety shutters white	EA	$96.02	$9.60	10	200
777SWE	Powerpoint 2 gang 10A 240V a.c. with safety shutters white	EA	$61.11	$6.11	10	200
777NSWE	Powerpoint 2 gang 10A 240V a.c. with safety shutters & neon white	EA	$98.13	$9.81	10	200
777NSRED	Powerpoint 2 gang 10A 240V a.c. with safety shutters & neon red	EA	$104.28	$10.43	10	200
777CHWE	Powerpoint 2 gang 10A 240V a.c. chemical resistant white	EA	$40.52	$4.05	10	200
777PWE	Powerpoint 2 gang double-pole 10A 240V a.c. white	EA	$66.95	$6.70	10	200
777PLKWE	Powerpoint 2 gang double-pole 10A 240V a.c. with pre-wired link white	EA	$65.02	$6.50	10	200
2/788PWE	Powerpoint 2 gang double-pole 10A 240V a.c. deep plate white	EA	$90.17	$9.02	10	200
2/788PBE	Powerpoint 2 gang double-pole 10A 240V a.c. deep plate beige	EA	$82.58	$8.26	10	200
792WE	Powerpoint 2 gang 10A 240V a.c. narrow plate white	EA	$48.57	$4.86	10	200
792BL	Powerpoint 2 gang 10A 240V a.c. narrow plate black	EA	$48.56	$4.86	10	200

N New product | ECO Energy Saving products | More info available. See technical pages | COMING SOON Coming soon | Product to be discontinued

Whilst most items are stock lines some products are made to order. UoM = Unit Of Measure.
Prices are effective 1 June 2017 and are subject to change without notice. Trade prices exclude GST.

Standard

Powerpoints

SQ777WE

777EL30

792BWE

3G788WE

Cat.Nos	Horizontal powerpoints	UoM	Trade price $	GST $	Box qty	Carton qty
	Double powerpoints					
777IDCL	Powerpoint 2 gang 10A 240V a.c. with 800/2CL blanking insert clear	EA	$38.29	$3.83	10	100
SQ777WE	Powerpoint 2 gang 10A 240V a.c. square plate white	EA	$89.05	$8.90	5	100
SQ777XWE	Powerpoint 2 gang 10A 240V a.c. with extra switch square plate white	EA	$101.31	$10.13	5	100
SQ777SWE	Powerpoint 2 gang 10A 240V a.c. with safety shutters square plate white	EA	$87.59	$8.76	5	100
777/1015WE	Powerpoint 2 gang 10 & 15A 240V a.c. white	EA	$80.07	$8.01	10	200
792/1015WE	Powerpoint 2 gang 10 & 15A 240V a.c. narrow plate white	EA	$103.66	$10.37	5	-
777/15WE	Powerpoint 2 gang 15A 240V a.c. white	EA	$110.78	$11.08	10	200
777/15SWE	Powerpoint 2 gang 15A 240V a.c. with safety shutters white	EA	$141.21	$14.12	10	200
777P15WE	Powerpoint 2 gang double-pole 15A 240V a.c. white	EA	$124.17	$12.42	10	200
792/15WE	Powerpoint 2 gang 15A 240V a.c. narrow plate white	EA	$117.36	$11.74	5	-
	RCD protected double powerpoints					
777EL30	Powerpoint 2 gang 10A 240V a.c. with RCD 30mA white	EA	$254.91	$25.49	2	100
777EL30ES	Powerpoint 2 gang 10A 240V a.c. with RCD 30mA & mounting bracket white	EA	$333.10	$33.31	2	100
777EL30G	Powerpoint 2 gang 10A 240V a.c. with RCD 30mA for generators white	EA	$460.88	$46.09	2	100
777EL30/1015	Powerpoint 2 gang 10 & 15A 240V a.c. with RCD 30mA white	EA	$409.67	$40.97	2	100
777EL10	Powerpoint 2 gang 10A 240V a.c. with RCD 10mA white	EA	$319.70	$31.97	2	100
777EL10N	Powerpoint 2 gang 10A 240V a.c. with RCD 10mA & neon white	EA	$455.89	$45.59	2	100
777EL10N3	Powerpoint 2 gang 10A 240V a.c. with RCD 10mA & 3 neons white	EA	$439.28	$43.93	2	100
777EL10ES	Powerpoint 2 gang 10A 240V a.c. with RCD 10mA & mounting bracket white	EA	$410.58	$41.06	2	100
777EL10/1015	Powerpoint 2 gang 10 & 15A 240V a.c. with RCD 10mA white	EA	$509.04	$50.90	2	100
777EL30G1015	Powerpoint 2 gang 10 & 15A 240V a.c. with RCD 30mA for generators white	EA	$270.54	$27.05	2	100
777EL30M	Electrasafe module 2 gang 10A 240V a.c. with RCD 30mA white	EA	$255.71	$25.57	2	100
	Narrow busbarred double powerpoints					
792BWE	Powerpoint 2 gang 10A 240V a.c. with narrow busbar white	EA	$48.56	$4.86	5	-
792BBL	Powerpoint 2 gang 10A 240V a.c. with narrow busbar black	EA	$48.56	$4.86	5	-
792B1015WE	Powerpoint 2 gang 10&15A 240V a.c. with narrow busbar white	EA	$88.87	$8.89	5	-
	Triple powerpoints					
3G788WE	Powerpoint 3 gang 10A 240V a.c. large plate white	EA	$158.97	$15.90	5	-

N New product | ECO Energy Saving products | More info available. See technical pages | COMING SOON Coming soon | Product to be discontinued

Whilst most items are stock lines some products are made to order. UoM = Unit Of Measure.
Prices are effective 1 June 2017 and are subject to change without notice. Trade prices exclude GST.

Standard

Phone, TV, data and AV sockets

770/1CXWE

1A770CXWE

770/1RJ2WE

Cat.Nos	TV outlets	UoM	Trade price $	GST $	Box qty	Carton qty
770/1CXWE	TV outlet coaxial 1 gang 75 Ohm white	EA	$11.50	$1.15	10	200
770/1FCXWE	TV outlet coaxial to F type 1 gang 75 Ohm white	EA	$10.92	$1.09	10	200
1A770CXWE	TV outlet coaxial 1 gang deep plate white	EA	$12.86	$1.29	10	200
	RJ45 outlets					
770/1RJ2WE	Data outlet RJ45 1 gang Cat5e white	EA	$22.23	$2.22	10	200
770/2RJ2WE	Data outlet RJ45 2 gang Cat5e white	EA	$38.54	$3.85	10	200

N New product | ECO Energy Saving products | More info available. See technical pages | COMING SOON Coming soon | Product to be discontinued

Whilst most items are stock lines some products are made to order. UoM = Unit Of Measure.
Prices are effective 1 June 2017 and are subject to change without notice. Trade prices exclude GST.

Standard

Plates

770/1PLWE

770/2PLBL

770/4PLCR

770/6PLWE

SQ770/1PLWE

Cat.Nos	Switch plates	UoM	Trade price $	GST $	Box qty	Carton qty
	Rectangle plates					
770/1PLWE	Plate 1 gang white	EA	$8.16	$0.82	20	400
770/1PLBL	Plate 1 gang black	EA	$8.16	$0.82	20	400
770/1PLCR	Plate 1 gang cream	EA	$8.16	$0.82	20	400
770/2PLWE	Plate 2 gang white	EA	$7.13	$0.71	20	400
770/2PLBL	Plate 2 gang black	EA	$7.13	$0.71	20	400
770/2PLCR	Plate 2 gang cream	EA	$7.13	$0.71	20	400
770/3PLWE	Plate 3 gang white	EA	$8.78	$0.88	20	400
770/3PLBL	Plate 3 gang black	EA	$8.78	$0.88	20	400
770/4PLWE	Plate 4 gang white	EA	$14.53	$1.45	20	400
770/4PLBL	Plate 4 gang black	EA	$14.08	$1.41	20	400
770/4PLCR	Plate 4 gang cream	EA	$14.08	$1.41	20	400
770/5PLWE	Plate 5 gang white	EA	$15.38	$1.54	20	400
770/5PLCR	Plate 5 gang cream	EA	$15.38	$1.54	20	400
770/6PLWE	Plate 6 gang white	EA	$16.86	$1.69	20	400
770/6PLBL	Plate 6 gang black	EA	$16.86	$1.69	20	400
770/6PLCR	Plate 6 gang cream	EA	$16.86	$1.69	20	400
	Square plates					
SQ770/1PLWE	Plate 1 gang square white	EA	$17.14	$1.71	20	-
SQ770/2PLWE	Plate 2 gang square white	EA	$17.14	$1.71	20	-
SQ770/3PLWE	Plate 3 gang square white	EA	$17.14	$1.71	20	-
SQ770/4PLWE	Plate 4 gang square white	EA	$17.14	$1.71	20	-
SQ770/5PLWE	Plate 5 gang square white	EA	$14.34	$1.43	20	-
SQ770/6PLWE	Plate 6 gang square white	EA	$17.14	$1.71	20	-
SQ770/7PLWE	Plate 7 gang square white	EA	$20.63	$2.06	20	-
SQ770/9PLWE	Plate 9 gang square white	EA	$19.61	$1.96	20	-
	Deep plates					
2/770PLWE	Plate 2 gang deep plate white	EA	$7.59	$0.76	10	-
	Flush caps					
FLUSHCAPS	Flush caps plastic white pack of 100	PAK	$1.95	$0.20	-	-

N New product | ECO Energy Saving products | More info available. See technical pages | COMING SOON Coming soon | Product to be discontinued

Whilst most items are stock lines some products are made to order. UoM = Unit Of Measure.
Prices are effective 1 June 2017 and are subject to change without notice. Trade prices exclude GST.

Standard

Plates

A770/1PLWE

AL770/11PLWE

770/0WE

770/1D1PLWE

Cat.Nos	Architrave plates	UoM	Trade price $	GST $	Box qty	Carton qty
A770/1PLWE	Architrave plate 1 gang white	EA	$5.16	$0.52	10	-
A770/2PLWE	Architrave plate 2 gang white	EA	$9.45	$0.94	10	-
A770/3PLWE	Architrave plate 3 gang white	EA	$12.47	$1.25	10	-
A770/4PLWE	Architrave plate 4 gang white	EA	$18.57	$1.86	10	-
AS770/1PLWE	Architrave plate 1 gang small white	EA	$5.26	$0.53	10	-
AS770/2PLWE	Architrave plate 2 gang small white	EA	$9.93	$0.99	10	-
	Intermediate size plates					
AL770/11PLWE	Plate 1 gang intermediate size 55mm m. centres white	EA	$8.57	$0.86	20	-
AL770/12PLWE	Plate 1 gang intermediate size 79mm m. centres white	EA	$8.04	$0.80	20	-
AL770/21PLWE	Plate 2 gang intermediate size 55mm m. centres white	EA	$11.30	$1.13	10	-
AL770/22PLWE	Plate 2 gang intermediate size 79mm m. centres white	EA	$15.05	$1.50	20	-
	Deep switch plates					
1A770PLWE	Switch plate 1 gang deep plate white	EA	$8.15	$0.82	20	400
	Blank plates					
770/0WE	Blank plate white	EA	$8.33	$0.83	20	200
770/0BL	Blank plate black	EA	$8.33	$0.83	20	200
SQ770/0WE	Blank plate square white	EA	$16.67	$1.67	20	-
	Computer plates					
770/1D1PLWE	Plate 1 gang computer & data white	EA	$14.89	$1.49	20	-
770/1D3PLWE	Plate 1 gang computer outlet 1x25 pin white	EA	$13.64	$1.36	20	-
770/2D3PLWE	Plate 1 gang computer outlet 2x25 pin white	EA	$13.10	$1.31	20	-

N New product | ECO Energy Saving products | More info available. See technical pages | COMING SOON Coming soon | Product to be discontinued

Whilst most items are stock lines some products are made to order. UoM = Unit Of Measure.
Prices are effective 1 June 2017 and are subject to change without notice. Trade prices exclude GST.

Aqua

Weatherproof switches

WS171/1

WS171/4

WS170

2WS170/15

WS170/15

Cat.Nos	Switches	UoM	Trade price $	GST $	Box qty	Carton qty
	Rocker switches IP56					
WS171/1	Switch 1 gang IP56 10A 240V a.c. mist grey	EA	$38.94	$3.89	3	60
WS171/1/15	Switch 1 gang IP56 15A 240V a.c. mist grey	EA	$41.73	$4.17	3	60
WS171/1/20	Switch 1 gang IP56 20A 240V a.c. mist grey	EA	$63.57	$6.36	3	60
WS171/2	Switch 2 gang IP56 10A 240V a.c. mist grey	EA	$51.67	$5.17	3	60
WS171/4	Switch 4 gang IP56 10A 240V a.c. mist grey	EA	$77.91	$7.79	3	60
	Rotary switches IP56					
WS170	Rotary switch 1 gang IP56 10A 240V a.c. mist grey	EA	$39.02	$3.90	5	60
WS170N	Rotary switch 1 gang IP56 10A 240V a.c. with neon mist grey	EA	$75.61	$7.56	5	60
WS170P	Rotary switch 1 gang double-pole IP56 10A 240V a.c. mist grey	EA	$65.08	$6.51	5	60
WS170/15	Rotary switch 1 gang IP56 15A 240V a.c. mist grey	EA	$41.08	$4.11	5	60
WS170/20	Rotary switch 1 gang IP56 20A 240V a.c. mist grey	EA	$55.10	$5.51	5	60
WS170/202	Rotary switch 1 gang 1-2 way & loop IP56 20A 240V a.c. mist grey	EA	$56.48	$5.65	5	60
WS170/20P	Rotary switch 1 gang double-pole IP56 20A 240V a.c. mist grey	EA	$92.85	$9.28	5	60
WS170/35	Rotary switch 1 gang IP56 35A 240V a.c. mist grey	EA	$61.99	$6.20	5	60
2WS170	Rotary switch 2 gang IP56 10A 240V a.c. mist grey	EA	$56.79	$5.68	5	60
2WS170PP	Rotary switch 2 gang double-pole IP56 10A 240V a.c. mist grey	EA	$83.41	$8.34	5	60
2WS170/15	Rotary switch 2 gang IP56 15A 240V a.c. mist grey	EA	$64.43	$6.44	5	60
	Push button switches IP56					
WS170X	Push button 1 gang IP56 15A 240V a.c. mist grey	EA	$58.76	$5.88	5	60
	Isolating switches IP56 - 1, 2 and 3 - pole					
42/120	Isolator switch 1 gang IP56 20A 240V a.c. plain entries mist grey	EA	$72.67	$7.27	-	24
42/120MT	Isolator switch 1 gang IP56 20A 240V a.c. thread entries mist grey	EA	$72.67	$7.27	-	24
42/220	Isolator switch 1 gang double-pole IP56 20A 240V a.c. plain entries mist grey	EA	$83.30	$8.33	-	24
42/220MT	Isolator switch 1 gang double-pole IP56 20A 240V a.c. thread entries mist grey	EA	$83.30	$8.33	-	24
42/320	Isolator switch 1 gang three-pole IP56 20A 240V a.c. plain entries mist grey	EA	$76.91	$7.69	-	24
42/320MT	Isolator switch 1 gang three-pole IP56 20A 240V a.c. thread entries mist grey	EA	$76.91	$7.69	-	24
42/235	Isolator switch 1 gang double-pole IP56 35A 240V a.c. plain entries mist grey	EA	$103.78	$10.38	-	24
42/235MT	Isolator switch 1 gang double-pole IP56 35A 240V a.c. thread entries mist grey	EA	$103.78	$10.38	-	24
42/335	Isolator switch 1 gang three-pole IP56 35A 240V a.c. plain entries mist grey	EA	$116.47	$11.65	-	24
42/355	Isolator switch 1 gang three-pole IP56 55A 240V a.c. plain entries mist grey	EA	$128.55	$12.86	-	24
42/355MT	Isolator switch 1 gang three-pole IP56 55A 240V a.c. thread entries mist grey	EA	$128.55	$12.86	-	24

N New product | ECO Energy Saving products | More info available. See technical pages | COMING SOON Coming soon | Product to be discontinued

Whilst most items are stock lines some products are made to order. UoM = Unit Of Measure.
Prices are effective 1 June 2017 and are subject to change without notice. Trade prices exclude GST.

Aqua

Weatherproof switches, light sensitive switches

WS170/20KLI

PE170/10

PE170R2

Cat.Nos	Switches	UoM	Trade price $	GST $	Box qty	Carton qty
	Keylock switches IP53					
WS170KLI	Keylock switch 1 gang IP53 10A 240V a.c. removable ON pos. mist grey	EA	$106.74	$10.67	5	-
WS170KLIO	Keylock switch 1 gang IP53 10A 240V a.c. removable ON/OFF pos. mist grey	EA	$106.74	$10.67	5	-
WS170/20KLI	Keylock switch 1 gang IP53 20A 240V a.c. removable ON pos. mist grey	EA	$125.47	$12.55	5	-
WS170/20KLIO	Keylock switch 1 gang IP53 20A 240V a.c. removable ON/OFF pos. mist grey	EA	$125.47	$12.55	5	-
	Light sensitive switches IP56					
PE170/10	Light sensitive switch 2400W 3 wire IP56 10A 240V a.c. grey	EA	$123.23	$12.32	-	60
PE170R2	Light sensitive switch 5-2000Lux 2400W 3 wire IP56 10A 240V a.c. program off at 30mn steps grey	EA	$132.54	$13.25	-	60

Aqua

Powerpoints

WS53/1MG

WS53/2MG

2WS38

WS53F/2MG

WS40

WS54/1MG

Cat.Nos	Powerpoints	UoM	Trade price $	GST $	Box qty	Carton qty
	Single powerpoints IP33 - surface mount					
WS38	Powerpoint 1 gang IP33 10A 240V a.c. mist grey	EA	$57.11	$5.71	2	72
WS38P	Powerpoint 1 gang double-pole IP33 10A 240V a.c. mist grey	EA	$77.47	$7.75	2	72
WS38R	Powerpoint 1 gang IP33 10A 240V a.c. with round earth mist grey	EA	$81.63	$8.16	2	72
WS38/15	Powerpoint 1 gang IP33 15A 240V a.c. mist grey	EA	$73.35	$7.34	2	72
	Single powerpoints IP53 - surface mount					
WS53/1MG	Powerpoint 1 gang IP53 10A 240V a.c. mist grey	EA	$43.81	$4.38	-	40
WS53/1WE	Powerpoint 1 gang IP53 10A 240V a.c. white	EA	$43.92	$4.39	-	40
WS53/1/XMG	Powerpoint 1 gang IP53 10A 240V a.c. with extra switch mist grey	EA	$91.20	$9.12	-	40
WS53/1/15MG	Powerpoint 1 gang IP53 15A 240V a.c. mist grey	EA	$70.52	$7.05	-	40
WS53/1/15WE	Powerpoint 1 gang IP53 15A 240V a.c. white	EA	$70.52	$7.05	-	40
WS40	Powerpoint 1 gang IP53 10A 240V a.c. with side operating lever mist grey	EA	$51.45	$5.14	5	60
WS40/15	Powerpoint 1 gang IP53 15A 240V a.c. with side operating lever mist grey	EA	$70.48	$7.05	5	60
	Single powerpoints IP54 - surface mount					
WS54/1MG	Powerpoint 1 gang IP54 10A 240V a.c. mist grey	EA	$43.58	$4.36	5	60
	Single powerpoints IP53 - flush mount					
WS53F/1MG	Powerpoint 1 gang flush mount IP53 10A 240V a.c. mist grey	EA	$48.60	$4.86	-	40
WS53F/1WE	Powerpoint 1 gang flush mount IP53 10A 240V a.c. white	EA	$48.60	$4.86	-	40
WS53F/1/15MG	Powerpoint 1 gang flush mount IP53 15A 240V a.c. mist grey	EA	$70.52	$7.05	-	40
	Double powerpoints IP33 - surface mount - padlockable					
2WS38	Powerpoint 2 gang IP33 10A 240V a.c. mist grey	EA	$89.06	$8.91	-	40
2WS38P	Powerpoint 2 gang double-pole IP33 10A 240V a.c. mist grey	EA	$118.65	$11.86	-	40
2WS38R	Powerpoint 2 gang IP33 10A 240V a.c. with round earth mist grey	EA	$123.54	$12.35	-	40
	Double powerpoints IP53 - surface mount					
WS53/2MG	Powerpoint 2 gang IP53 10A 240V a.c. mist grey	EA	$72.80	$7.28	-	40
WS53/2WE	Powerpoint 2 gang IP53 10A 240V a.c. white	EA	$72.95	$7.30	-	40
WS53/2/15MG	Powerpoint 2 gang IP53 15A 240V a.c. mist grey	EA	$125.43	$12.54	-	40
	Double powerpoints IP53 - flush mount					
WS53F/2MG	Powerpoint 2 gang flush mount IP53 10A 240V a.c. mist grey	EA	$81.23	$8.12	-	40
WS53F/2WE	Powerpoint 2 gang flush mount IP53 10A 240V a.c. white	EA	$81.23	$8.12	-	40

N New product | ECO Energy Saving products | More info available. See technical pages | COMING SOON Coming soon | Product to be discontinued

Whilst most items are stock lines some products are made to order. UoM = Unit Of Measure.
Prices are effective 1 June 2017 and are subject to change without notice. Trade prices exclude GST.

Soliroc

Switches, powerpoints & mechanisms

77893

77894

77811

77827

77874

69795

Cat.Nos	Complete switch and powerpoint	UoM	Trade price $	GST $	Box qty	Carton qty
	Switch					
77893	Switch 1 gang 2 way IP55 IK10 10A 250V a.c. metal silver	EA	$120.24	$12.02	-	-
	Single powerpoints					
77894	Powerpoint 1 gang IP55 IK10 10A 240V a.c. metal silver	EA	$157.20	$15.72	-	-
	Switch mechanisms					
	Rocker switch mechanisms					
77811	Switch mech. 2 way IP55 IK10 10A 250V a.c. magnesium	EA	$63.04	$6.30	-	10
77812	Switch mech. illuminated 2 way IP55 IK10 10A 250V a.c. magnesium	EA	$84.86	$8.49	-	10
77814	Switch mech. ON indicator with lamp 2 way IP55 IK10 10A 250V a.c. magnesium	EA	$84.86	$8.49	-	10
77822	Switch mech. double-pole IP55 IK10 20A 250V a.c. magnesium	EA	$113.51	$11.35	-	10
77821	Switch mech. intermediate IP55 IK10 10A 250V a.c. magnesium	EA	$107.19	$10.72	-	10
	Push-button mechanisms					
77841	Switch mech. 2 way IP55 IK10 6A 230V a.c. magnesium	EA	$63.41	$6.34	-	10
	Automatic switch mechanisms					
77827	Auto. switch mech. IP55 IK10 400W 2 wire magnesium 3-10m 180° 3-1000 lux	EA	$179.55	$17.96	-	10
	Key switch mechanisms					
77874	Key switch mech. double-pole IP54 IK10 6A 230V a.c. removable ON/OFF magnesium	EA	$152.03	$15.20	-	10
77875	Key switch mech. IP54 IK10 6A 230V a.c. removable OFF magnesium	EA	$152.03	$15.20	-	10
69795	Key barrel european IP54 IK10 with set of 3 keys silver	EA	$56.30	$5.63	-	10
	Indicator mechanisms					
77868	Illuminated sign IP55 IK10 white LEDs 0.2/1W 230V a.c. white	EA	$71.20	$7.12	-	10
77867	Passageway light IP55 IK10 white LEDs 2W 250V a.c. white	EA	$277.34	$27.73	-	10
	Light sensitive switch mechanisms					
77828	Light sensitive switch IP55 IK10 1400W 230V a.c. magnesium 0.5 - 1500 lux	EA	$116.13	$11.61	-	10
	Time-delay switch mechanisms					
77823	Time-delay mech. IP55 1000W 230V a.c. 25s-15mn 2 wire white	EA	$189.50	$18.95	-	10

N New product | ECO Energy Saving products | More info available. See technical pages | COMING SOON Coming soon | Product to be discontinued

Whilst most items are stock lines some products are made to order. UoM = Unit Of Measure.
Prices are effective 1 June 2017 and are subject to change without notice. Trade prices exclude GST.

Soliroc

Coverplates & installation accessories

77891

77851

80051

80052

77880A

80251

Cat.Nos	TV, phone, data and AV sockets	UoM	Trade price $	GST $	Box qty	Carton qty
77891	Data outlet 1 gang RJ45 FTP Cat6 magnesium	EA	$47.44	$4.74	-	10
	Horizontal coverplates					
77851	Coverplate 1 gang 110x110m metal silver	EA	$55.11	$5.51	-	40
77852	Coverplate 2 gang 110x181mm metal silver	EA	$75.21	$7.52	-	10
77853	Coverplate 3 gang 110x252mm metal silver	EA	$102.03	$10.20	-	10
	Flush mounting boxes					
	Plastic flush mount boxes for plasterboard					
80051	Flush mount box 1 gang Ø67mm x 50mm deep	EA	$2.70	$0.27	-	50
80052	Flush mount box 2 gang Ø67mm x 50mm deep	EA	$4.28	$0.43	-	30
80053	Flush mount box 3 gang Ø67mm x 50mm deep	EA	$6.71	$0.67	-	30
	Flush mount boxes for brick walls					
80151	Flush mount box 1 gang plastic	EA	$2.68	$0.27	-	100
	Surface mounting boxes					
77890	Surface mount box 1 gang 110x110x45mm	EA	$28.82	$2.88	-	-
77892	Surface mount box 2 gang 100x181x45mm	EA	$48.76	$4.88	-	-
	Adaptors					
77880A	Adaptor with cover for 2 module mechs IP55 IK10 metal silver	EA	$84.05	$8.40	-	20
77881	Adaptor for 2 module mechs IP20 metal silver	EA	$31.38	$3.14	-	20
77884A	Adaptor with cover & key for 2 module mechs IP55 IK10 metal silver	EA	$137.67	$13.77	-	20
	Blanking plugs					
77896	Blanking plugs removable only by drilling set of 4	EA	$7.21	$0.72	5	250
	Foam seals					
77885	Foam seal for 1 gang plate	EA	$4.40	$0.44	-	30
77886	Foam seal for 2 gang plate	EA	$9.02	$0.90	-	20
77887	Foam seal for 3 gang plate	EA	$13.19	$1.32	-	40
	Holesaw					
80067	Holesaw for Batibox 1 to 4 gang with extractor pilot drill with carbide tip	EA	$79.55	$7.96	-	20
	Supports					
80251	Universal support for all type of screw-mounting bases 1 gang - 2 modules	EA	$2.13	$0.21	10	100

N New product | ECO Energy Saving products | More info available. See technical pages | COMING SOON Coming soon | Product to be discontinued

Whilst most items are stock lines some products are made to order. UoM = Unit Of Measure.
Prices are effective 1 June 2017 and are subject to change without notice. Trade prices exclude GST.

Linea - vertical switches 10A with 84mm mounting centres

Cat No. LN770/1, LN770/6

Dimensions

Cat No. LN770/1

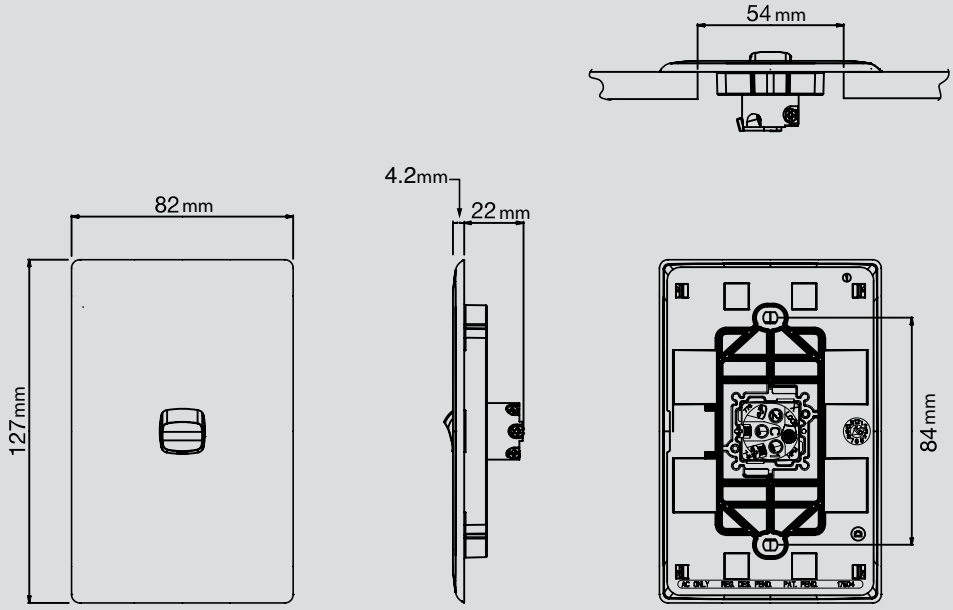

Cat No. LN770/6

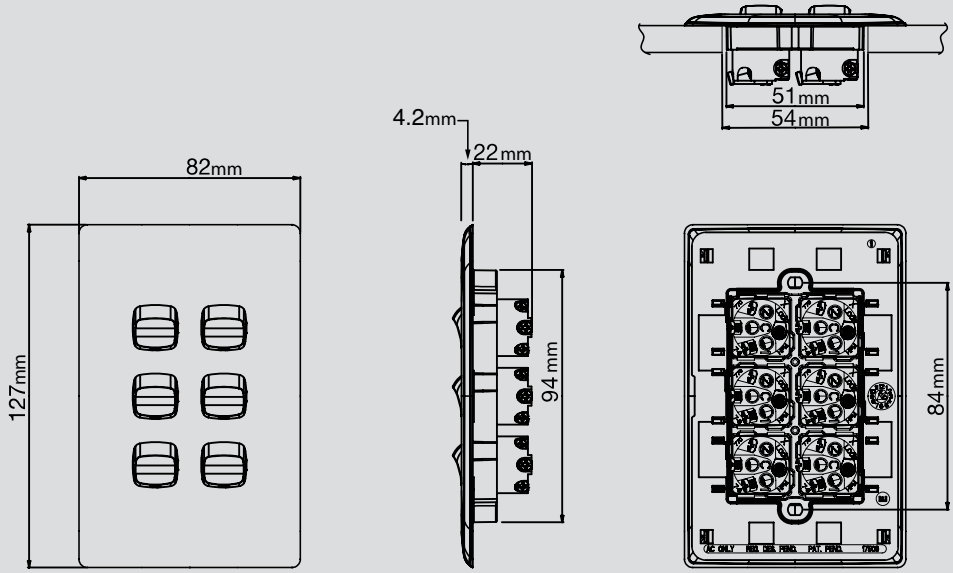

Linea - double powerpoints 10A with 84mm mounting centres

Cat No. LN777, LN777A

Dimensions

Cat No. LN777

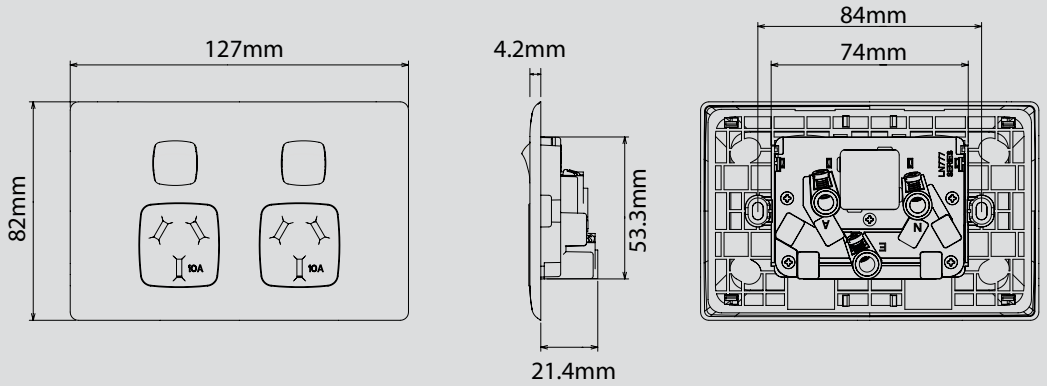

Cat No. LN777A (autoswitch)

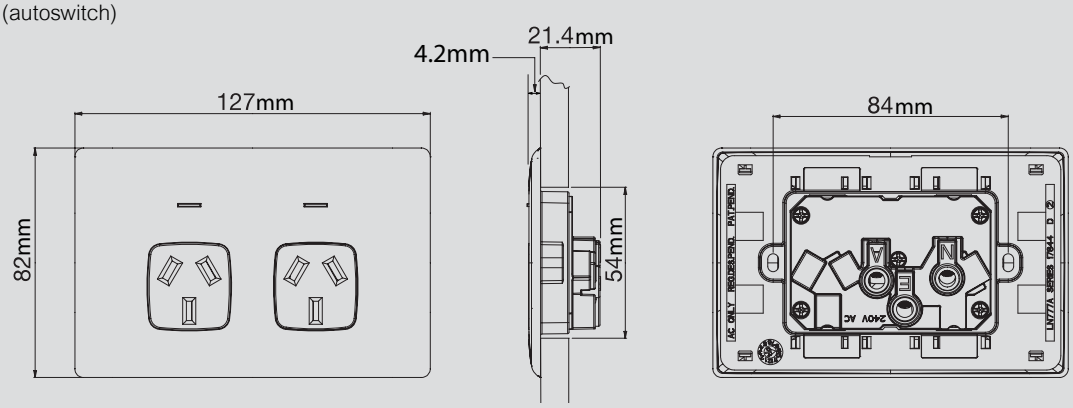

Excel Life - remote control light dimmer

Cat No. EM2000ERC

Installation

Cat No. EM2000ERC

The dimmer unit is in a surface mounting enclosure complete with terminal cover. (Size: 100mm W; 45mm H; 190mm L, with Ø4mm mounting holes.) For typical installation examples see Fig 1 to Fig 3.

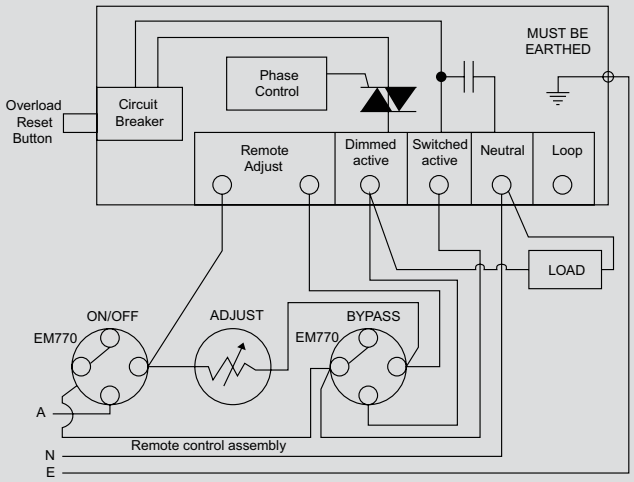

Note: Cat No. EM770 not supplied

Fig 1. One-way wiring diagram with bypass

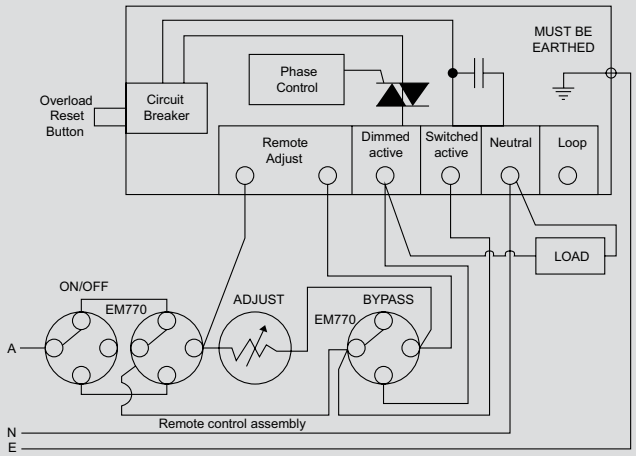

Note: Cat No. EM770 not supplied

Fig 2. Two-way wiring diagram with bypass

Operation

The light level is controlled by the knob. Clockwise rotation increases brightness. The minimum preset is accessible through a small hole on the side of the dimmer unit. This is useful when controlling fluorescent lighting levels to prevent flicker. It is adjusted using a screwdriver, when the remote mounted control is set to minimum brightness.

The circuit breaker on the left hand side can be reset by pushing in the centre button. Before resetting, the cause of the overload should be found.

Globes mounted with base down can produces high current through the dimmer if filaments fall across lead in wires. This does not occur if lamps are mounted normally with base up.

Dimmer units must not be mounted under insulation, and dimmer units mounted in enclosures must be either derated or adequately ventilated. Units must be derated when above their rated temperature up to their limit of 75°C max. Derate 2% for every 1°C above 25°C.

Account must also be taken of adjacent heat producing sources such as other dimmers etc.

This Legrand dimmer has filters for radio frequency interference suppression, but care must still be taken to ensure that wiring between the dimmer and load is distanced from electronic equipment and aerial inputs.

Excel Life - electronic push-button dimmers and time-delay switches

Cat No. EM400A2P, EM400A3P, EM802TD, EM803TD

Electronic push-button dimmer EM400A2P technical characteristics

+ 50°C + 0°C 230-240V a.c. 50Hz	1 x 2.5mm² 2 x 1.5mm²	■ Incandescent ■ Halogen	■ Halogen or dimmable LED with electronic transformer ■ Dimmable compact fluorescent ■ Dimmable LED without transformer		■ Halogen with wirebound transformer	Fluorescent tube	Fan motor
			Max Power	**Max number of transformers[1]**			
Max load	1 dimmer per plate	350W	350VA	8	X	X	X
	2 dimmers per plate	300W	300VA	8	X	X	X
	3 or more dimmers per plate	250W	250VA	8	X	X	X

Note:
1. In the case of dimmable compact florescent or dimmable LED without transformer, this is the maximum number of lamps.
2. Where both max power and max number of transformers/lamps are specified, both conditions must be satisfied.
3. When used in ambient temperatures greater than 25ºC, the dimmer must be de-rated by 10% for every increase of 5ºC.
4. This product is not compatible with all dimmable LED's and should be bench tested prior to installation.

Electronic push-button dimmer EM400A3P technical characteristics

+ 50°C + 0°C 230-240V a.c. 50Hz	1 x 2.5mm² 2 x 1.5mm²	■ Incandescent ■ Halogen	■ Halogen or dimmable LED with electronic transformer ■ Dimmable compact fluorescent ■ Dimmable LED without transformer		■ Halogen or dimmable LED with wirewound transformer[2]		Fluorescent tube	Fan motor
			Max Power	**Max number of transformers[1]**	**Max Power**	**Max number of transformers**		
Max load	1 dimmer per plate	350W	350VA	8	300VA	6	X	X
	2 dimmers per plate	350W	350VA	8	250VA	6	X	X
	3 or more dimmers per plate	300W	300VA	8	200VA	6	X	X

Minimum load = 3VA for all load types
Note: This product is not compatible with all dimmable LED's and should be bench tested prior to installation

Electronic push-button time-delay EM802TD/EM803TD technical characteristics

+ 50°C + 0°C 230-240V a.c. 50Hz	1 x 2.5mm² 2 x 1.5mm²	Incandescent	Halogen	Fluorescent tube	Wirewound transformer	Electronic transformer	Compact fluorescent	LED	Fan motor
Max load (802TD)		400W	400W	400VA*	X	400VA	400VA	400VA	X
Max load (803TD)		1200W	1200W	500VA	500VA	500VA	500VA	500VA	500VA

Minimum load = 10VA for all load types
* Electronic ballast only

Wiring EM802TD

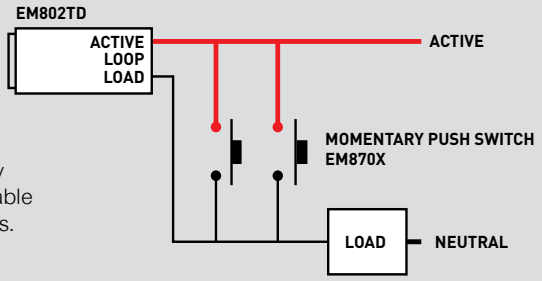

■ Connect optional Momentary Push Switches (EM770X) to enable switching from multiple locations.

Important:
An unlimited number of EM770XWE can be connected to an EM802TD. However, the total length of the load wire used to interconnect all of the EM770XWE should not exceed 50 metres.

Note:
For other technical details please refer to the installation instructions of each device.

Load compatibility disclaimer:
Although significant efforts have been made to ensure dimmers are compatible with a large variety of drivers (CFL, LEDs), it is not possible to guarantee 100% compatibility with all devices.

Excel Life - rotary dimmers

Cat No. EM250TR, EM400TR, EM700TR

Rotary dimmers - EM250TR/EM400TR/EM700TR technical characteristics

+ 50°C + 0°C 230-240V a.c. 50Hz	1 x 2.5mm² 2 x 1.5mm²	Incandescent	Halogen	Fluorescent tube	Wirewound transformer	Electronic transformer	Compact fluorescent	LED	Fan motor
Max load EM250TR	1 dimmer per plate	250W	250W	X	X	250VA	250VA see note	X	X
	2 dimmers per plate	225W	225W	X	X	225VA	225VA see note	X	X
	3 or more dimmers per plate	200W	200W	X	X	200VA	200VA see note	X	X
Max load EM400TR	1 dimmer per plate	400W	400W	X	X	400VA	400VA see note	X	X
	2 dimmers per plate	350W	350W	X	X	350VA	350VA see note	X	X
	3 dimmers per plate	300W	300W	X	X	300VA	300VA see note	X	X
Max load EM700TR	1 dimmer per plate	700W	700W	X	X	700VA	700VA see note	X	X

Minimum load = 10VA for all load types

Note

Compact Fluorescent Lamps (CFLs) and LCDs, also known as Energy Saving Lamps, can only be dimmed if they are specifically marked as "dimmable". Dimmable CFLs may have different characteristics from brand to brand, and so each brand may require a specific type of dimmer to operate correctly. Using the incorrect dimmer may cause the CFL to flicker. Please read the documentation that comes with each CFL carefully to ensure that the CFL and dimmer are compatible. For more information, please contact Legrand Australia. In some cases, the dimmable CFL may turn off or flicker when dimmed to a very low brightness. This can be overcome by ensuring that the dimmer brightness is not set too low. See "Setting minimum brightness" for instructions on how to achieve this.

Wiring for rotary dimmers

One-way wiring diagram

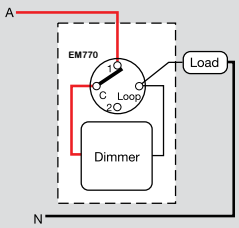

Two-way wiring diagram

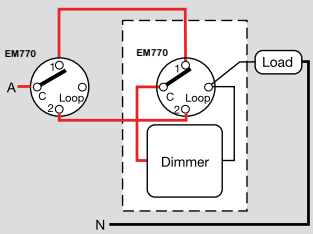

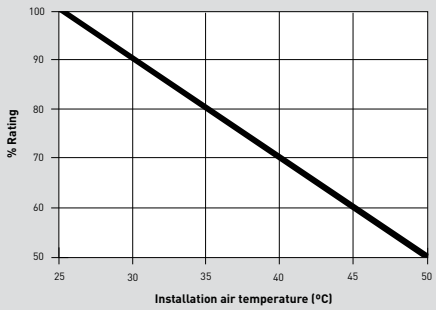

Important:
When used in ambient temperatures greater than 25°C, the dimmer must be de-rated according to the following chart.

Excel Life - mechanical switch mechanism wiring diagrams

Cat No. EM770, EM770RD, EM770/20, EM770/20RD, EM770DP, EM770DPRD, EM770/20DP, EM770IM, EM770/25, EM770/32, EM770DUO

1 & 2 Way (SPDT) EM770 Series 240V a.c.

Cat. No.	Legend	Loop	Amp Rating	Body Colour
EM770 / EM770RD	SPDT	1L	16A/16AX	Black
EM770/20 / EM770/20RD	SPDT	1L	20A/20AX	Black

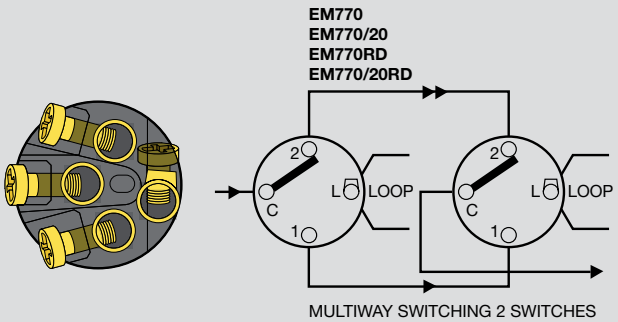

1 Way (SPST) EM770 Series 240V a.c.

Cat. No.	Legend	Loop	Amp Rating	Body Colour
EM770/25	SPST	1L	25A/20AX	Grey
EM770/32	SPST	1L	32A/20AX	Grey

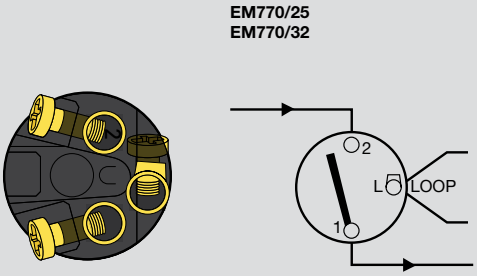

Double Pole (DPST) EM770DP Series 240V a.c.

Cat. No.	Legend	Loop	Amp Rating	Body Colour
EM770DP / EM770DPRD	DPST	0L	16A/10AX	Blue
EM770/20DP	DPST	0L	20A/10AX	Blue

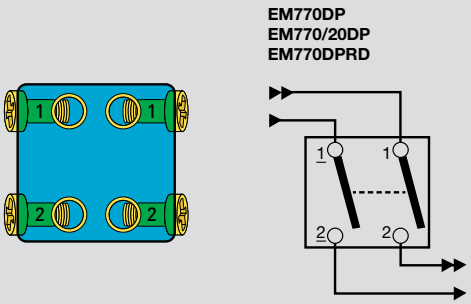

Duo Series 2 x 1 Way (2 x SPST) 240V a.c.

Cat. No.	Legend	Loop	Amp Rating	Body Colour
EM770DUO	2xSPST	0L	16A/10AX	White

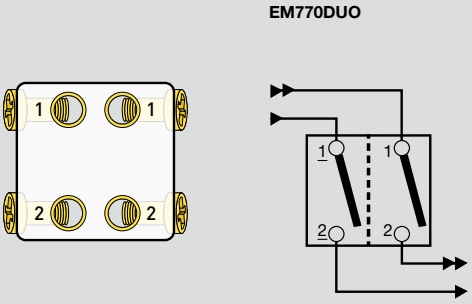

Intermediate (DPXT - Crossover) EM770I Series 240V a.c.

Cat. No.	Legend	Loop	Amp Rating	Body Colour
EM770IM	DPXT	0L	16A	Red

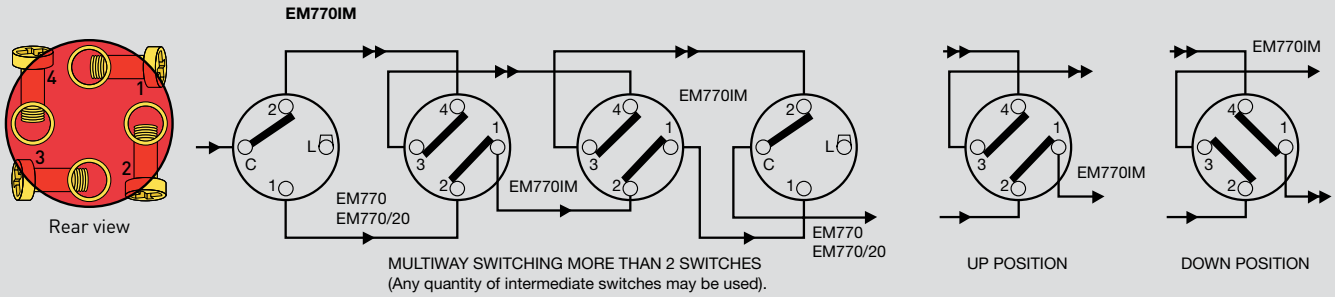

Excel Life - mechanical switch mechanism wiring diagrams

Cat No. EM770/20KT, EM820KLO, EM820KLI, EM820KLIO, EM770X

KeyTag - 1 Way (SPST) EM770/20KT

Cat. No.	Legend	Loop	Amp Rating	Motor Rating	Body Colour
EM770/20KT	SPST	1L	20A	M80	Black

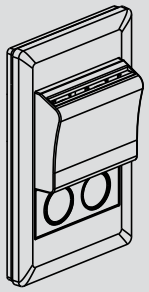

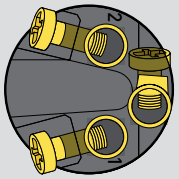

Rear view EM770/20KT

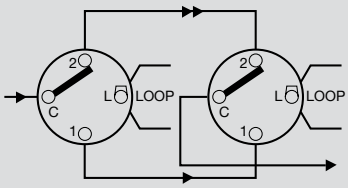

MULTIWAY SWITCHING 2 SWITCHES

Keylock Switch Assembly - 1 & 2 Way (SPDT) 770 Series 240V a.c.

Cat. No.	Legend	Loop	Amp Rating	Motor Rating	Body Colour
EM820KLO	SPDT	1L	20A	M80	Black
EM820KLI	SPDT	1L	20A	M80	Black
EM820KLIO	SPDT	1L	20A	M80	Black

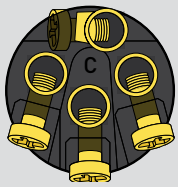

Rear view EM820KL

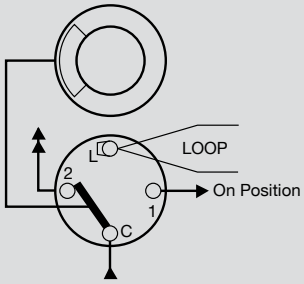

Colour code (Position in which key can be removed).

WHITE – OFF (O)
GREY – ON (I)
BEIGE – ON (I) and OFF (O)

Legend

SPST = single pole, single throw
SPDT = single pole, double throw
DPDT = double pole, double throw
DPST = double pole, single throw
DPXT = double pole cross-over
NC = normally closed
NO = normally opened
L = Loop

Using X Rating

Excel Life series switches marked with an 'X' are suitable for fluorescent installations up to the switch rating.

Push-Buttons (Bell Push) Single Pole - Normally Open EM770X Series 240V a.c.

Cat. No.	Legend	Loop	Amp Rating	Body Colour
EM770X	SPST-NO	0	16A	White

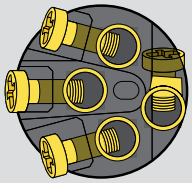

Rear view EM770X

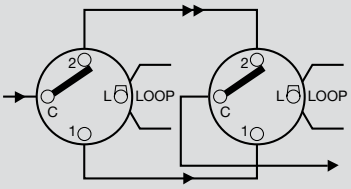

MULTIWAY SWITCHING 2 SWITCHES

Excel Life - electronic push-button switch mechanism wiring diagrams

Cat No. EM883

Electronic push-button switch wiring diagram EM883WE

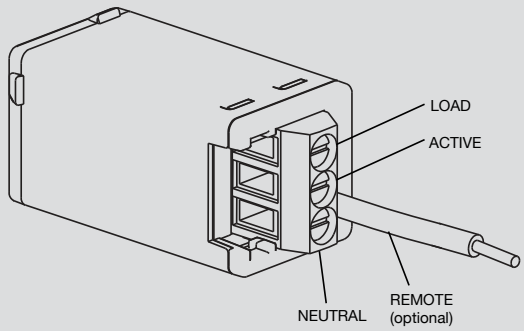

Rear view EM883

- Connect optional Secondary Control Buttons (EM800SLAVE) to enable switching from multiple locations.

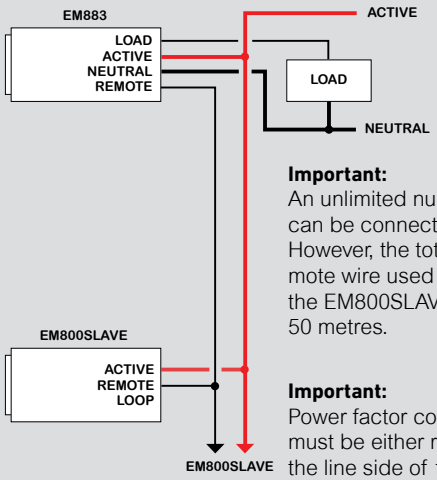

Important:
An unlimited number of EM800SLAVE can be connected to an EM883. However, the total length of the remote wire used to interconnect all of the EM800SLAVE should not exceed 50 metres.

Important:
Power factor correction capacitors must be either removed or placed on the line side of the electronic push button switch.

Technical characteristics

+ 50°C / + 0°C / 230-240V a.c. 50Hz	1 x 2.5mm² 2 x 1.5mm²	Incandescent	Halogen	Fluorescent tube	Wirewound transformer	Electronic transformer	Compact fluorescent	LED	Fan motor
Max load		1200W	1200W	500VA	500VA	500VA	500VA	500VA	500VA

MINIMUM LOAD = 10VA FOR ALL LOAD TYPES

LED Indicator

- The colour of the LED indicator can be either red or blue. In addition, when the switch is off the LED indicator can either glow faintly or be off completely. The four possible modes are in the table on the right.
- To change between modes, press and hold the push-button for at least 10 seconds. This will select the next mode in the sequence above.

Mode	Status of LED indicator	
	Switch on	Switch off
1	Bright Red	Faint Red
2	Bright Blue	Faint Blue
3	Bright Red	Off
4	Bright Blue	Off

Excel Life - rotary switch

Cat No. EMRS

Installation

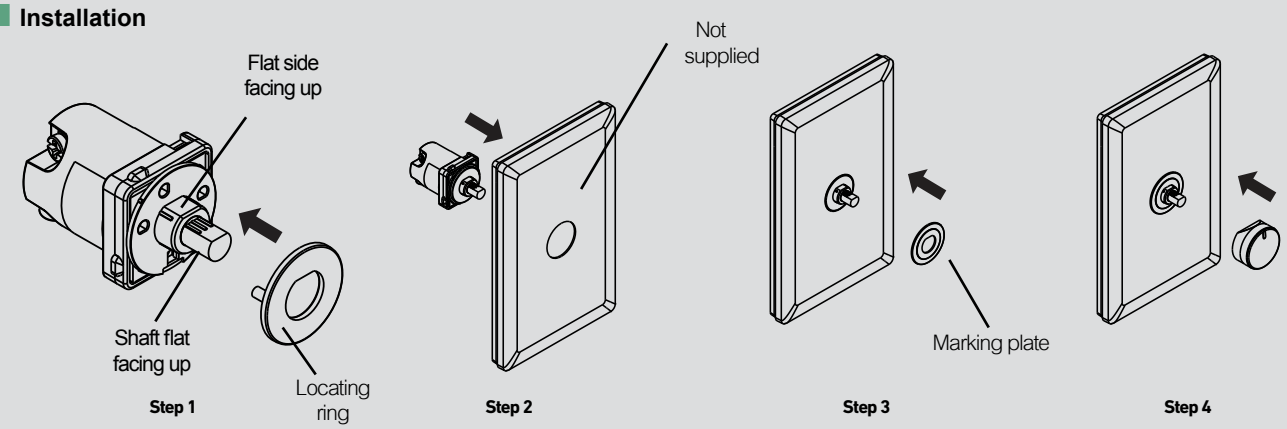

Rotation ring options

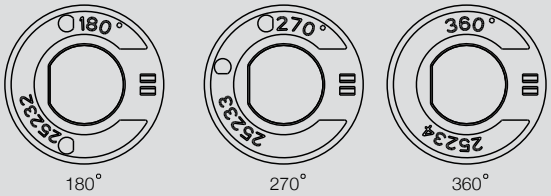

Marking plate options

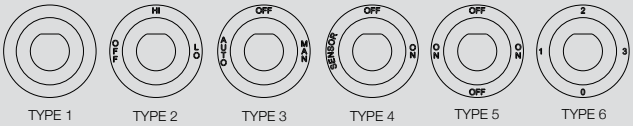

Wiring for 360º rotation

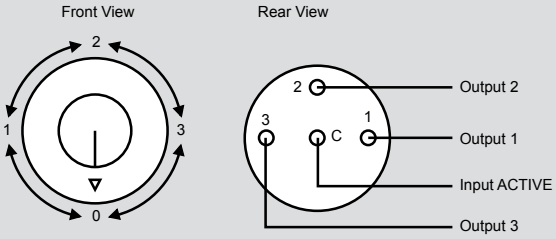

Select one of the following wiring options:

POSITION				WIRING
0	1	2	3	
OFF	ON	ON	ON	Connect All Terminals
OFF	ON	OFF	ON	Do Not Connect Terminal 2

Wiring for 270º rotation

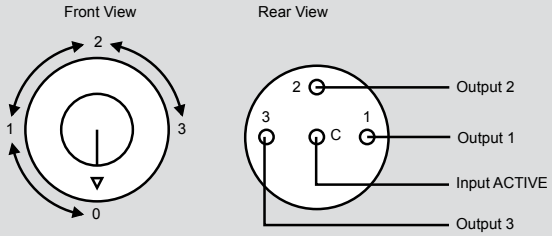

Select one of the following wiring options:

POSITION				WIRING
0	1	2	3	
OFF	ON	ON	ON	Connect All Terminals

Wiring for 180º rotation

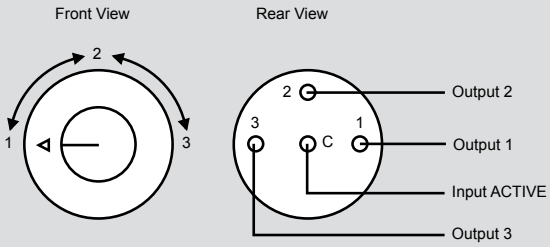

Select one of the following wiring options:

POSITION			WIRING
1	2	3	
ON	ON	ON	Connect All Terminals
ON	OFF	ON	Do Not Connect Terminal 2
OFF	ON	ON	Do Not Connect Terminal 1
ON	ON	OFF	Do Not Connect Terminal 3

Excel Life - illuminated LED ring kits and LED Power Supplied/Power available indicator kits

Cat No. EM770LED, EMPAPS2, EMPAPS1, EMPA, EMPS1, EMPS2, EM803LED

Installation EM770LED - LED 770 illumination kit

Wiring

LED Power Available/Power Supplied indicator kits EMPAPS2, EMPAPS1, EMPA, EMPS1, EMPS2, EM803LED

LED Power Available/Power Supplied indicator kits EMPAPS2, EMPAPS1, EMPA, EMPS1, EMPS2, EM803LED LED Power Available/Power Supplied indicator kits

Excel Life - shutter, blind, curtain control

Cat No. EC919, EC920

Wiring

Push-button switch (Cat No EC919)

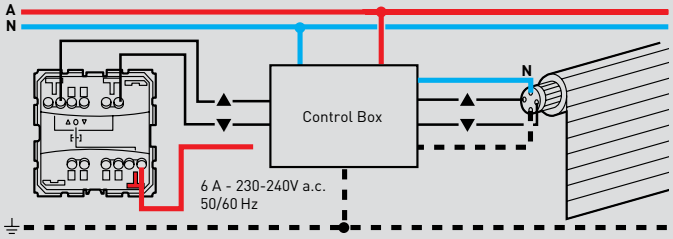

Push-button switch (Cat No EC920)

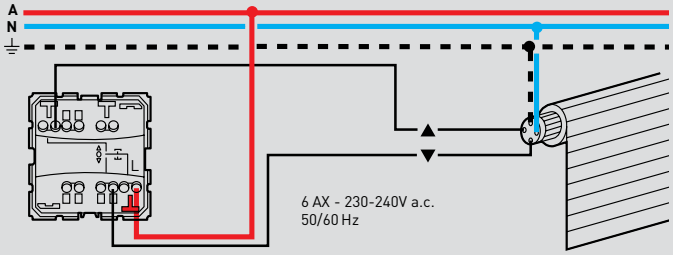

Excel Life - plates and cut-out dimensions

Dedicated plate series dimensions

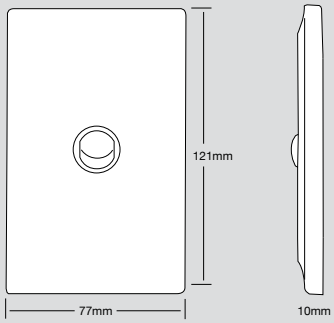

Maximum cut-out dimensions

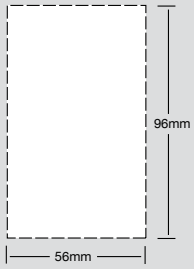

Common plate series dimensions

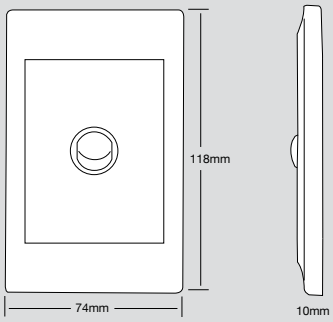

Maximum cut-out dimensions

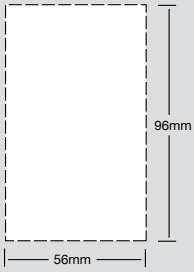

Excel Life - powerpoint installation details

Cat No. ED777, ED787

Hard Surfaces Installations

Double powerpoint 10A

Assembly

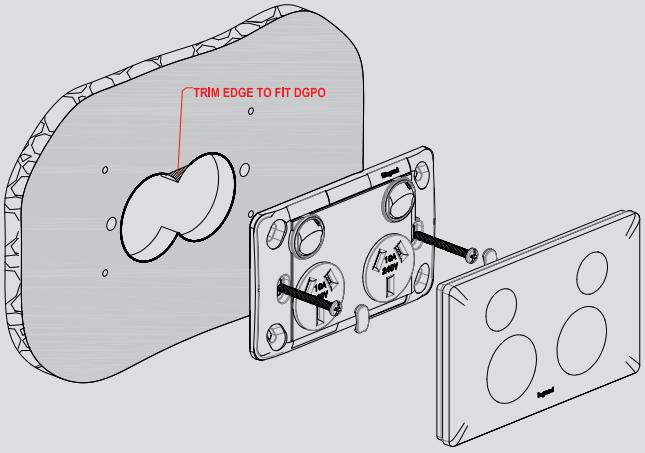

Cut-out dimensions

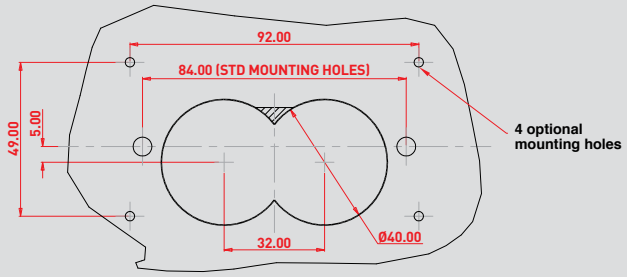

CUT-OUT for TIMBER (with Ø40 hole saw)

Product dimensions

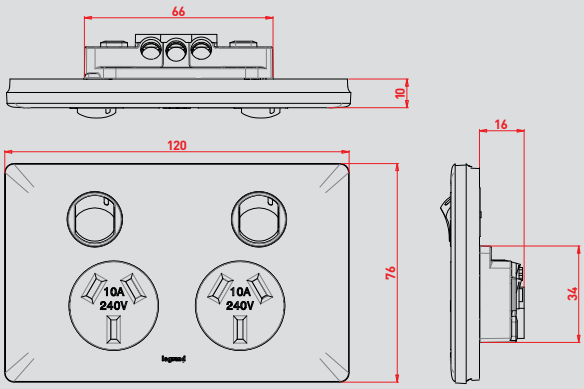

Single powerpoint 10A

Assembly

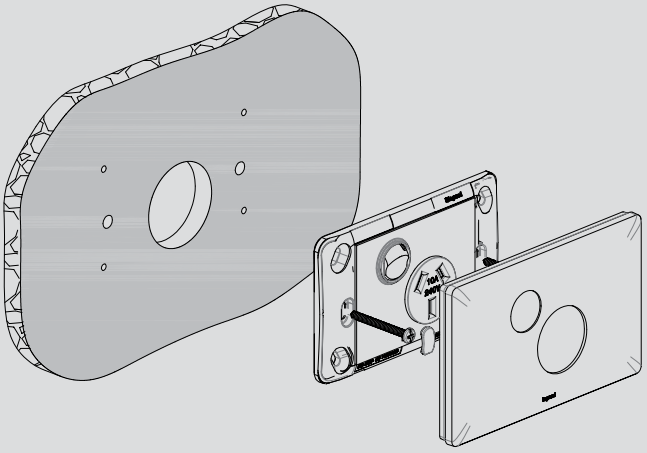

Cut-out dimensions

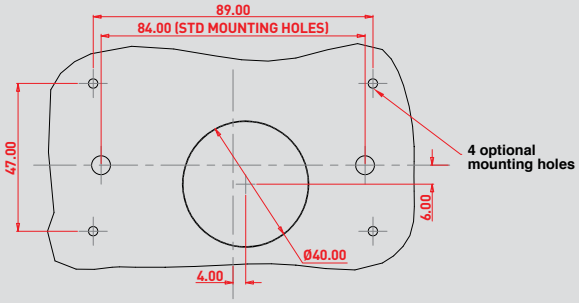

CUT-OUT for TIMBER (with Ø40 hole saw)

Product dimensions

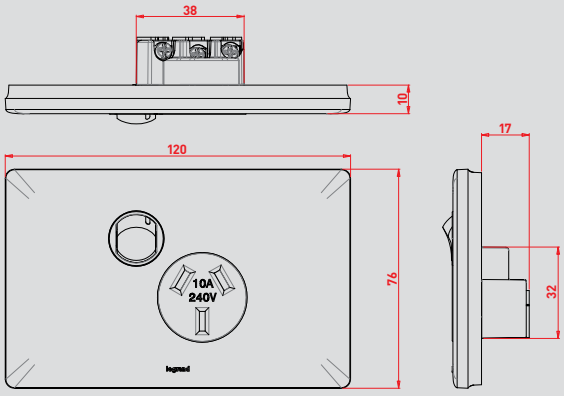

Note:
Cut-out dimensions for other devices are 96mm x 56mm

Excel Life - USB chargers installation details

Cat No. ED777USB2PSA, EMUSB2PSA, EMUSB2PSX

Installation in plasterboard – USB Powerpoint

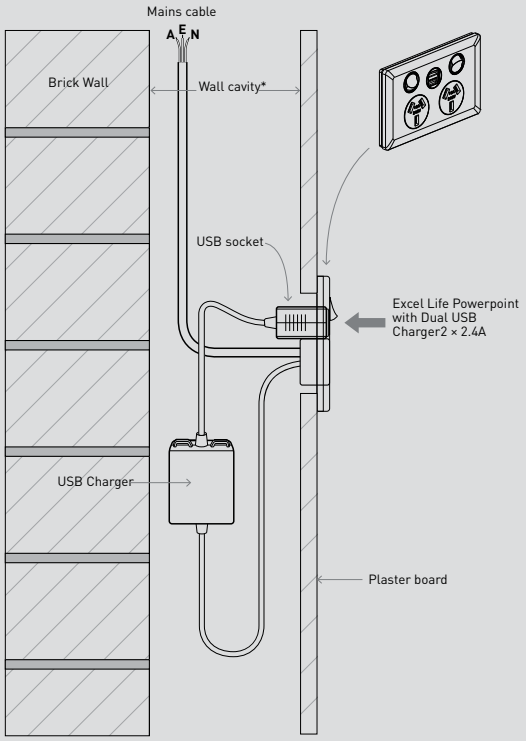

e.g. ED777USB2PSAWE

Installation in plasterboard – USB Charger

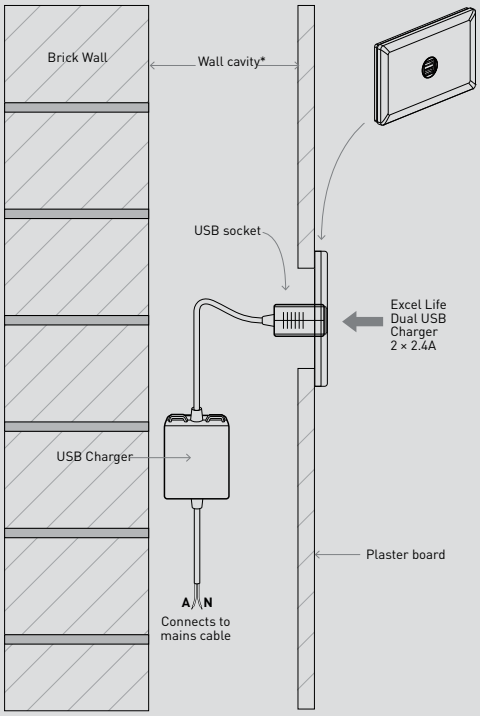

e.g. EMUSB2PSAWE + ED770/1GPLWE

Installation in plasterboard with wall boxes – USB Charger

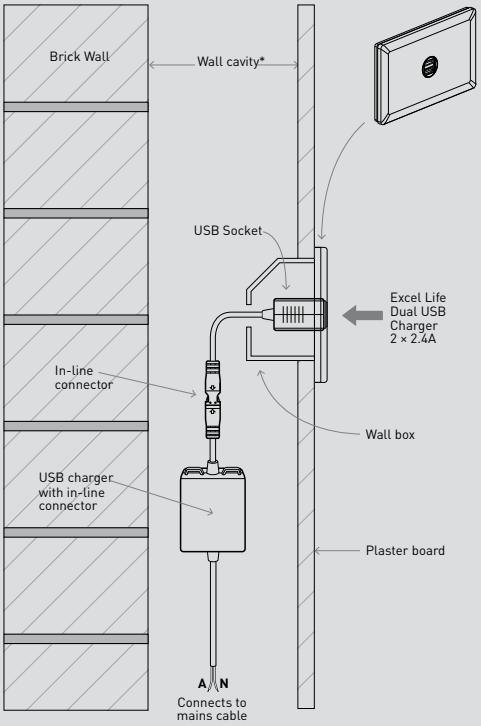

e.g. EMUSB2PSXWE + ED770/1GPLWE

* Minimum 50mm cavity required.

Installation in brick walls with wall boxes – USB Charger

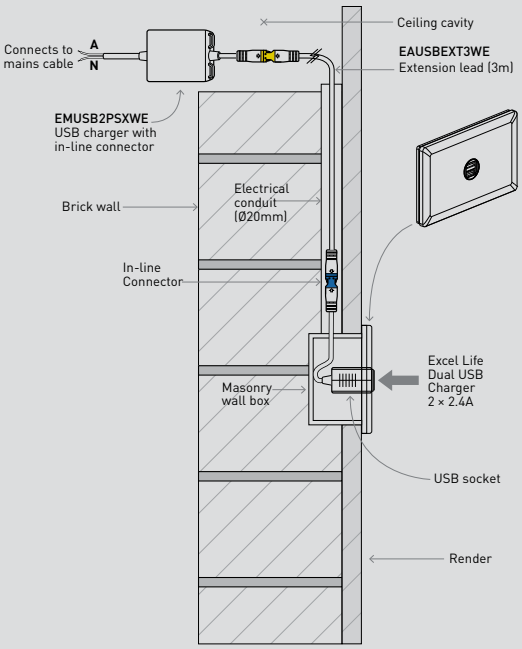

e.g. EMUSB2PSXWE + EAUSBEXT3WE + ED770/1GPLWE

Excel - dimmers

Cat No. XL250L, XL250T, XL400L, XL400T, XL700L, XL700T, XL1000L, XL1000T, XL1000ERC, XL2000ERC

Specification table

Cat No.	Type	Maximum load	Minimum load	Incandescent	240V linear halogen	GU10 240V halogen downlights	Low voltage halogen with wirewound (Iron Core) transformers*	Low voltage halogen with electronic transformers	Ceiling fan
XL250L	Leading edge	250VA	10VA	✓	✓	✓	✓	×	×
XL250T	Trailing edge	250VA	10VA	✓	✓	×	×	✓	×
XL400L	Leading edge	400VA	10VA	✓	✓	✓	✓	×	×
XL400T	Trailing edge	400VA	10VA	✓	✓	×	×	✓	×
XL700L	Leading edge	700VA	10VA	✓	✓	✓	✓	×	×
XL700T	Trailing edge	700VA	10VA	✓	✓	×	×	✓	×
XL1000L	Leading edge	1000VA	10VA	✓	✓	✓	✓	×	×
XL1000T	Trailing edge	1000VA	10VA	✓	✓	×	×	✓	×

Remote mounted dimmers

Cat No.	Type	Maximum load	Minimum load	Incandescent	240V linear halogen	GU10 240V halogen downlights	Low voltage halogen with wirewound (Iron Core) transformers*	Low voltage halogen with electronic transformers	Ceiling fan
XL1000ERC	Leading edge	1000VA	75VA	✓	✓	×	✓	See note	✓
XL2000ERC	Leading edge	2000VA	75VA	✓	✓	×	✓	See note	✓

Note

Some electronic transformers state that they are compatible with Leading Edge Dimmers. However, significant derating of the dimmer is usually required. Therefore, HPM recommends the use of Trailing Edge Dimmers (HPM Cat No. XL250T, XL400T, XL700T or XL1000T) for these applications. If it is necessary to use a Leading Edge Dimmer, then please refer to the Dimming Electronic Transformers information sheet enclosed with the product.

* When using wirewound transformers, ensure the transformers are marked “suitable for dimming” and derate the dimmer by 20%.

Excel - dimmers and fan controllers

Cat No. XL250L, XL250T, XL400L, XL400T, XL1000ERC, XL2000ERC, XL475/2, XL300F

Wiring diagrams

One-way switching with dimmer

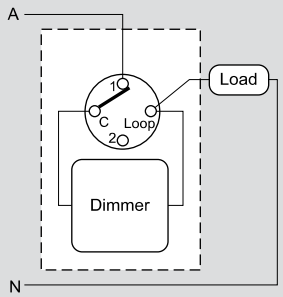

Two-way switching with dimmer

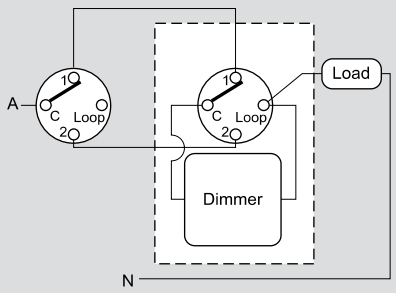

Cat Nos. XL1000ERC and XL2000ERC

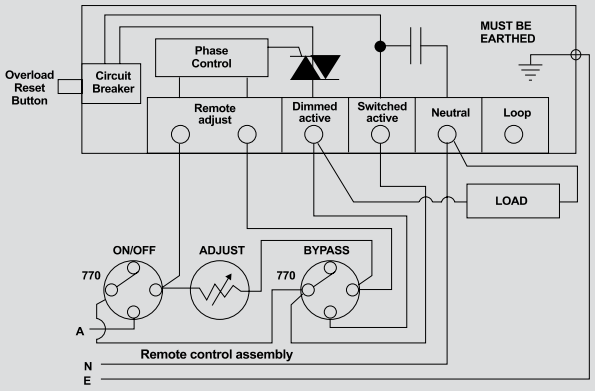

Dimensions

Cat No. XL475/2

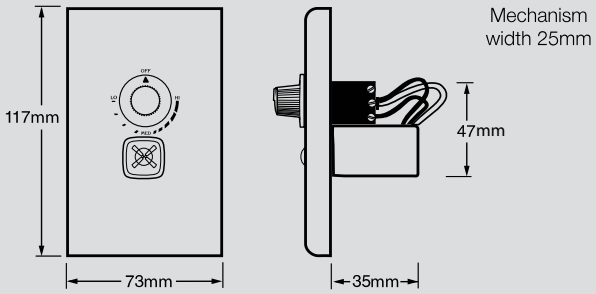

Cat No. XL300F

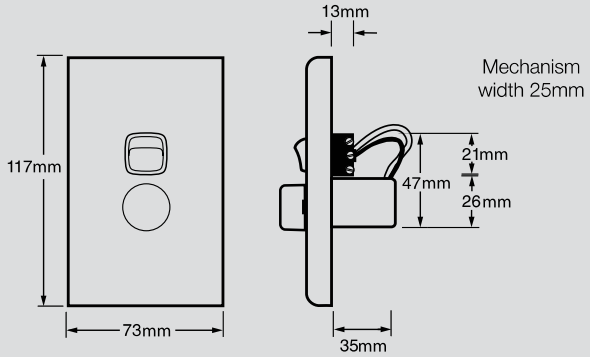

Cat Nos. XL250L, XL250T, XL400L, XL400T

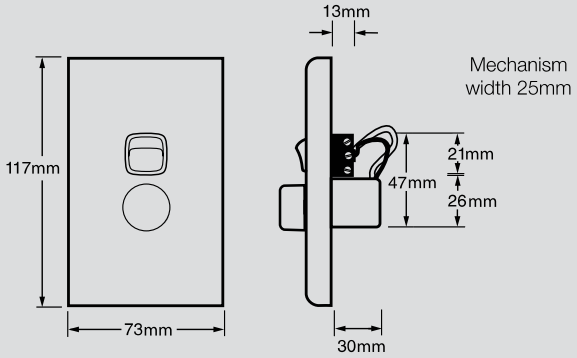

Excel - dimmers

Cat No. XL650ET, XL700L, XL700T, XL1000L, XL1000T, XL1000ERC, XL2000ERC

Dimensions

Cat No. XL650ET

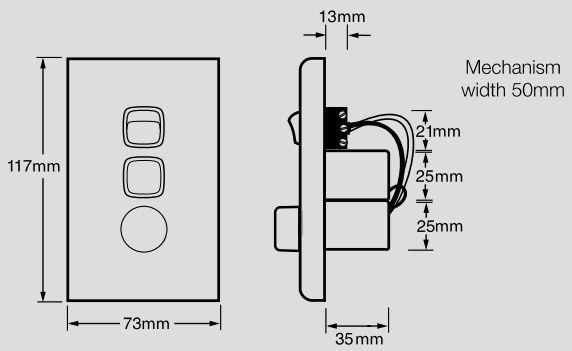

Cat Nos. XL700L, XL700T

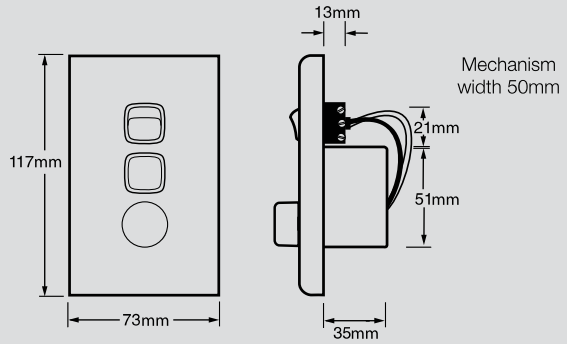

Cat Nos. XL1000L, XL1000T

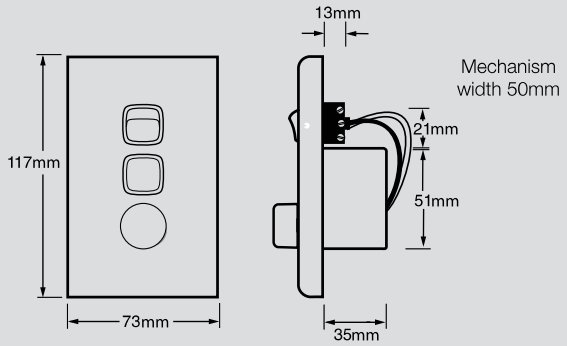

Cat Nos. XL1000ERC, XL2000ERC

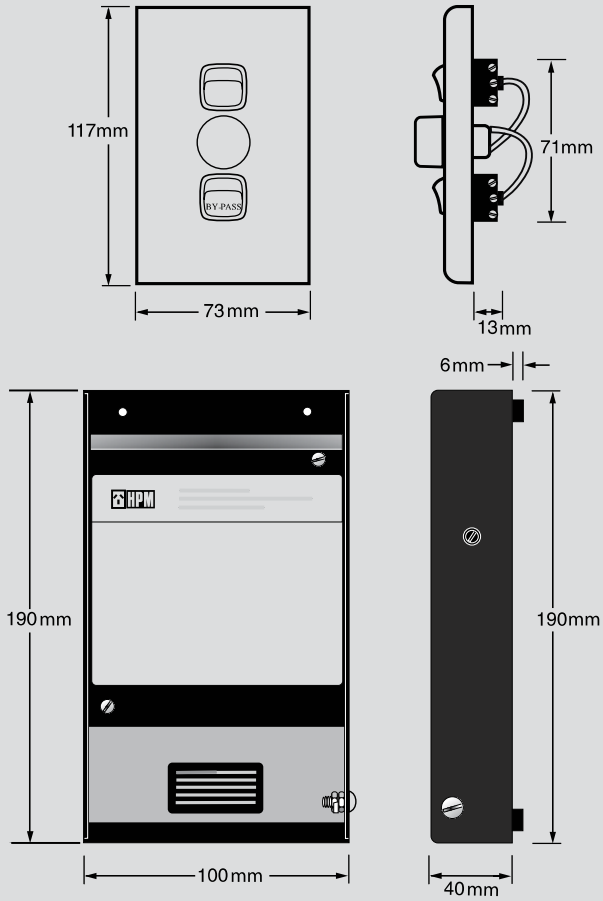

Excel - powerpoints with 84mm mounting centres

Cat No. XL787, XL787/20, XL787/25, XL787/32, XL787X, XL787/2X, XLV787, XLV787X, XLV787/2X, XL777, XL777X, XLV777

Dimensions

Cat No. XL787

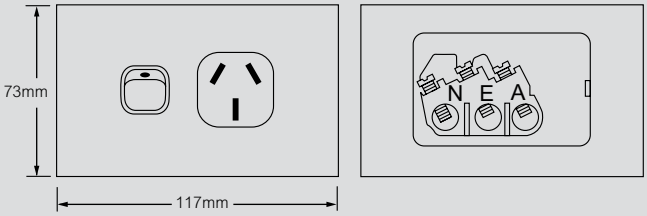

Cat No. XL787/20

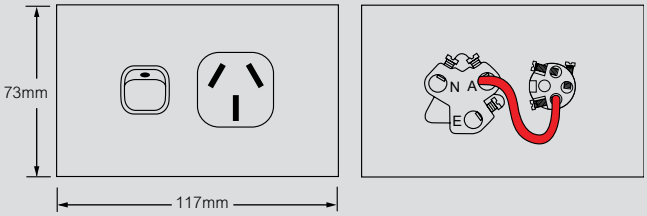

Cat No. XL787/25

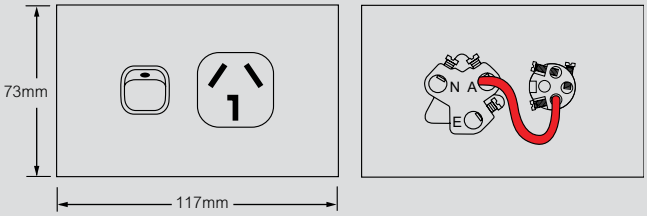

Cat No. XL787/32

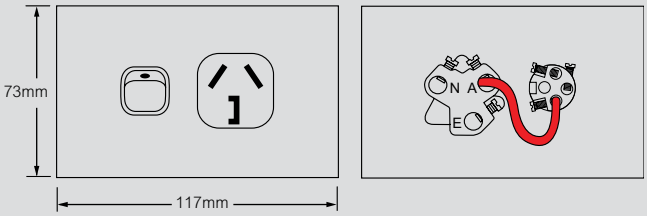

Cat No. XL787X

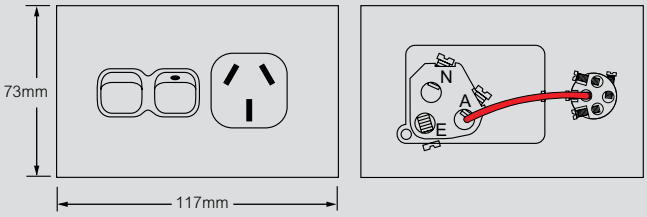

Cat No. XL787/2X

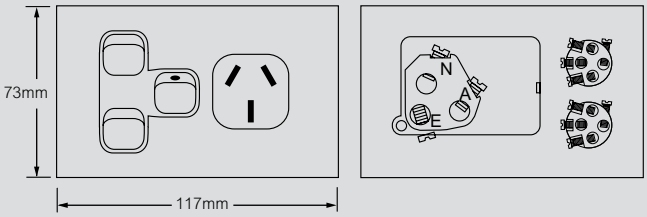

Cat No. XLV787

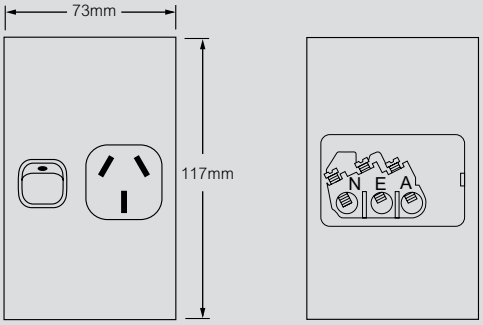

Cat No. XLV787X

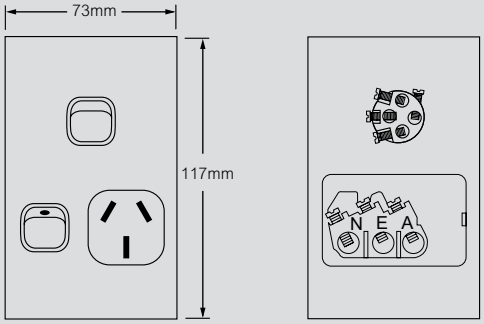

Cat No. XLV787/2X

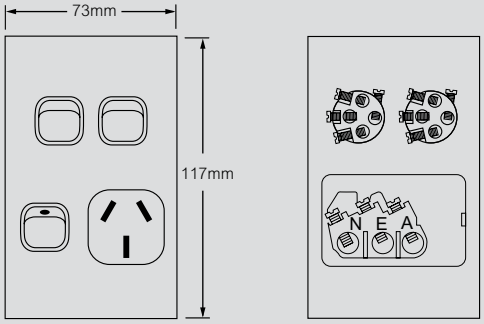

Cat No. XL777

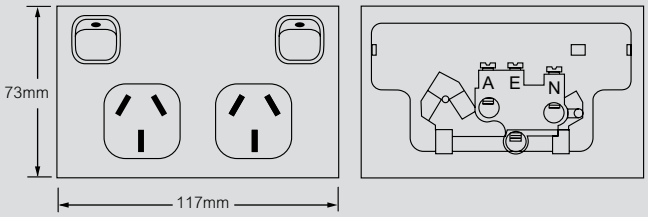

Cat No. XL777X

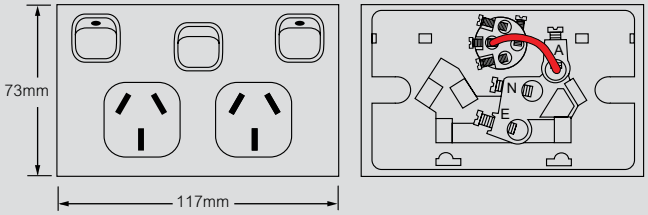

Cat No. XLV777

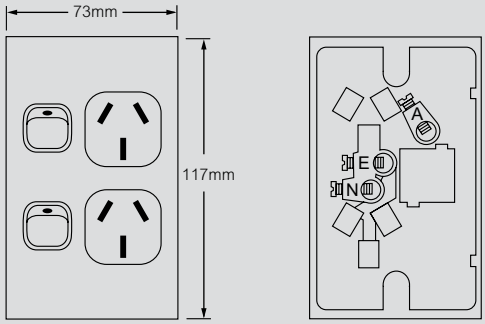

Excel - powerpoints with 84mm mounting centres

Cat No. XLV777X, XL777EL10, XL777EL30, XL787B, XL777PA

Dimensions

Cat No. XLV777X

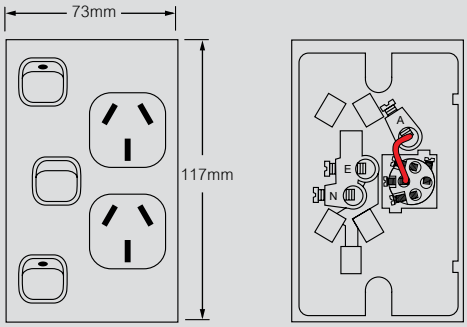

Cat No. XL777EL10

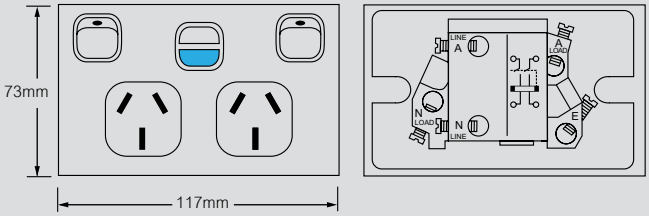

Cat No. XL777EL30

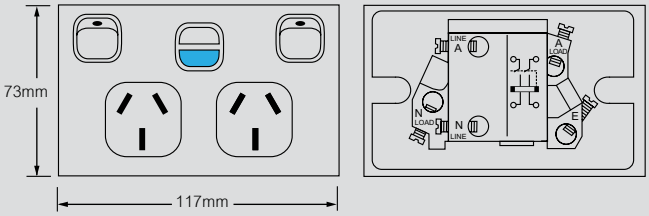

Cat No. XL787B

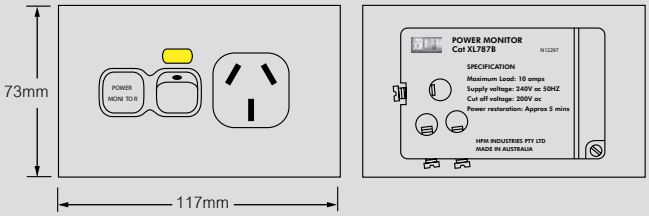

Cat No. XL777PA

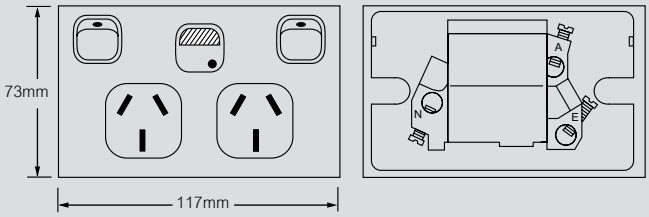

Excel - time-delay switches

Cat No. XLTD770/1, XLTX770/1, XLTX770/2, XLTX770/3, XLTX770/1A, XLTX770/2A, XLTX770/1NC, XLTX770/2NC, XLTF770/1

Specification table

Cat No.	Maximum load	Neutral required	Mode of operation	Normally open/ closed	Remote control	Timing range
XLTD770/1	600VA	No	Re-trigger	Normally open	Yes	1, 3 and 10 min
XLTX770/1	2400VA	Yes	Re-trigger	Normally open	Yes	1 sec - 239 hrs
XLTX770/2	2400VA	Yes	Toggle	Normally open	Yes	1 sec - 239 hrs
XLTX770/3	2400VA	Yes	Repeat cycle	Normally open	Yes	15 sec - 24 hrs cycle
XLTX770/1A	2400VA	No	Re-trigger	Normally open	Yes	1 sec - 239 hrs
XLTX770/2A	2400VA	No	Toggle	Normally open	Yes	1 sec - 239 hrs
XLTX770/1NC	2400VA	Yes	Re-trigger	Normally closed	Yes	1 sec - 239 hrs
XLTX770/2NC	2400VA	Yes	Toggle	Normally closed	Yes	1 sec - 239 hrs
XLTF770/1	2400VA (lamp) 600VA (fan)	No	Fan delay	Normally open	No	3, 10 and 20 min

- Retrigger means that a button press during the timing cycle will restart the timing cycle.
- Toggle means that a button press during the timing cycle will stop the timing cycle.
- Fan delay means that the fan remains on for a certain period after the light is turned off. A light must be connected for the unit to operate.

Information

Some HPM time-delay switches may have compatibility issues with some types of compact fluorescent lamp or electronic ballast when the load is small. This may cause the lamp to flicker slightly in the off state. It can be overcome by increasing the size of the load, or by connecting a resistive load in parallel. For more information, please contact Legrand Australia Technical Support on 1300 369 777

Wiring diagrams

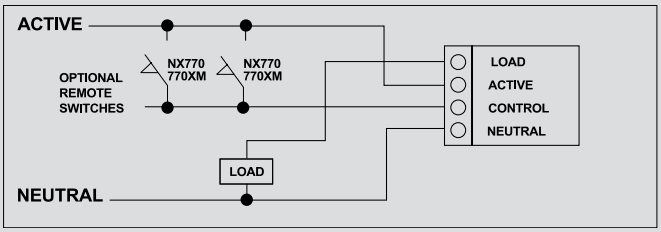

Example application with remote switches.

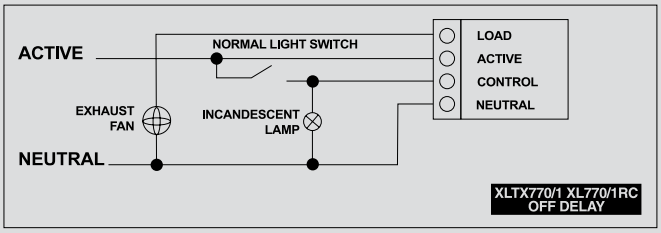

A fan runs for a certain period after light switch is turned off.

Excel - powerpoint with surge diverters

Cat No. XL777PA

Surge diverters

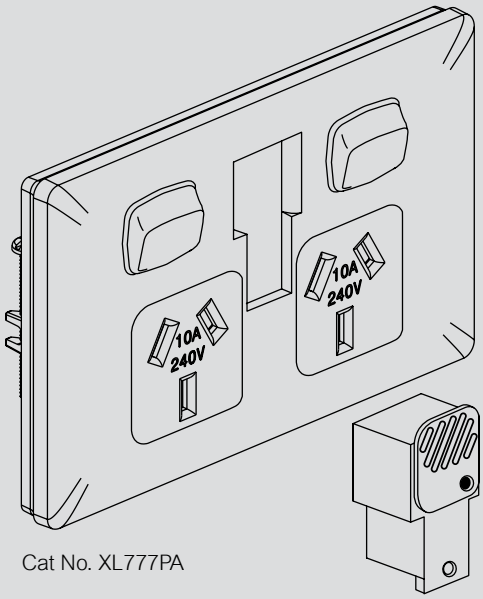

Cat No. XL777PA

Cat No. XL777PAM
Replacement module

Connection diagrams

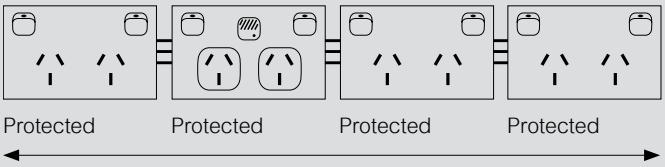

Upstream voltage across active to neutral will be slightly above clamp voltage due to upstream circuit impedance.

Specification Cat No. XL777PA

Normal Operating Data	
System Voltage (U_n ~ RMS)	220-250V a.c.
Power Dissipation	0.6W
Varistor Volts V a.c. ~ RMS at 1mA	450V a.c.

Transient Data	
Surge	**Let through Maximum**
200A Peak 8/20µSec	800V a.c. peak
4500A* Peak 8/20µSec	1300V a.c. peak
Long wave current 1m/Sec	75J
2.5kV Peak 1.2/50µS	850V a.c. peak
6kV Peak 0.5/µSec/100KHz	1200V a.c. peak
200A Peak 0.5/µSec/100KHz	900V a.c. peak

* Internal fuse operates above this value.

Module schematic diagram

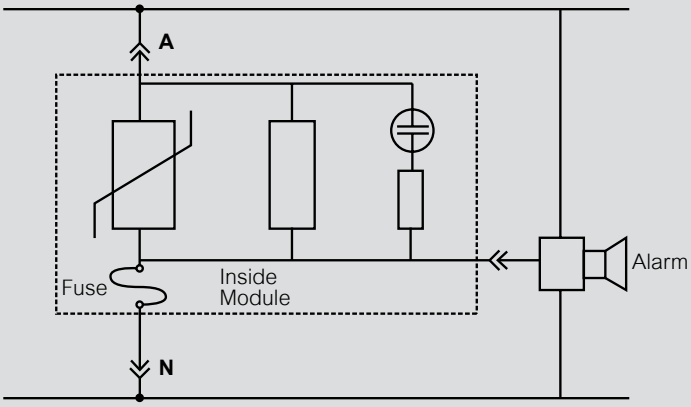

Terminal layout

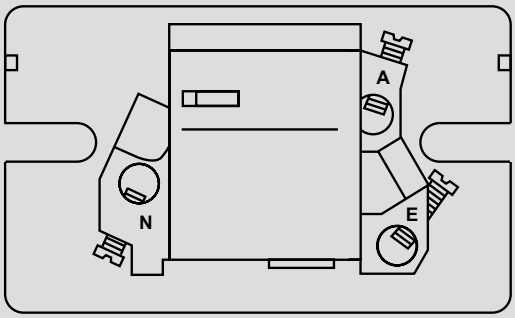

Standard - time-delay switches

Cat No. TX770/1RC, TX770/2RC, TF770/1RC

Specification table

Cat No.	Maximum load	Neutral required	Mode of operation	Normally open/ closed	Remote control	Timing range
TX770/1RC	2400VA	Yes	Retrigger	Normally open	Yes	1 sec - 239 hrs
TX770/2RC	2400VA	Yes	Toggle	Normally open	Yes	1 sec - 239 hrs
TF770/1RC	2400VA (lamp) 600VA (fan)	No	Fan delay	Normally open	Yes	3, 10 and 20 min

- Retrigger means that a button press during the timing cycle will restart the timing cycle.
- Toggle means that a button press during the timing cycle will stop the timing cycle.
- Fan delay means that the fan remains on for a certain period after the light is turned off. A light must be connected for the unit to operate.

Information

Some HPM time-delay switches may have compatibility issues with some types of compact fluorescent lamp or electronic ballast when the load is small. This may cause the lamp to flicker slightly in the off state. It can be overcome by increasing the size of the load, or by connecting a resistive load in parallel. For more information, please contact Legrand Australia Technical Support on 1300 369 777

Wiring diagrams

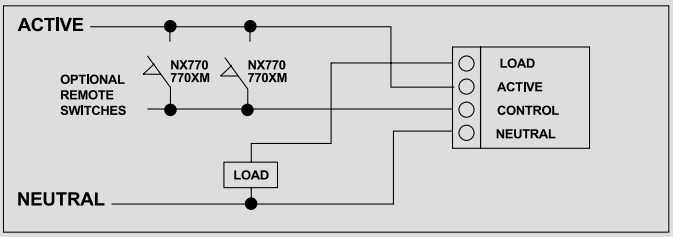

Example application with remote switches.

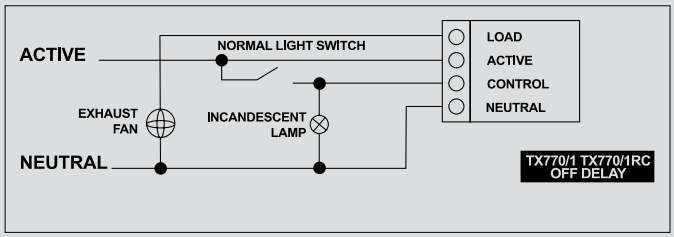

A fan runs for a certain period after light switch is turned off.

Standard - heavy-duty switch and powerpoints with 84mm mounting centres

Cat No. F1036P, 787, 787/20, 787/25, 787/32, 787X, 787/2X, 787P, V787, 738KL, 787XNV, 777, 777X

Mounting centres: 84mm

Cat No. F1036P

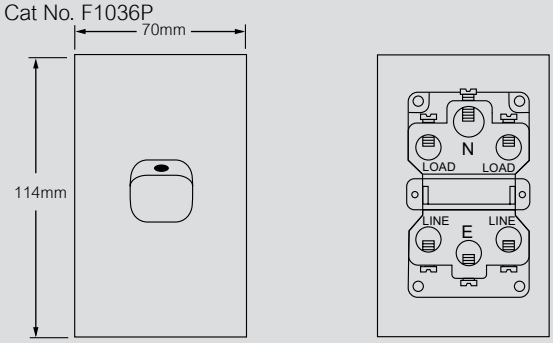

Cat No. 787

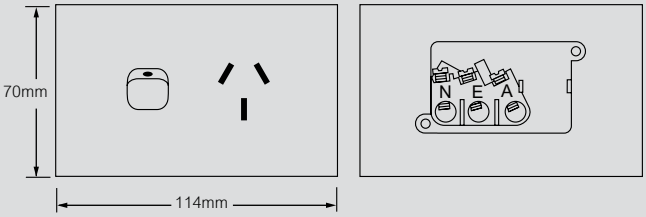

Cat No. 787/20

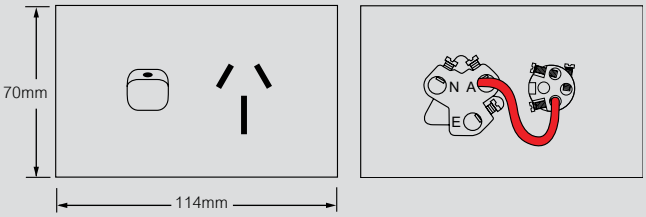

Cat No. 787/25

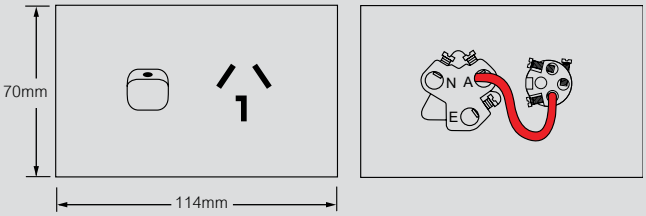

Cat No. 787/32

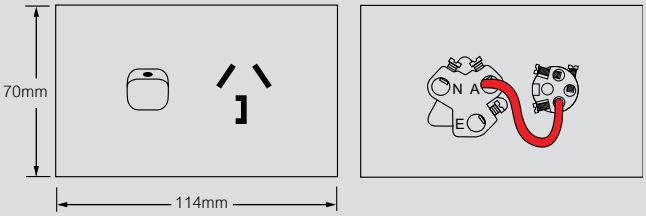

Cat No. 787X

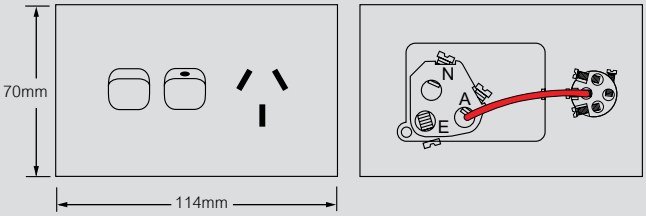

Cat No. 787/2X

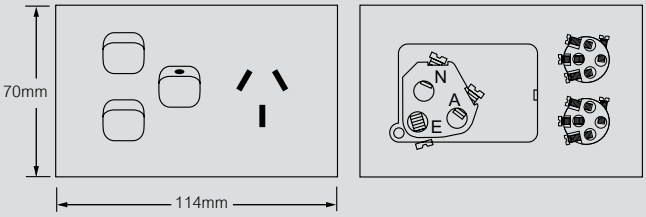

Cat No. 787P

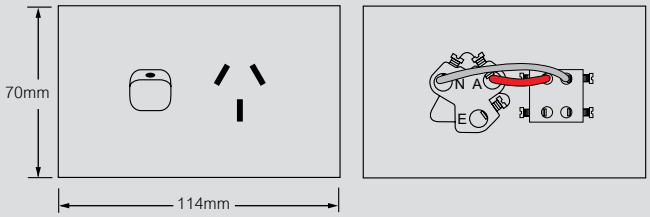

Cat No. V787

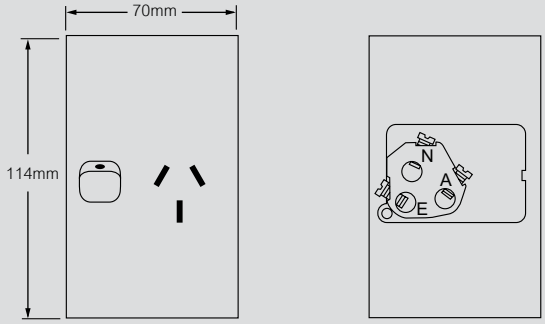

Cat No. 738KL

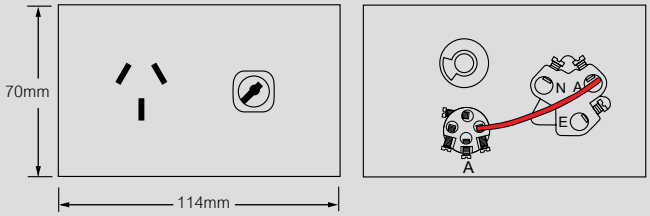

Cat No. 787XNV

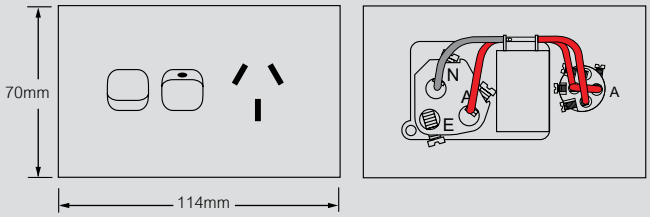

Cat No. 777

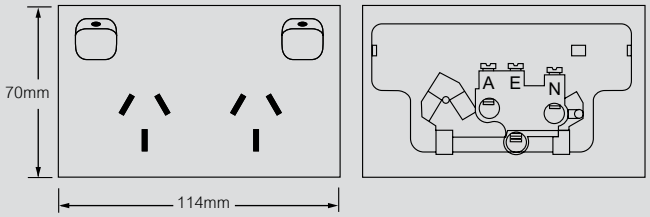

Cat No. 777X

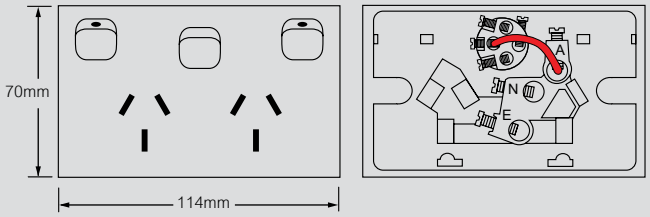

Standard - dimmers

Cat No. 250L, 250T, 400L, 400T, 700L, 700T, 1000L, 1000T

Specification table

Cat No.	Type	Maximum load	Minimum load	Incandescent	240V linear halogen	GU10 240V halogen downlights	Low voltage halogen with wirewound (Iron Core) transformers*	Low voltage halogen with electronic transformers	Ceiling fan
250L	Leading edge	250VA	10VA	✓	✓	✓	✓	×	×
250T	Trailing edge	250VA	10VA	✓	✓	×	×	✓	×
400L	Leading edge	400VA	10VA	✓	✓	✓	✓	×	×
400T	Trailing edge	400VA	10VA	✓	✓	×	×	✓	×
700L	Leading edge	700VA	10VA	✓	✓	✓	✓	×	×
700T	Trailing edge	700VA	10VA	✓	✓	×	×	✓	×
1000L	Leading edge	1000VA	10VA	✓	✓	✓	✓	×	×
1000T	Trailing edge	1000VA	10VA	✓	✓	×	×	✓	×

Note

Some electronic transformers state that they are compatible with Leading Edge Dimmers. However, significant derating of the dimmer is usually required. Therefore, HPM recommends the use of Trailing Edge Dimmers (HPM Cat No. 400T, 700T or 1000T) for these applications. If it is necessary to use a Leading Edge Dimmer, then please refer to the Dimming Electronic Transformers information sheet enclosed with the product.

* When using wirewound transformers, ensure the transformers are marked “suitable for dimming” and derate the dimmer by 20%.

Standard - dimmers

Cat No. 250L, 250T, 400L, 400T, 700L, 700T, 1000L, 1000T, 2000E, 2400E, 475/2

Wiring diagrams

One-way switching with dimmer

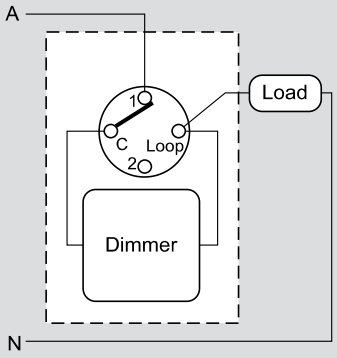

Two-way switching with dimmer

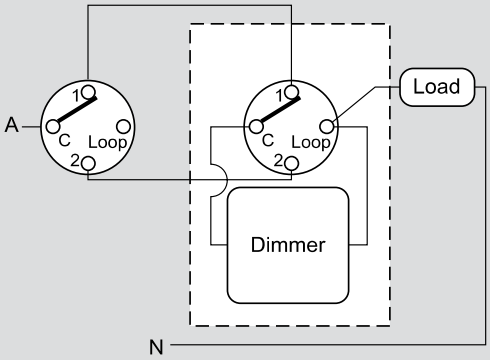

Cat Nos. 2000E and 2400E

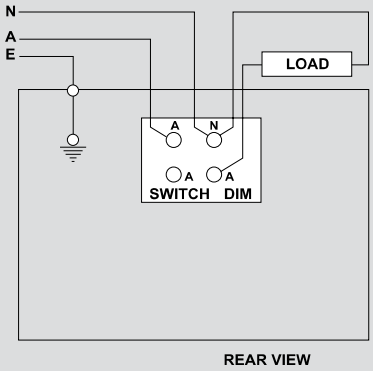

Cat No 475/2

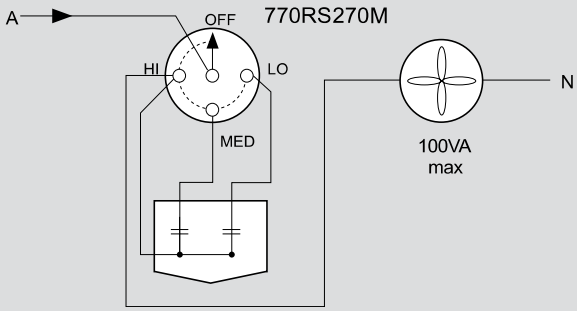

Standard - dimmers and fan controllers

Cat No. 300F, 250L, 250T, 400L, 400T, 700L, 700T, 650ET, 650ET1, 1000L, 1000T, 2000E, 2400E

Dimensions

Cat No. 300F

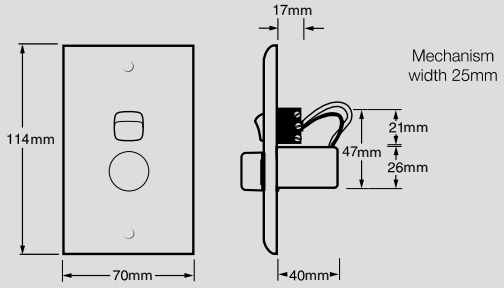

Cat Nos. 650ET, 650ET1

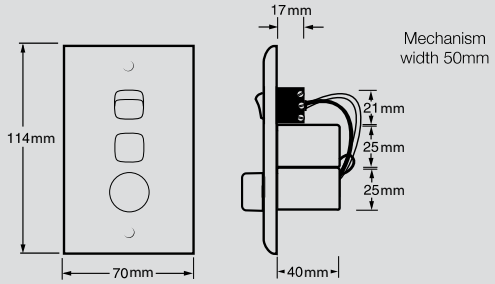

Cat Nos. 250L, 250T, 400L, 400T

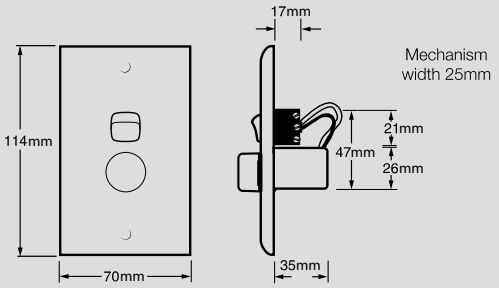

Cat Nos. 1000L, 1000T

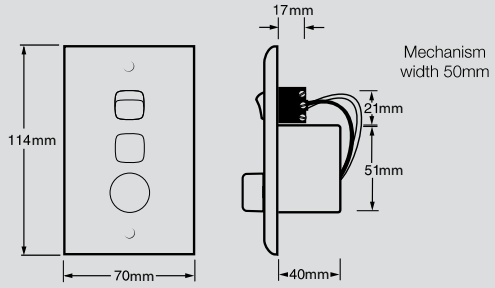

Cat Nos. 700L, 700T

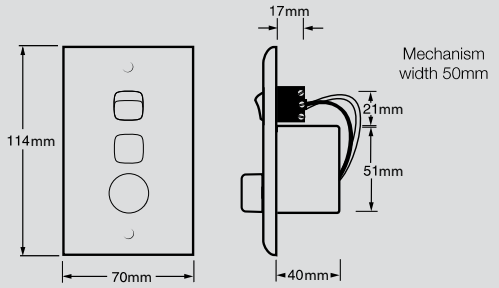

Cat Nos. 2000E, 2400E

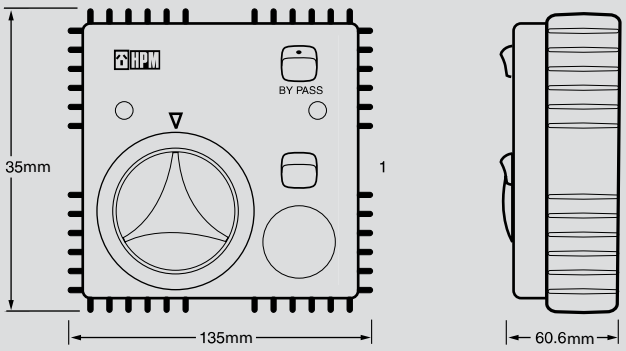

Standard - powerpoints with 84mm and 137mm mounting centres

Cat No. 777PLK, V777, V777LK, V777X, 790, 792, 792B, SQ787, SQ777, SQ777X

Mounting centres: 84mm

Cat No. 777PLK

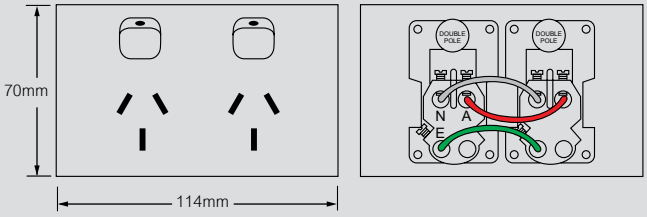

Cat No. V777

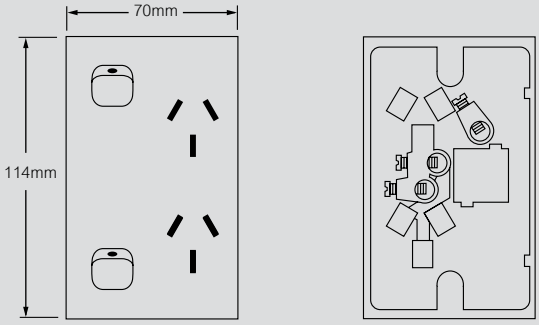

Cat No. V777LK

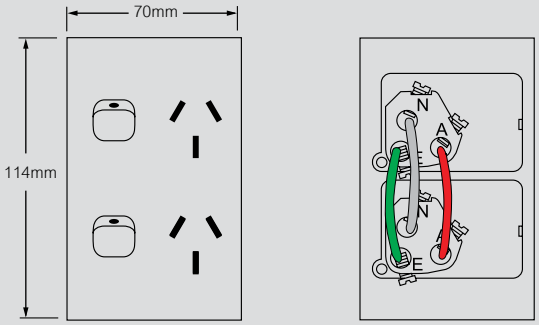

Cat No. V777X

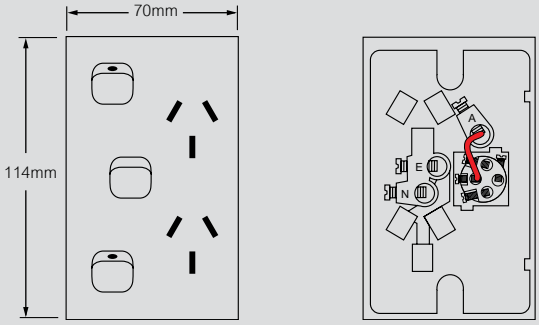

Cat No. 790

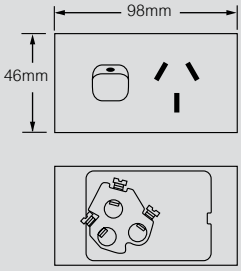

Mounting centres: 137mm

Cat No. 792

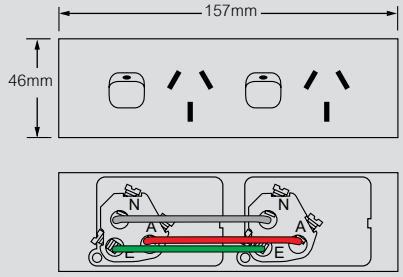

Cat No. 792B

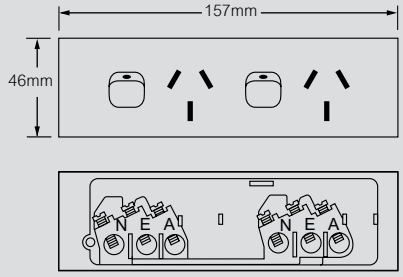

Mounting centres:

4 holes at 46mm horizontal and 84mm vertical
2 holes at 84mm horizontal on centre line

Cat No. SQ787

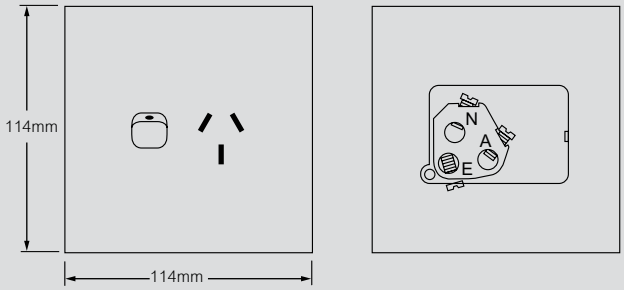

Cat No. SQ777

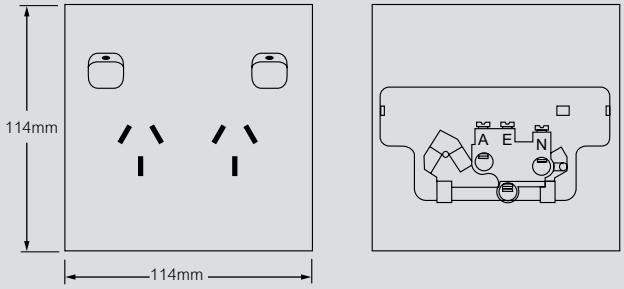

Cat No. SQ777X

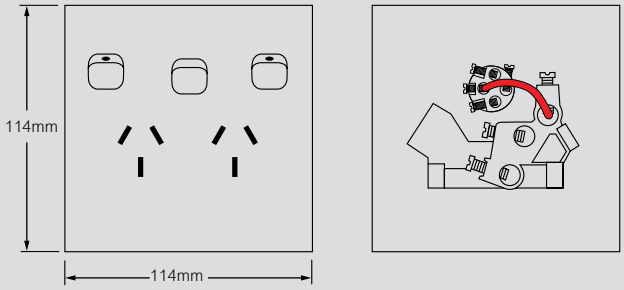

Standard - electresafe safety switches

Cat No. 777EL

Wiring example

Cat No. 777EL

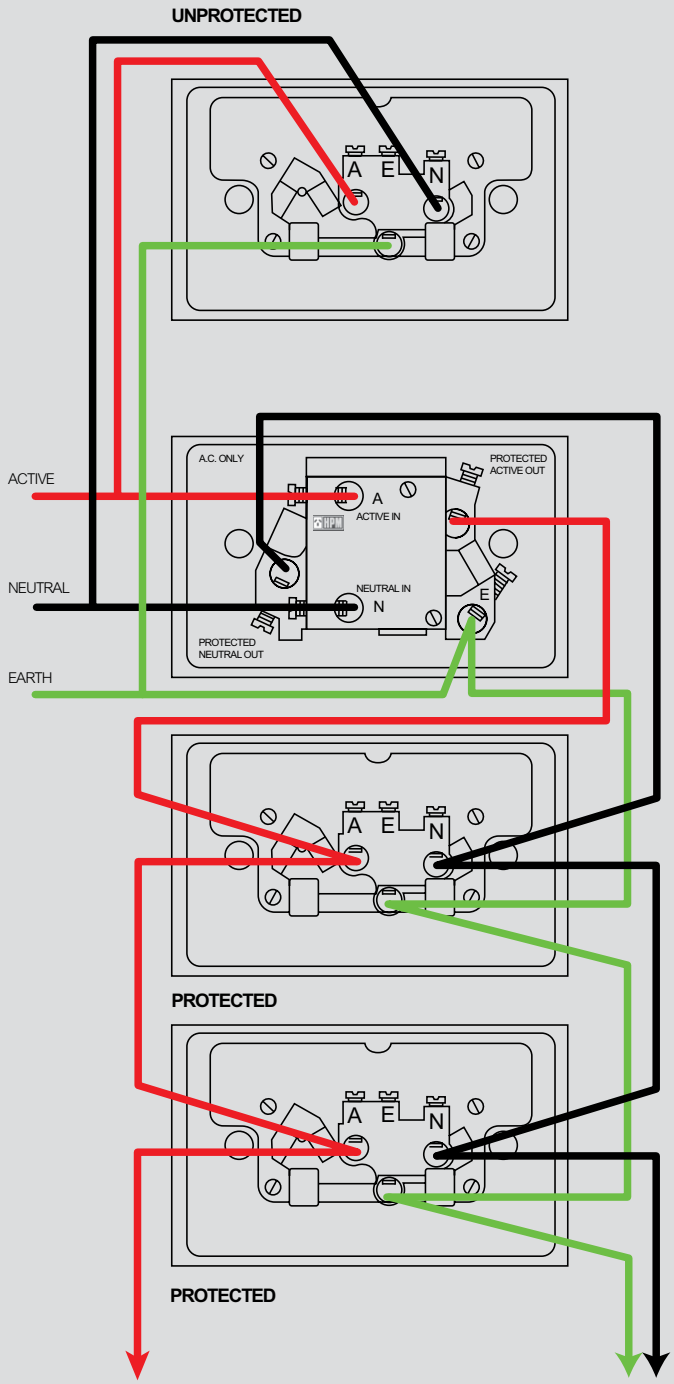

Note

Do not backfeed onto load terminals (local RCD Protection is lost).
Do not reverse line and load neutral (trips on load current, no trip on neutral to earth fault and false RCD tester values).
TEST earth resistance, meggerinsulation (including N-E). Tong test appliances on load. Test RCD and all downstream powerpoints.

EXCEL life
SUPER JOB
SUPER FAST

USB charging solutions for every type of job

EXCEL LIFE DOUBLE POWERPOINT WITH
DUAL USB CHARGER WITH EXTERNAL DRIVER

NEW

TYPE A/ TYPE C

TYPE A

Ideal for plaster board installations

ED777USB2PSA

NEW EXCEL LIFE DOUBLE POWERPOINT WITH
DUAL USB CHARGER WITH **INTEGRATED** DRIVER

NEW

Ideal for brick wall installation

ED777USB2IWE

The traditional Excel Life double powerpoint with dual USB charger with external driver delivers 2.4A per port. With a total charging capacity of 4.8A, the end-user can simultaneously charge 2 tablets at their maximum charging speed. This solution is great for installations in new buildings with plasterboard or double brick wall where there is a cavity to accommodate the external driver.

Our brand NEW Excel Life double powerpoint with dual USB charger with integrated driver delivers a total charging capacity of 2.4A shared between the 2 ports. Featuring a compact size integrated driver, this solution is perfect for fit-off in brick wall buildings or in any installation requiring a wall box.

Now you can install a USB powerpoint whether it is a new or retrofit project.

Visit www.excellife.com.au today

legrand®

GENERAL WIRING ACCESSORIES & MOBILE PRODUCTS

Brackets

P. 264 Mounting Brackets

Junction & Wall Boxes

P. 265 Wall Boxes

Mounting Blocks

P. 266 Deep Mounting Blocks

Other Accessories

P. 269 Cable Clips

Plug Tops & Base

P. 271 Plug Tops

Mobile Products

P. 273 Powerboards

FEATURED PRODUCTS

Acoustic and Fire Rated Wall Box
(p. 265)

USB Chargers
(p. 278)

P. 264
Mounting Clips

P. 265
Shrouds

P. 268
Junction Boxes

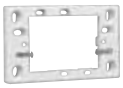
P. 267
13mm
Mounting Blocks

P. 268
Weatherproof
Mounting Blocks

P. 270
Insulated &
Earth Connectors

P. 270
Identification
Products

P. 271
Plug Bases

P. 272
Safety Plugs

P. 275
Extension Leads

P. 277
Cable Reels

P. 278
USB Chargers

P. 278
Plug-in Timers -
Double Pole

P. 279
Adaptors

TV/AV
Powerboards
(p. 273)

Double Adaptor
with Surge
Protection
Twin Packs
(p. 279)

Accessories

Installation accessories

143

143/2

954R

711

712

Cat.Nos	Brackets	UoM	Trade price $	GST $	Box qty	Carton qty
	Mounting brackets					
143	Mounting bracket standard size metal	EA	$2.23	$0.22	20	200
143/2	Mounting bracket horizontal stud mount with nails metal	EA	$2.38	$0.24	20	120
143/2V	Mounting bracket vertical stud mount with nails metal	EA	$2.38	$0.24	20	120
	Render bracket					
954	Render bracket for grids 84mm m. centres metal	EA	$5.23	$0.52	20	120
954R	Render bracket recessed mount for grids 84mm m. centres metal	EA	$8.84	$0.88	20	120
	Triple size mounting brackets					
243	Mounting bracket triple size 152mm m. centres for 788 3 gang series	EA	$9.42	$0.94	20	120
	Round brackets					
143U	Mounting bracket stud mount universal with captive nail metal	EA	$2.23	$0.22	10	120
	Clips					
	Mounting clips for plasterboard					
711	Mounting clips for 6.4mm plasterboard 50x76mm max cut-out	EA	$2.07	$0.21	50	600
712	Mounting clips for 10mm plasterboard 50x76mm max cut-out	EA	$1.84	$0.18	50	600
716	Mounting clips for 6.4mm plasterboard 30x40mm max cut-out	EA	$7.05	$0.70	20	240
	Mounting clips for Architectural MS series					
719/1	Mounting bracket small size	EA	$8.48	$0.85	-	-
717/1	Mounting bracket large size	EA	$9.30	$0.93	-	200
718/8	Plaster gauge 8mm deep suits 429 & 954 boxes	EA	$9.46	$0.95	20	120
718/13	Plaster gauge reusable 13mm deep suits 429 & 953 boxes	EA	$9.46	$0.95	20	240
719	Flush mount assembly to suit plasterboard/wallboard	EA	$26.65	$2.66	10	-

N New product | ECO Energy Saving products | More info available. See technical pages | COMING SOON Coming soon | Product to be discontinued

Whilst most items are stock lines some products are made to order. UoM = Unit Of Measure.
Prices are effective 1 June 2017 and are subject to change without notice. Trade prices exclude GST.

Accessories

Installation accessories

429R

425S2

435

74703WE

74703BL

Cat.Nos	Wall boxes	UoM	Trade price $	GST $	Box qty	Carton qty
	Standard wall boxes					
429R	Wall box with sliding nuts, retent. clips & cover 97x60x45mm black	EA	$14.57	$1.46	10	140
	Double size wall boxes					
429/2	Wall box double size 84mm m. centres segregated 2 gang 97x60x45mm black	EA	$33.10	$3.31	4	56
	Triple size wall boxes					
326	Wall box triple size 152mm m. centres 165x70x45mm metal	EA	$50.97	$5.10	-	10
	Wall boxes - Fire -/120/120 and acoustic rated - for 5-30mm plasterboard					
435	Wall box 99x57x48mm metal black	EA	$41.06	$4.11	-	60
435/2	Wall box with intumescent bridge for multi-gang 99x57x48mm plastic black	EA	$48.64	$4.86	-	60
	Plastic Shrouds					
749	Shroud for 770 series round mech. 45mm long with 13mm^2 cable entry	EA	$2.67	$0.27	10	-
749S	Shroud for 770 series round mechanism	EA	$4.93	$0.49	-	-
751	Shroud for openings 53x73x51mm	EA	$6.69	$0.67	20	320
74703WE	Shroud for Multi & Esco 0.76mm thick panels white	EA	$3.83	$0.38	10	-
74703BL	Shroud for Multi & Esco 0.76mm thick panels black	EA	$3.83	$0.38	10	-
74704WE	Shroud for Multi & Esco 1mm thick panels white	EA	$3.83	$0.38	10	-
74704BL	Shroud for Multi & Esco 1mm thick panels black	EA	$3.83	$0.38	10	-
74705WE	Shroud for Multi & Esco 1.3mm thick panels white	EA	$3.83	$0.38	10	-
74705BL	Shroud for Multi & Esco 1.3mm thick panels black	EA	$3.83	$0.38	10	-
74706WE	Shroud for Multi & Esco 1.5mm thick panels white	EA	$3.83	$0.38	10	-
74706BL	Shroud for Multi & Esco 1.5mm thick panels black	EA	$3.83	$0.38	10	-

N New product | ECO Energy Saving products | More info available. See technical pages | COMING SOON Coming soon | Product to be discontinued

Whilst most items are stock lines some products are made to order. UoM = Unit Of Measure.
Prices are effective 1 June 2017 and are subject to change without notice. Trade prices exclude GST.

Accessories

Installation accessories

140WE

EA140UG

150WE

Cat.Nos	Mounting blocks for Excel and Excel Life ranges	UoM	Trade price $	GST $	Box qty	Carton qty
	Deep surface mounting blocks					
140WE	Mounting block 37mm deep for switches & GPOs white	EA	$4.37	$0.44	10	180
EA140UG	Mounting block 37mm deep for switches & GPOs urban grey	EA	$7.49	$0.75	10	180
140BL	Mounting block 37mm deep for switches & GPOs black	EA	$4.95	$0.50	10	180
140CR	Mounting block 37mm deep for switches & GPOs cream	EA	$4.95	$0.50	10	180
	Double & triple mounting blocks for Standard range					
139WE	Mounting block for 3 gang GPOs or 798 shaver outlets 92x191x29mm white	EA	$24.15	$2.42	5	-
139BR	Mounting block for 3 gang GPOs or 798 shaver outlets 92x191x29mm brown	EA	$24.15	$2.42	5	-
139BWE	Spacer plate for 139 mounting blocks 92x191x29mm white	EA	$10.98	$1.10	5	-
148WE	Mounting block for 2x standard size plates 70x114x84mm white	EA	$21.20	$2.12	5	-
	Surface mounting blocks for narrow plates					
150WE	Mounting block for narrow plates 78mm m. centres 52x150x24mm white	EA	$11.11	$1.11	10	-
150BL	Mounting block for narrow plates 78mm m. centres 52x150x24mm black	EA	$11.11	$1.11	10	-
150CR	Mounting block for narrow plates 78mm m. centres 52x150x24mm cream	EA	$11.11	$1.11	10	-
192WE	Mounting block for narrow plates 792 & 792B series 52x162x24mm white	EA	$9.86	$0.99	5	-
192BL	Mounting block for narrow plates 792 & 792B series 52x162x24mm black	EA	$9.86	$0.99	5	-
	Square plate mounting block					
149WE	Mounting block for square plates 122x122x38mm white	EA	$23.88	$2.39	5	90
149BL	Mounting block for square plates 122x122x38mm black	EA	$23.88	$2.39	5	90
149CR	Mounting block for square plates 122x122x38mm cream	EA	$23.88	$2.39	5	90

Accessories

Installation accessories

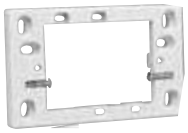

137WE

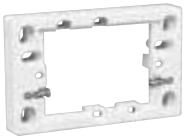

137DWE

137/1WE

137H3WE

Cat.Nos	Mounting blocks	UoM	Trade price $	GST $	Box qty	Carton qty
	Surface mounting blocks and spacers					
137WE	Mounting block for GPOs 84mm m. centres 13mm deep white	EA	$6.17	$0.62	10	350
137BL	Mounting block for GPOs 84mm m. centres 13mm deep black	EA	$6.52	$0.65	10	350
137CR	Mounting block for GPOs 84mm m. centres 13mm deep cream	EA	$6.52	$0.65	10	350
137DWE	Mounting block for GPOs 84mm m. centres 18mm deep white	EA	$5.53	$0.55	10	270
137DBL	Mounting block for GPOs 84mm m. centres 18mm deep black	EA	$5.84	$0.58	10	270
137DCR	Mounting block for GPOs 84mm m. centres 18mm deep cream	EA	$5.84	$0.58	10	270
138WE	Spacer for 140 series double insulated rear base 80.5x125x8.5mm white	EA	$6.33	$0.63	10	200
138BL	Spacer for 140 series double insulated rear base 80.5x125x8.5mm black	EA	$6.33	$0.63	10	200
137H3WE	Mounting block horizontal mount for columns Ø300mm white	EA	$12.16	$1.22	10	-
137H4WE	Mounting block horizontal mount for columns Ø400mm white	EA	$12.16	$1.22	10	-
137H5WE	Mounting block horizontal mount for columns Ø500mm white	EA	$12.16	$1.22	10	-
137H6WE	Mounting block horizontal mount for columns Ø600mm white	EA	$12.16	$1.22	10	-
137H8WE	Mounting block horizontal mount for columns Ø800mm white	EA	$12.16	$1.22	10	-
137HS3WE	Spacer horizontal mount for columns Ø300mm white	EA	$12.01	$1.20	10	-
137HS4WE	Spacer horizontal mount for columns Ø400mm white	EA	$12.01	$1.20	10	-
137HS5WE	Spacer horizontal mount for columns Ø500mm white	EA	$12.01	$1.20	10	-
137HS6WE	Spacer horizontal mount for columns Ø600mm white	EA	$12.01	$1.20	10	-
137HS8WE	Spacer horizontal mount for columns Ø800mm white	EA	$12.01	$1.20	10	-
137V3WE	Mounting block vertical mount 16 mm deep for columns Ø300mm white	EA	$12.16	$1.22	10	-
137V4WE	Mounting block vertical mount 16 mm deep for columns Ø400mm white	EA	$12.16	$1.22	10	-
137V5WE	Mounting block vertical mount 16 mm deep for columns Ø500mm white	EA	$12.16	$1.22	10	-
137V6WE	Mounting block vertical mount 16 mm deep for columns Ø600mm white	EA	$12.16	$1.22	10	-
137V8WE	Mounting block vertical mount 16 mm deep for columns Ø800mm white	EA	$12.16	$1.22	10	-
137VS3WE	Spacer vertical mount 16mm deep for columns Ø300mm white	EA	$12.01	$1.20	10	-
137VS4WE	Spacer vertical mount 16mm deep for columns Ø400mm white	EA	$12.01	$1.20	10	-
137VS5WE	Spacer vertical mount 16mm deep for columns Ø500mm white	EA	$12.01	$1.20	10	-
137VS6WE	Spacer vertical mount 16mm deep for columns Ø600mm white	EA	$12.01	$1.20	10	-
137VS8WE	Spacer vertical mount 16mm deep for columns Ø800mm white	EA	$12.01	$1.20	10	-
	Surface mounting blocks for 4 gang powerpoints and square plate					
137/1WE	Mounting block 16mm deep for 4 gang powerpoints white	EA	$14.52	$1.45	10	160
137/1BL	Mounting block 16mm deep for 4 gang powerpoints black	EA	$15.24	$1.52	10	160

N New product | ECO Energy Saving products | More info available. See technical pages | COMING SOON Coming soon | Product to be discontinued

Whilst most items are stock lines some products are made to order. UoM = Unit Of Measure.
Prices are effective 1 June 2017 and are subject to change without notice. Trade prices exclude GST.

Accessories

Installation accessories

141WE 156WE

239WE 404 413

Cat.Nos	Mounting blocks	UoM	Trade price $	GST $	Box qty	Carton qty
	Mounting blocks - chemical resistant					
137DCHWE	Mounting block 18mm deep for switches & GPOs white	EA	$13.60	$1.36	10	300
140CHWE	Mounting block 37mm deep for switches, GPOs and electronic modules white	EA	$13.45	$1.34	10	180
	Surface mounting blocks - architrave size					
141WE	Mounting block for 1 gang architrave 57mm 74x28x25mm white	EA	$7.36	$0.74	10	-
141BL	Mounting block for 1 gang architrave 57mm 74x28x25mm black	EA	$7.36	$0.74	10	-
156WE	Mounting block for 2 gang architrave 70mm 86x36x26mm white	EA	$13.21	$1.32	10	200
156BL	Mounting block for 2 gang architrave 70mm 86x36x26mm black	EA	$12.72	$1.27	10	200
	Weatherproof mounting blocks					
239WE	Mounting block for switches & GPOs weatherproof IP56 120x75x44mm white	EA	$10.25	$1.02	8	80
239BL	Mounting block for switches & GPOs weatherproof IP56 120x75x44mm black	EA	$10.25	$1.02	8	80
WS44B	Mounting block for WS44 series weatherproof IP53 83x83x39mm white	EA	$16.79	$1.68	1	30
	Weatherproof surface mounting bases					
170	Mounting block for WS40 series weatherproof IP53 83x83x39mm grey	EA	$14.31	$1.43	5	-
	Junction boxes					
404	Junction box with 4 x 40A connectors (3x1+1x2 screws) 68x68x38mm white	EA	$6.65	$0.66	10	200
405	Junction box without connectors 68x89x44mm white	EA	$6.93	$0.69	10	140
406	Junction box with 4 x 50A connectors (3x1+1x2 screws) 68x89x44mm white	EA	$6.61	$0.66	10	140
413	Junction box with 3 terminals 6mm 30A 37x68x22mm white	EA	$10.76	$1.08	10	450
413S	Junction box with 3 terminals 6mm 30A & cord grip entry 37x78x22mm	EA	$14.60	$1.46	10	450
413LA	Terminal box enclosed for use by telecommunication providers 37x68x22mm	EA	$21.71	$2.17	10	450
J170	Junction box wproof with 4 x 40A connectors (3x1+1x2 screws) 83x83x65mm	EA	$27.63	$2.76	5	60

N New product | ECO Energy Saving products | More info available. See technical pages | COMING SOON Coming soon | Product to be discontinued

Whilst most items are stock lines some products are made to order. UoM = Unit Of Measure.
Prices are effective 1 June 2017 and are subject to change without notice. Trade prices exclude GST.

General wiring accessories

Plug tops and plug bases

100LWE

106/3WE

37CL

38WE

33WE

Cat.Nos	Plug tops	UoM	Trade price $	GST $	Box qty	Carton qty
	10A plug tops					
100LWE	Plug top flexible PVC cover with cord locking nut 3 flat pins white	EA	$6.14	$0.61	10	200
100LCL	Plug top flexible PVC cover with cord locking nut 3 flat pins clear	EA	$6.14	$0.61	10	200
106/1WE	Plug top low profile side entry 3 flat pins white	EA	$6.78	$0.68	10	200
106/1BL	Plug top low profile side entry 3 flat pins black	EA	$6.78	$0.68	10	200
106/2WE	Plug top slim side entry 3 flat pins white suits 15A hd flex. cord	EA	$7.00	$0.70	10	200
106/6WE	Plug top low profile side entry flat A&N/round earth white	EA	$11.13	$1.11	10	200
106/7WE	Plug top low profile side entry round A&N/flat earth white	EA	$12.30	$1.23	10	200
90BL	Plug top finger grip rigid impact resistant 3 flat pins black	EA	$6.33	$0.63	10	200
94WE	Plug top finger grip rigid impact resistant moulding 4 pins white	EA	$14.52	$1.45	10	200
	15A plug tops					
106/3WE	Plug top low profile side entry 3 flat pins white	EA	$9.99	$1.00	10	200
90/15WE	Plug top finger grip rigid impact resistant 3 flat pins white	EA	$8.75	$0.88	10	200
	20A plug tops					
106/4WE	Plug top low profile side entry 3 flat pins white	EA	$18.57	$1.86	10	200
90/20WE	Plug top finger grip rigid impact resistant 3 flat pins white	EA	$19.61	$1.96	10	200
	25A plug tops					
106/5WE	Plug top low profile side entry flat A&N/ L shape earth white	EA	$22.07	$2.21	10	200
90/25WE	Plug top finger grip rigid impact resistant flat A&N/ L shape earth white	EA	$22.92	$2.29	10	200
	32A plug tops					
106/8WE	Plug top low profile side entry flat A&N/U shape earth white	EA	$24.09	$2.41	10	200
	Safety switch					
D5100	Plug top safety switch	EA	$130.64	$13.06	5	50
D5101	Plug Top safety switch with 1.6m lead N	EA	$151.12	$15.11	5	50

	Plug bases					
	10A plug bases					
37CL	Plug base single surface mount 3 flat pins 50mm m. centres clear	EA	$9.31	$0.93	10	100
37BL	Plug base single surface mount 3 flat pins 50mm m. centres black	EA	$10.93	$1.09	10	200
37RCL	Plug base single surface mount flat A&N round earth 50mm m. centres clear	EA	$21.22	$2.12	10	100
38WE	Plug base single flush mount 3 flat pins for 2.5mm panels white	EA	$15.57	$1.56	10	200
38A0BL	Plug base single flush mount 3 flat pins for 1mm panels black	EA	$13.83	$1.38	10	200
33WE	Plug base single surface mount 4 flat pins 50mm m. centres white	EA	$19.26	$1.93	10	200

N New product | ECO Energy Saving products | More info available. See technical pages | COMING SOON Coming soon | Product to be discontinued

Whilst most items are stock lines some products are made to order. UoM = Unit Of Measure.
Prices are effective 1 June 2017 and are subject to change without notice. Trade prices exclude GST.

General wiring accessories

Plug tops and plug bases

35WE

35BL

38/1WE

CD1002

Cat.Nos	Plug bases	UoM	Trade price $	GST $	Box qty	Carton qty
	10A plug bases					
37/2CL	Plug base double surface mount 3 flat pins 84mm m. centres clear	EA	$20.62	$2.06	5	50
38BL	Plug base single flush mount 3 flat pins for 2.5mm panels black	EA	$15.57	$1.56	10	200
38A0WE	Plug base single flush mount 3 flat pins for 1mm panels white	EA	$13.83	$1.38	10	200
38A1WE	Plug base single flush mount 3 flat pins for 1.2mm panels white	EA	$13.83	$1.38	10	200
38RWE	Plug base single flush mount flat A&N/round earth for 2.5mm panels white	EA	$24.02	$2.40	10	200
35WE	Plug base single surface mount 3 flat pins white	EA	$23.67	$2.37	10	200
35BL	Plug base single surface mount 3 flat pins black	EA	$23.67	$2.37	10	200
38A1BL	Plug base single flush mount 3 flat pins for 1.2mm panels black	EA	$13.83	$1.38	10	200
33B	Snap-on base plate for 33 series plug bases	EA	$1.47	$0.15	10	200
34BCL	Snap-on base plate for 34 series plug bases clear	EA	$3.65	$0.36	10	200
37B	Snap-on base plate for 37 series plug bases	EA	$2.21	$0.22	10	200
	15A plug bases					
37/15CL	Plug base single surface mount 3 flat pins 50mm m. centres clear	EA	$22.17	$2.22	10	100
38/15WE	Plug base single flush mount 3 flat pins for 2.5mm panels white	EA	$24.86	$2.49	10	-
38/15BL	Plug base single flush mount 3 flat pins for 2.5mm panels black	EA	$24.86	$2.49	10	-
	20A plug bases					
38/20WE	Plug base single flush mount 3 flat pins for 2.5mm panels white	EA	$25.72	$2.57	10	200
	25A plug bases					
38/25WE	Plug base single flush mount flat A&N/L earth for 2.5mm panels white	EA	$31.30	$3.13	10	200
	10A panel or flush mounted plug bases					
38/2RWE	Plug base single flush mount flat A&N/round earth for 2.5mm panels white	EA	$27.96	$2.80	10	200
38A3WE	Plug base single flush mount 3 flat pins for 1.6mm panels white	EA	$13.83	$1.38	10	200
38A3BL	Plug base single flush mount 3 flat pins for 1.6mm panels black	EA	$13.83	$1.38	10	200
	Plug base and plate assemblies					
38/1WE	Plug base & plate single surface mount 3 flat pins 95mm m. centres white	EA	$20.08	$2.01	10	-
	Safety plugs					
CD1002	Safety plug 3 pins pk of 6	PK	$8.89	$0.89	10	200
D1002/1	Safety plug slimline 3 pins pk of 12	PK	$8.85	$0.88	10	200

N New product | ECO Energy Saving products | More info available. See technical pages | COMING SOON Coming soon | Product to be discontinued

Whilst most items are stock lines some products are made to order. UoM = Unit Of Measure.
Prices are effective 1 June 2017 and are subject to change without notice. Trade prices exclude GST.

Mobile products

Powerboards

D105/5TRPACC

D105MS4WE

D104WE

D104PACC

D104PAUSBWE

D105PAUSBWE

Cat.Nos	Standard 10A 2400W	UoM	Trade price $	GST $	Box qty	Carton qty
R105	4 outlets white overload protection 0.9m lead	EA	$14.60	$1.46	10	50
D105/1	4 outlets white overload protection 1.8m lead	EA	$21.45	$2.14	5	45
D105/4TR	4 outlets white overload protection 0.9m lead transf. space	EA	$17.94	$1.79	8	32
D105/4TRPA	4 outlets white overload protection 0.9m lead 150J surge transf. space	EA	$27.09	$2.71	8	32
D105/5TRPA	5 outlets white overload protection 1.8m lead 150J surge transf. space	EA	$47.37	$4.74	5	30
D105/5TRPACC	5 outlets charcoal overload protection 1.8m lead 525J surge transf. space	EA	$45.98	$4.60	5	30
R105/6	6 outlets white overload protection 0.9m lead	EA	$19.70	$1.97	10	50
R105/6TWIN	6 outlets white overload protection 0.9m lead twin pack	EA	$30.77	$3.08	5	20
D105PA6	6 outlets white overload protection 0.9m lead 150J surge	EA	$41.86	$4.19	5	30
D105PA6CC	6 outlets charcoal overload protection 0.9m lead 150J surge	EA	$37.94	$3.79	4	32
D105PA8	8 outlets white overload protection 0.9m lead 150J surge	EA	$37.26	$3.73	5	25
D105PA8CC	8 outlets charcoal overload protection 0.9m lead 150J surge	EA	$39.00	$3.90	5	25
	Master switch 10A 2400W					
D105MS4WE	4 outlets white overload protection 3m lead 375 surge	EA	$40.44	$4.04	5	20
D105MS6WE	6 outlets white overload protection 3m lead 375 surge	EA	$43.81	$4.38	5	20
D105MS6RJWE	6 outlets white RJ 11 protection overload protection 3m lead 375 surge	EA	$47.18	$4.72	5	20
	Individual switched outlets 10A 2400W					
D104WE	4 outlets white overload protection 0.9m lead	EA	$53.10	$5.31	3	18
D104PAWE	4 outlets white overload protection 1.8m lead 175J surge	EA	$106.46	$10.65	3	18
D104PACC	4 outlets charcoal overload protection 3m lead 525J surge	EA	$103.37	$10.34	3	18
D104PA6	6 outlets white overload protection 1.8m lead 175J surge	EA	$102.37	$10.24	5	20
	USB chargers 10A 2400W					
D104PAUSBWE	4 outlets white overload protection 1.8m lead 525J surge 2 x 2.4A USB	EA	$99.97	$10.00	4	24
D105PAUSBWE	4 outlets white overload protect 1.5m lead 175J surge 2.4A total USB	EA	$50.55	$5.06	6	36
	TV & AV 10A 2400W					
D105TVAV4BL	4 outlets black overload protection 2m lead 875J surge	EA	$71.90	$7.19	6	20
D105TVAV6BL	6 outlets black overload protection 3m lead 2800J surge	EA	$87.53	$8.75	4	16
D105TVAV8BL	6 outlets black overload protection 3m lead 3150J surge	EA	$103.16	$10.32	4	12
D105/12TRPA	12 outlets white overload protection 1.8m lead 150J surge	EA	$79.06	$7.91	8	16
D105/12TRPPCC	12 outlets charcoal overload protection 1.8m lead 150J surge	EA	$88.58	$8.86	8	16

N New product | ECO Energy Saving products | More info available. See technical pages | COMING SOON Coming soon | Product to be discontinued

Whilst most items are stock lines some products are made to order. UoM = Unit Of Measure.
Prices are effective 1 June 2017 and are subject to change without notice. Trade prices exclude GST.

Mobile products

Powerboards

D105SSPA4

D105POD4

D105PBOSSPA4

D105PBOSSELPA8

REPC410USB

REPC11015

Cat.Nos	Child-safe 10A 2400W	UoM	Trade price $	GST $	Box qty	Carton qty
D105SSPA4	4 outlets white overload protection 0.9m lead 150J surge	EA	$31.09	$3.11	4	40
D105POD4	4 outlets white overload protection 1.8m lead 900J surge	EA	$31.04	$3.10	3	18
D105POD6	6 outlets white overload protection 1.8m lead 900J surge	EA	$38.87	$3.89	3	18
	Plugboss heavy duty 10A 2400W					
D105PBOSSPA4	4 outlets yellow/black overload protection 3.0m lead 900J surge	EA	$44.47	$4.45	5	20
D105PBOSS5	5 outlets yellow/black overload protection 1.8m lead	EA	$45.59	$4.56	5	20
D105PBOSSPA6	6 outlets yellow/black overload protection 3.0m lead 350J surge	EA	$70.13	$7.01	4	12
D105PBOSSELPA8	8 outlets yellow/black overload protection RCD protect 3.0m lead 350J surge	EA	$147.51	$14.75	4	12
	Worksite portable powercentre					
	10A 2400W					
REPC410	4 outlets IP33 orange RCBO protection 1.8m lead	EA	$256.92	$25.69	-	9
REPC410USB	4 outlets IP33 orange RCBO protect. 1.8m lead 2 x 2.4A USB	EA	$255.51	$25.55	-	9
	15A 3600W					
REPC415	4 outlets IP33 orange RCBO protection 1.8m lead	EA	$335.34	$33.53	-	9
	Power adaptor					
REPC11015	15A to 10A IP33 charcoal 1.8m lead RCBO protect ideal for caravans	EA	$248.86	$24.89	-	9

N New product | ECO Energy Saving products | More info available. See technical pages | COMING SOON Coming soon | Product to be discontinued

Whilst most items are stock lines some products are made to order. UoM = Unit Of Measure.
Prices are effective 1 June 2017 and are subject to change without notice. Trade prices exclude GST.

Mobile products

Household extension leads

R2710

R2610

R2702EB

R2815GL

Cat.Nos	Household duty 10A 2400W	UoM	Trade price $	GST $	Box qty	Carton qty
	Standard					
R2702	2m lead white 3 core 1.0mm²	EA	$15.52	$1.55	10	40
R2703	3m lead white 3 core 1.0mm²	EA	$18.52	$1.85	10	40
R2705	5m lead white 3 core 1.0mm²	EA	$20.79	$2.08	5	25
R2707	7m lead white 3 core 1.0mm²	EA	$22.91	$2.29	5	20
R2710	10m lead white 3 core 1.0mm²	EA	$30.52	$3.05	5	15
R2715	15m lead white 3 core 1.0mm²	EA	$39.42	$3.94	5	10
R2720	20m lead white 3 core 1.0mm²	EA	$48.30	$4.83	4	8
	Piggyback socket					
R2601	1m lead white 3 core 1.0mm²	EA	$13.62	$1.36	10	40
R2602	2m lead white 3 core 1.0mm²	EA	$15.65	$1.56	10	40
R2604	4m lead white 3 core 1.0mm²	EA	$20.98	$2.10	5	20
R2606	6m lead white 3 core 1.0mm²	EA	$27.40	$2.74	5	20
R2610	10m lead white 3 core 1.0mm²	EA	$35.18	$3.52	5	15
	Entertainment					
R2702EB	2m lead black 3 core 1.0mm²	EA	$17.77	$1.78	10	40
R2703EB	3m lead black 3 core 1.0mm²	EA	$20.66	$2.07	10	40
R2705EB	5m lead black 3 core 1.0mm²	EA	$22.83	$2.28	5	25
	Garden heavy duty					
R2815GL	15m lead yellow/green 3 core 1.0mm²	EA	$69.54	$6.95	-	5
R2825GL	25m lead yellow/green 3 core 1.0mm²	EA	$87.84	$8.78	-	5

N New product | ECO Energy Saving products | More info available. See technical pages | COMING SOON Coming soon | Product to be discontinued

Whilst most items are stock lines some products are made to order. UoM = Unit Of Measure.
Prices are effective 1 June 2017 and are subject to change without notice. Trade prices exclude GST.

Mobile products

Heavy duty extension leads

R2820

R2825L

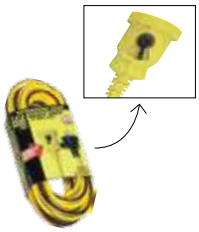
R2820PBL

R5102/1

Cat.Nos	Heavy duty 10A 2400W	UoM	Trade price $	GST $	Box qty	Carton qty
	Standard					
R2805	5m lead yellow 3 core 1.0mm²	EA	$26.85	$2.68	-	5
R2810	10m lead yellow 3 core 1.0mm²	EA	$50.78	$5.08	-	5
R2815	15m lead yellow 3 core 1.0mm²	EA	$66.01	$6.60	-	5
R2820	20m lead yellow 3 core 1.0mm²	EA	$82.21	$8.22	-	5
R2825	25m lead yellow 3 core 1.0mm²	EA	$98.35	$9.84	-	5
	Locking socket					
R2810L	10m lead yellow 3 core 1.0mm²	EA	$57.84	$5.78	-	5
R2815L	15m lead yellow 3 core 1.0mm²	EA	$75.31	$7.53	-	5
R2820L	20m lead yellow 3 core 1.0mm²	EA	$92.57	$9.26	-	5
R2825L	25m lead yellow 3 core 1.0mm²	EA	$109.78	$10.98	-	5
	Plugboss locking socket					
R2810PBL	10m lead yellow/black 3 core 1.0mm²	EA	$63.32	$6.33	-	5
R2820PBL	20m lead yellow/black 3 core 1.0mm²	EA	$98.63	$9.86	-	5

	Heavy duty lead 10A 2400W with inline RCD					
R5102/1	2m lead IP66 RCD protection yellow 3 core 1.5mm²	EA	$191.09	$19.11	5	25

N New product | ECO Energy Saving products | More info available. See technical pages | COMING SOON Coming soon | Product to be discontinued

Whilst most items are stock lines some products are made to order. UoM = Unit Of Measure.
Prices are effective 1 June 2017 and are subject to change without notice. Trade prices exclude GST.

Mobile products

Extra heavy duty extension leads and cable reels

R2910/15V

2920TL

R2920/15CV

CD107

Cat.Nos	Extra heavy duty	UoM	Trade price $	GST $	Box qty	Carton qty
	Caravan 15A 3600W					
R2908/15	8m lead orange 3 core 1.5mm²	EA	$49.80	$4.98	-	5
R2915/15CV	15m lead orange 3 core 1.5mm²	EA	$79.05	$7.90	-	3
R2920/15CV	20m lead orange 3 core 1.5mm²	EA	$94.93	$9.49	-	3
R2925/15CV	25m lead orange 3 core 1.5mm²	EA	$110.80	$11.08	-	3
	Tradesman 10A 2400W					
R2920	20m lead orange 3 core 1.5mm²	EA	$89.40	$8.94	-	5
R2930	30m lead orange 3 core 1.5mm²	EA	$123.32	$12.33	-	3
R2935	35m lead orange 3 core 1.5mm²	EA	$161.68	$16.17	-	3
	Accessories					
CD107	Cord locks for 3 pin plugs and extension sockets yellow	EA	$7.20	$0.72	5	50
RHH01	Carry straps for leads and hoses up to 5kg orange	EA	$8.47	$0.85	32	160
	Cable reels 10A 2400W					
D105CR10ODS	10m standard lead 4 outlets black 3 core 1.0mm²	EA	$64.52	$6.45	-	3
D105CR20XDS	20m extra heavy duty lead 4 outlets orange 3 core 1.5mm²	EA	$124.39	$12.44	-	3

N New product | ECO Energy Saving products | More info available. See technical pages | COMING SOON Coming soon | Product to be discontinued

Whilst most items are stock lines some products are made to order. UoM = Unit Of Measure.
Prices are effective 1 June 2017 and are subject to change without notice. Trade prices exclude GST.

Mobile products

USB chargers and plug-in timers

D2USB

PS2USB

D4USB

(D810SLIM)
D810SLIMDP

D818OD

(D817SLIM)
D817SLIMDP

Cat.Nos	USB chargers			UoM	Trade price $	GST $	Box qty	Carton qty
D2USB	Single adaptor with USB charger 10A socket 2x2.4A USB			EA	$44.55	$4.46	-	-
PS2USB	Twin USB charging station socket 2x2.4A USB			EA	$44.55	$4.46	-	-
PS5USB	5 port USB charging station 7.2A total	N		EA	$82.32	$7.48	-	-
D2USB121	World travel pack AUS/UK/USA/EUR socket 2x2.4A USB			EA	$54.00	$5.40	-	-
D4USB	4 port world travel pack AUS/UK/USA/EUR 2x2.4A & 2x1A	N		EA	$82.32	$8.23	-	-
	Analogue timers 10A 2400W							
D818	24h 15min increments		ECO	EA	$33.56	$3.36	-	-
D818DP	NSW 24h 15min increments double pole†	N		EA	$35.90	$3.59	-	-
D809/1	24h 15min increments with offset		ECO	EA	$13.62	$1.36	-	-
D809/1DP	NSW 24h 15min increments with offset double pole	N		EA	$16.90	$1.69	-	-
D810/2	24h compact 15min increments		ECO	EA	$23.41	$2.34	-	-
D810/2DP	NSW 24h compact 15min increments double pole†	N		EA	$25.90	$2.59	-	-
D819/2	24h easy set override switch 15min increments		ECO	EA	$21.83	$2.18	-	-
D809/1TWIN	24h twin pack 15min increments with offset		ECO	EA	$21.64	$2.16	-	-
D809/1TWIND	NSW 24h twin pack 15min increments with offset double pole	N		EA	$24.90	$2.49	-	-
D810SLIM	24h slimline 30min increments		ECO	EA	$27.32	$2.73	-	-
D810SLIMDP	NSW 24h slimline 30min increments double-pole*	N	ECO	EA	$27.32	$2.73	-	-
D810SLIMTP	24h slimline twin pack 30min increments		ECO	EA	$33.15	$3.32	-	-
D810SLIMTPDP	NSW 24h slimline twin pack 30min increments double-pole*	N	ECO	EA	$34.90	$3.49	-	-
	Analogue outdoor timers 10A 2400W							
D819/2DP	NSW 24h easy set override switch 15min increments double pole†	N		EA	$24.90	$2.49	-	-
D818ODDP	NSW 24h 30min increments analogue IP44 heavy duty M40 motor rating double-pole*	N	ECO	EA	$37.90	$3.79	-	-
	Digital timers 10A 2400W							
D817/2	7 day 1min increments up to 14 ON/OFF settings per day battery back up		ECO	EA	$41.94	$4.19	-	-
D817/2DP	NSW 7 day 1min increments up to 14 ON/OFF settings per day battery back up double-pole*	N	ECO	EA	$43.90	$4.39	-	-
D817SLIM	7 day slimline 1min increments up to 16 ON/OFF settings per day battery back up		ECO	EA	$49.08	$4.91	-	-
D817SLIMDP	NSW 7 day slimline 1min increments up to 16 ON/OFF settings per day battery back up double-pole*	N	ECO	EA	$49.90	$4.99	-	-
D817SLIMTP	7 day slim. twin pack 1min increments up to 16 ON/OFF settings per day battery back up		ECO	EA	$85.13	$8.51	-	-
D817SLIMTPDP	NSW 7 day slim. twin pack 1min increments up to 16 ON/OFF settings per day battery back up double-pole*	N	ECO	EA	$83.90	$8.39	-	-

*Note

NSW Customers: Due to recent regulation changes, timers sold in NSW must be double-pole (Cat. Nos ending with DP). Single-pole timers will not be sold to NSW customers.

† Availability November 2017

N New product | ECO Energy Saving products | More info available. See technical pages | COMING SOON Coming soon | Product to be discontinued

Whilst most items are stock lines some products are made to order. UoM = Unit Of Measure.
Prices are effective 1 June 2017 and are subject to change without notice. Trade prices exclude GST.

Mobile products

Adaptors and others

D102WE

D2/2WE

D2PAB

D121

R1202

Cat.Nos	Double adaptors 10A 2400W	UoM	Trade price $	GST $	Box qty	Carton qty
D102WE	Vertical white	EA	$6.33	$0.63	10	240
R102WE	Vertical white with display tag	EA	$6.33	$0.63	10	240
D2WE	Right extend white	EA	$6.34	$0.63	5	120
D2LWE	Left extend white	EA	$6.71	$0.67	5	120
D2/2WE	Twin pack left & right extend white	PK	$12.70	$1.27	5	100
D2PA	Right extend white 175J surge	EA	$23.00	$2.30	5	100
D2PAB	Right extend white audible alert 175J surge	EA	$22.94	$2.29	5	100
D2PA/2WE	Twin pack left & right extend white 175J surge N	EA	$23.07	$2.31	5	100
	International travel adaptors 10A 2400W					
D121	Complete set EUR/USA/UK white	EA	$33.91	$3.39	5	50
D122	For EUR/USA travellers to AUS/NZ white	EA	$15.38	$1.54	10	200
D121E	For AUS/NZ travellers to EUR white	EA	$11.40	$1.14	5	120
D121UK	For AUS/NZ travellers to UK white	EA	$14.31	$1.43	5	120
D121A	For AUS/NZ travellers to USA white	EA	$11.40	$1.14	5	120
	Fuse wire					
R1202	Fuse wire 8A /16A pack of 2 fuse wires	PK	$1.95	$0.20	10	100

N New product | ECO Energy Saving products | More info available. See technical pages | COMING SOON Coming soon | Product to be discontinued

Whilst most items are stock lines some products are made to order. UoM = Unit Of Measure.
Prices are effective 1 June 2017 and are subject to change without notice. Trade prices exclude GST.

HOME AUTOMATION & DOOR ENTRY

Home Automation

P. 282
MyHOME®
Automation Kits

Multiroom Audio

P. 284
NUVO®
Audio Kits

Door Entry Systems

P. 283
Smart" Door Entry Kit
(Wi-Fi Enabled)

Door Chimes

P. 285
Door Chimes
Battery-Operated

FEATURED PRODUCTS

Bluetooth Sound System
(p. 284)

NUVO® Multiroom Audio Kits
(p. 284)

P. 282
Zigbee Wireless
Control Kits

P. 284
Players/
Amplifiers

P. 284
Speakers

P. 284
Bluetooth Sound
System

P. 283
Door Entry
Kits

P. 283
Colour Video Monitors

P. 285
Door Chimes
Plug-In

P. 285
Bell Presses

Smart Door Entry Kits
(p. 283)

Door Chimes
(p. 285)

Home Automation

MyHOME® home automation and ZigBee pre-programmed kit

MHKIT1

MHKIT4

PRO661

PRO662

088310

Cat.Nos	Pre-configured home automation kits	UoM	Trade price $	GST $	Box qty	Carton qty
	Lighting/dimming control and energy monitoring					
MHKIT1	Kit 3.5" touchscreen with energy monitoring & 5 x 1 gang switches white	PK	$2,854.01	$285.40	-	-
MHKIT2	Kit 3.5" touchscreen with energy monitoring & 1 x 2 gang + 1 x 3 gang switches white	PK	$2,854.01	$285.40	-	-
MHKIT3	Kit 3.5" touchscreen with 3 phase energy monitoring & 5 x 1 gang switches white	PK	$3,407.68	$340.77	-	-
MHKIT4	Kit 3.5" touchscreen with 3 phase energy monitoring & 1 x 2 gang + 1 x 3 gang switches white	PK	$3,407.68	$340.77	-	-
	ZigBee wireless control solutions					
	ZigBee pre-programmed kits					
PR0660	2 wire switch with remote - 300W N	EA	$420.97	$42.10	-	-
PR0661	2 wire switch receiver and wireless switch transmitter - 300W N	EA	$451.78	$45.18	-	-
PR0662	In-ceiling controller and wireless switch transmitter - 300W N	EA	$466.31	$46.63	-	-
PR0663	Wall mounted switch receiver 3 wire and wireless switch transmitter - 2400W N	EA	$469.15	$46.92	-	-
	ZigBee/WiFi gateway					
088310	Plug-in unit gateway for ZigBee products controlled over WiFi N	EA	$316.64	$31.66	10	-

N New product | ECO Energy Saving products | More info available. See technical pages | COMING SOON Coming soon | Product to be discontinued

Whilst most items are stock lines some products are made to order. UoM = Unit Of Measure.
Prices are effective 1 June 2017 and are subject to change without notice. Trade prices exclude GST.

363911

344643

369210

369083

369205

Cat.Nos	Smart door entry kit		UoM	Trade price $	GST $	Box qty	Carton qty
	External panel & internal unit kit (Wi-Fi Enabled)						
363911	Linea 3000 video IP54 2 wire silver & Classe 300X13E Wi-Fi 7" internal unit white	N	EA	$1,599.00	$159.90	1	-
	Additional internal units						
344642	Classe 300X13E Wi-Fi 7" touchscreen 2 wire white	N	EA	$899.00	$89.90	1	-
344643	Classe 300X13E Wi-Fi 7" touchscreen 2 wire black	N	EA	$899.00	$89.90	1	-
	Colour video & audio door entry kits						
	2 wire						
369200	Kit 7" handsfree colour video monitor white & aluminium street panel with LED		EA	$731.97	$73.20	-	6
369210	Kit 7" handsfree colour video monitor black & aluminium street panel with LED		EA	$731.97	$73.20	-	6
	4 wire						
369083	Kit 7" handsfree colour video monitor white & aluminium street panel with LED		EA	$577.21	$57.72	-	6
	Additional colour video monitor						
	2 wire						
369205	7" handsfree colour video monitor white		EA	$343.47	$34.35	-	8
369215	7" handsfree colour video monitor black		EA	$343.47	$34.35	-	8
	4 wire						
369088	7" handsfree colour video monitor white		EA	$319.03	$31.90	-	8

N New product | ECO Energy Saving products | More info available. See technical pages | COMING SOON Coming soon | Product to be discontinued

Whilst most items are stock lines some products are made to order. UoM = Unit Of Measure.
Prices are effective 1 June 2017 and are subject to change without notice. Trade prices exclude GST.

Home Automation

NUVO multiroom audio and Bluetooth sound diffusion

NVP100KAU

NVAP16C

573204

Cat.Nos	Nuvo multiroom audio	UoM	Trade price $	GST $	Box qty	Carton qty
	Audio kit					
NVP100KAU	Wireless player 2x20W + pair of 6.5" in-ceiling speakers	PK	$1,135.78	$113.58	-	-
NVP200KAU	Wireless player 2x60W + pair of 6.5" in-ceiling speakers	PK	$1,333.76	$133.38	-	-
NVP200K3AU	3 zone kit - 3x wireless players 2x60W + 3 pairs of 6.5" in-ceiling speakers	PK	$3,803.30	$380.33	-	-
	Players/amplifiers					
NVP100AU	Wireless player/amplifier 2x20W	EA	$936.76	$93.68	-	5
NVP200AU	Wireless player/amplifier 2x60W	EA	$1,145.16	$114.52	-	5
	Speakers					
NVAP16C	In-ceiling speakers 6.5" 50W 8Ω white (pair)	EA	$311.56	$31.16	-	-
NVAP16I	In-wall speakers 6.5" 50W 8Ω white (pair)	EA	$311.56	$31.16	-	-
NVAP16OW	Outdoor speakers 6.5" 50W 8Ω white (pair)	EA	$404.43	$40.44	-	-
NVAP16RS	Rock outdoor speaker 6.5" 50W 8Ω sandstone (pair)	EA	$655.51	$65.55	-	-
	Accessories					
NVBK6C	In-ceiling rough-in brackets 6.5" (pair)	EA	$38.76	$3.88	-	-
NVBK6I	In-wall rough-in brackets 6.5" (pair)	EA	$32.02	$3.20	-	-

	Bluetooth sound diffusion					
	Bluetooth receiver module					
573204	Bluetooth receiver 15V d.c. stereo outputs 4/16 ohms 2 module white N	EA	$195.00	$19.50	-	-
573704	Bluetooth receiver 15V d.c. stereo outputs 4/16 ohms 2 module magnesium N		$195.00	$19.50	-	-
067322	Power supply 230V a.c./15V d.c. output 3.5W N	EA	$99.00	$9.90	-	-
	Speakers					
573982	In-ceiling speakers 8 ohms 20W round white N	EA	$79.00	$7.90	-	-
067303	In-wall speaker 16 ohms 12W square black N	EA	$99.00	$9.90	-	-

N New product | ECO Energy Saving products | More info available. See technical pages | COMING SOON Coming soon | Product to be discontinued

Whilst most items are stock lines some products are made to order. UoM = Unit Of Measure.
Prices are effective 1 June 2017 and are subject to change without notice. Trade prices exclude GST.

Door Entry

Door chimes

D642/L1

D641/BLRCC

D642/05

D642/01

D641/B

D641/PIFL

Cat.Nos	Wireless battery-operated	UoM	Trade price $	GST $	Box qty	Carton qty
D642/L1	White 100m range 433MHz 80dB 36 mel. with LED indicator	EA	$63.19	$6.32	8	48
D642/L2	White 100m range 433MHz 80dB 36 mel.	EA	$47.22	$4.72	8	48
D641/BLR	White 70m range 433.92MHz 100dB 2 mel.	EA	$51.65	$5.16	5	20
D641/BLRCC	Charcoal 70m range 433.92MHz 100dB 2 mel.	EA	$51.65	$5.16	5	20
D641/BFL	White 70m range 433.92MHz 80dB 2 mel.	EA	$74.20	$7.42	5	50
D642/05	White round 50m range 433.05-434.79MHz 80dB 16 mel. with LED indicator	EA	$24.82	$2.48	4	48
D642/01	White square 50m range 433.05-434.79MHz 80dB 16 mel. with LED indicator	EA	$23.23	$2.32	4	48
D642/012R	White 50m range 433.05-434.79MHz 80dB 16 mel. x2 door chime receivers with LED indicator	EA	$39.20	$3.92	4	48
D641/B	White 30m range 433.92MHz 100dB 2 mel.	EA	$41.21	$4.12	8	80
	Wireless plug-in					
D641/PIFL	White 70m range 433.92MHz 70dB 2 mel. piggyback socket adjustable volume	EA	$125.93	$12.59	5	50
D641/PILR	White 70m range 433.92MHz 70dB 2 mel. piggyback socket	EA	$93.77	$9.38	5	50
D641/PI	White 35m range 433.92MHz 70dB 2 mel.	EA	$66.09	$6.61	5	50
	Wireless bell presses					
D641/BPWE	White single bell press 433.92MHz for D641/PI series	EA	$25.00	$2.50	10	100
D641/BPCC	Charcoal single bell press 433.92MHz for D641/PI series	EA	$25.00	$2.50	10	100

N New product | ECO Energy Saving products | More info available. See technical pages | COMING SOON Coming soon | Product to be discontinued

Whilst most items are stock lines some products are made to order. UoM = Unit Of Measure.
Prices are effective 1 June 2017 and are subject to change without notice. Trade prices exclude GST.

legrand

eliot™
PROGRAM BY LEGRAND

CLASSE300

Connected Video Door Entry System

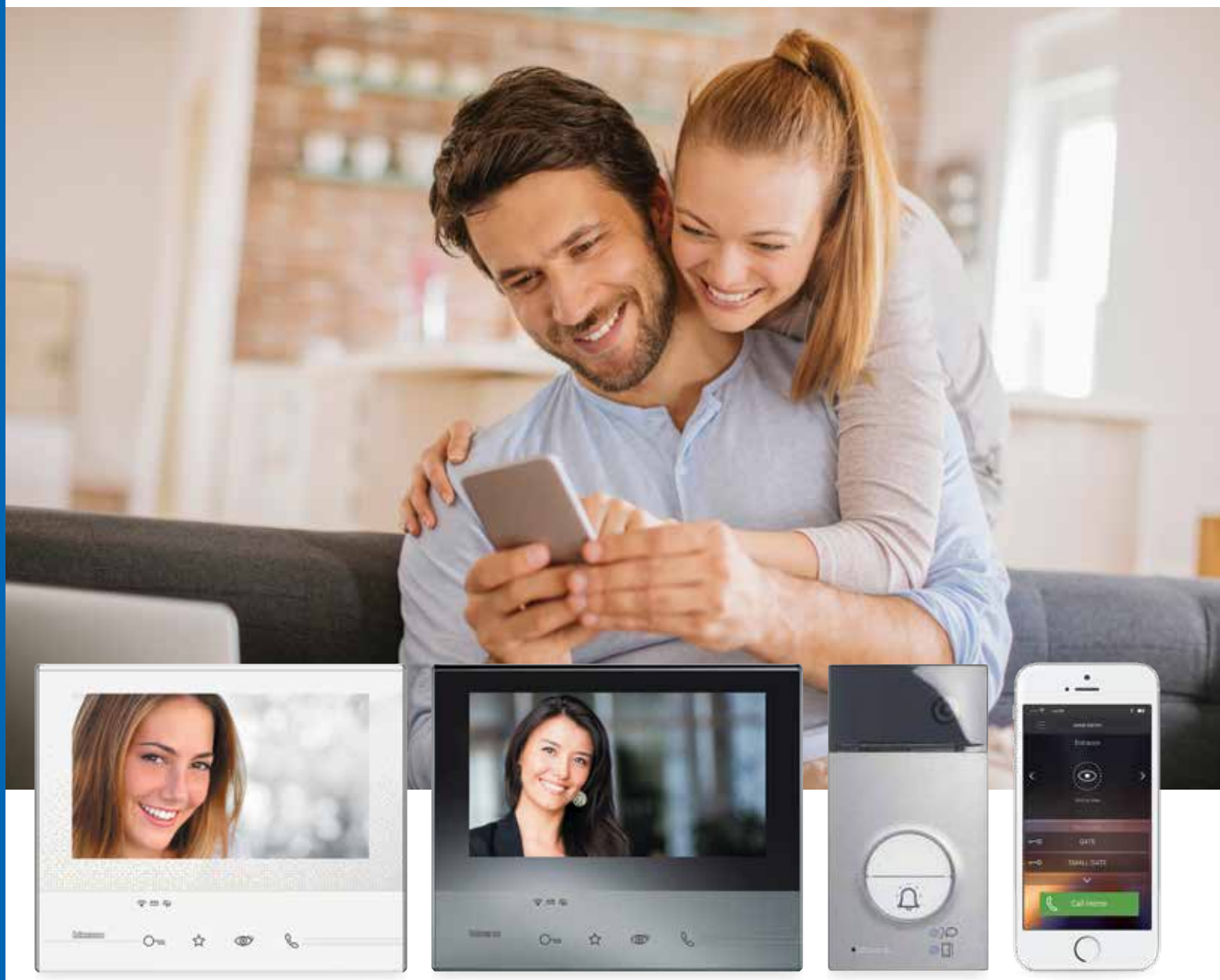

Transform every home into a connected home, easily controlled in the home or remotely using a smartphone.

Classe 300 is part of the Eliot program:
The Internet of Things range from Legrand.

NUVO®

High quality digital music in every room

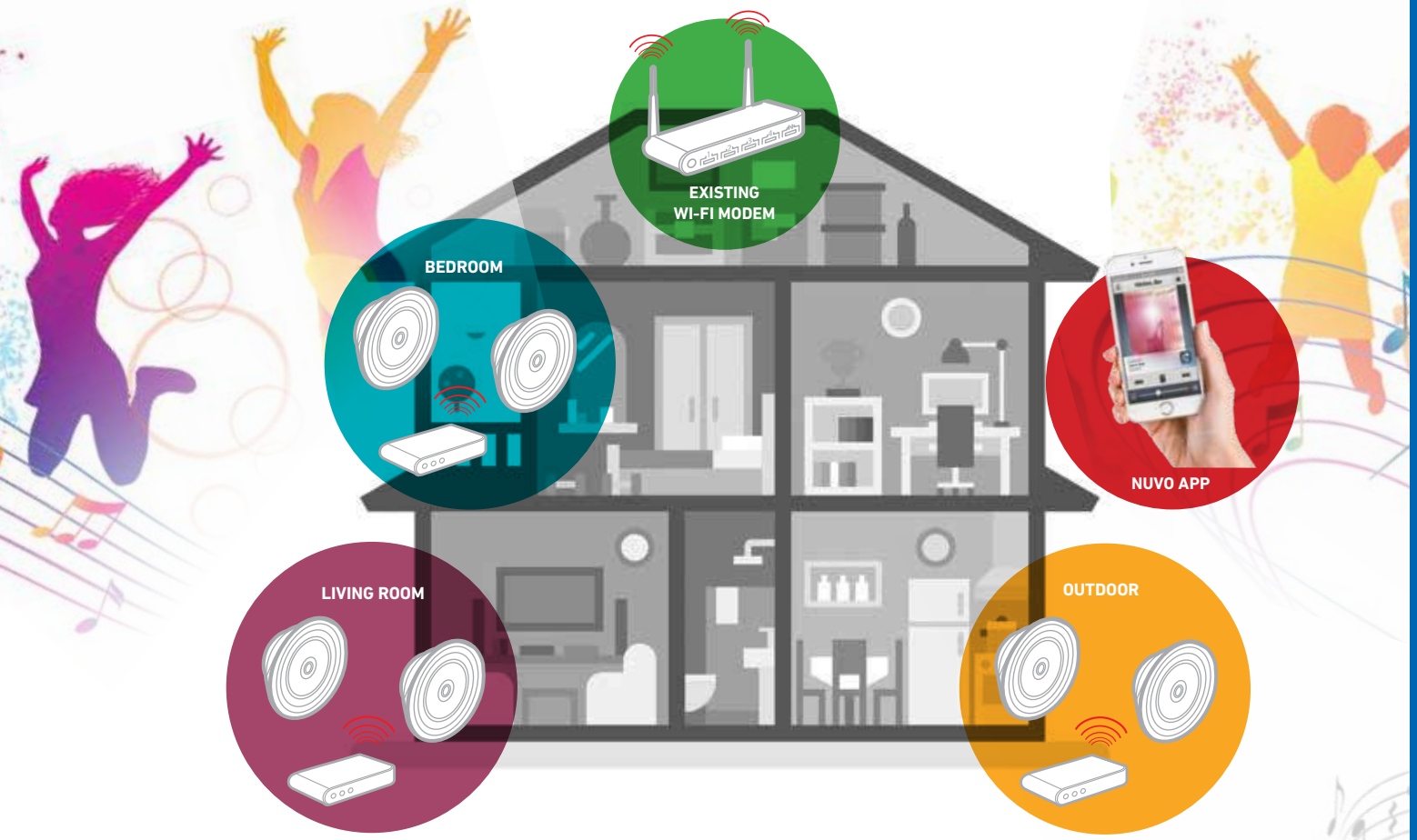

NUVO 3 zone audio kit (NVP200K3AU)

3x

120W Wireless Player/Amplifier

3x

Pair of 6.5" in Ceiling Speakers

VENTILATION

Exhaust Fans

P. 290
Wall Exhaust Fans

Bathroom Heaters

P. 292
Single Lamp
Instant Heat

Ceiling Sweep Fans

P. 293
White
Aluminium Finish

Hand Dryers

P. 294
Hand Dryer

FEATURED PRODUCTS

Wall Exhaust Fans
(p. 290)

Ceiling Exhaust Fans
(p. 290)

In-line Ceiling Exhaust Fans
(p. 291)

P. 290
Ceiling Exhaust Fans

P. 291
In-line Ceiling Exhaust Fans

P. 291
Accessories

P. 292
3-in-1
Non-Ducted Units

P. 292
3-in-1
Ducted Units

P. 292
Replacement
Heat Lamps and Centre Light

P. 293
Stainless
Steel Finish

P. 293
Rattan
White Finish

P. 294
Accessories

Non-Ducted Instant Heat

(p. 292)

Ceiling Sweep Fans

(p. 293)

Ventilation

Exhaust fans

EF100SQWE

EF100SQSWE

EF200RDWE

EF200SQWE

EFD01RDMS

Cat.Nos	Wall exhaust fans		UoM	Trade price $	GST $	Box qty	Carton qty
	100mm						
EF100SQWE	14W square white finish 94m³/h 158 x 158mm fascia	N	EA	$94.54	$9.45	-	4
EF100SQSWE	14W square slimline white finish 105m³/h 158 x 158mm fascia	N	EA	$94.54	$9.45	-	4
EF100RDWE	14W round white finish 105m³/h Ø190mm fascia	N	EA	$94.54	$9.45	-	4
	150mm						
EF150SQWE	24W square white finish 230m³/h 212 x 212mm fascia	N	EA	$208.20	$20.82	-	4
EF150SQSWE	24W square slimline white finish 300m³/h 212 x 212mm fascia	N	EA	$208.20	$20.82	-	4
EF150RDWE	24W round white finish 300m³/h Ø253mm fascia	N	EA	$208.20	$20.82	-	4
EFS150SQWE	24W sq. white finish with shutters 220m³/h 212 x 212mm fascia	N	EA	$274.82	$27.48	-	4
EFS150SQSWE	24W sq. slim white finish with shutters 290m³/h 212 x 212mm fascia	N	EA	$274.82	$27.48	-	4
R621/8A	29W square white finish 245m³/h 225x225mm fascia		EA	$244.41	$24.44	-	4
R621/9A	29W square white finish with shutters 245m³/h 225x225mm fascia		EA	$375.68	$37.57	-	4
	Ceiling exhaust fans						
	200mm non-ducted						
EF200RDWE	35W round white finish 350m³/h Ø287mm fascia	N	EA	$65.48	$6.55	-	4
EF200RDMS	35W round matt silver finish 350m³/h Ø287mm fascia	N	EA	$68.50	$6.85	-	4
EF200SQWE	35W square white finish 350m³/h 275x275mm fascia	N	EA	$65.08	$6.51	-	4
	250mm non-ducted						
EF250RDWE	38W round white finish 400m³/h Ø372mm fascia	N	EA	$65.48	$6.55	-	4
EF250RDMS	38W round matt silver finish 400m³/h Ø372mm fascia	N	EA	$68.50	$6.85	-	4
EF250SQWE	38W square white finish 400m³/h 350x350mm fascia	N	EA	$65.08	$6.51	-	4
	Ducted						
R621D1	34W square white finish 160m³/h 290x290mm fascia		EA	$137.79	$13.78	-	2
R621D2	40W round white finish 300m³/h Ø375mm fascia	✕ ++	EA	$144.92	$14.49	-	2
EFD01RDWE	40W round with white finish 330m³/h Ø372mm fascia	N	EA	$140.54	$14.05	-	-
EFD01RDMS	40W round with matt silver finish 330m³/h Ø372mm fascia	N	EA	$140.54	$14.05	-	-
EFD01SQWE	40W square with white finish 330m³/h Ø372mm fascia	N	EA	$140.54	$14.05	-	-

N New product | ECO Energy Saving products | ++ More info available. See technical pages | COMING SOON Coming soon | ✕ Product to be discontinued

Whilst most items are stock lines some products are made to order. UoM = Unit Of Measure.
Prices are effective 1 June 2017 and are subject to change without notice. Trade prices exclude GST.

Ventilation

Exhaust fans

EFIL100SQWE

R621/6D

R621/6WA

A100

A800

EFGR250RDWE

Cat.Nos	Inline exhaust fans	UoM	Trade price $	GST $	Box qty	Carton qty
EFIL100SQWE	30W 100mm square white finish 255m³/h N ECO	EA	$258.17	$25.82	-	-
EFIL150SQWE	60W 150mm square white finish 555m³/h N ECO	EA	$283.15	$28.32	-	-
	Fanlights non-ducted					
R620LED	49W LED 200mm round white finish 300m³/h Ø340mm fascia N ECO	EA	$230.77	$23.08	-	-
R620	38W 200mm round white finish 300m³/h Ø340mm fascia	EA	$230.77	$23.08	-	-
LM100L	15W 12V a.c. 100mm round white finish IP65 100m³/h Ø150mm fascia	EA	$334.30	$33.43	-	2
	Accessories					
	Wall kits					
R621/4D	100mm external grille, duct, cable ties, wall plugs for 100mm wall fans	EA	$39.16	$3.92	10	10
R621/6D	150mm external grille, duct, cable ties, wall plugs for 150mm wall fans	EA	$47.09	$4.71	10	10
	Window kits					
R621/6WA	150mm external grille, gaskets, flush plate for 150mm wall fans only	EA	$78.62	$7.86	-	10
	Time-delay module					
EF100/150TD	1-29min for EF100&150 series wall fans N	EA	$20.90	$2.09	5	60
	Duct adaptor					
R621D2DA	100 to 150mm duct adaptor	EA	$15.07	$1.51	-	-
	Ducting					
A100	Ø100mm x 3m length	EA	$48.86	$4.89	-	-
A101	Ø150mm x 3m length	EA	$58.09	$5.81	-	-
	External grilles					
A501	Ø150mm eggcrate grille with neck adaptor	EA	$120.69	$12.07	-	12
A505	Ø150mm circular ceiling/wall diffuser	EA	$74.11	$7.41	-	-
A800	Ø100mm airflow shutter with gravity flaps	EA	$40.23	$4.02	-	20
A801	Ø150mm airflow shutter with gravity flaps	EA	$83.14	$8.31	-	10
	Vent cowl					
A701	Ø150mm roof vent cowl	EA	$20.90	$2.09	-	-
	Replacement grilles for HPM ceiling exhaust fans EF series					
EFGR200RDWE	Ø200mm round white finish. Compatible with EF200 series N	EA	$7.50	$0.75	-	-
EFGR250RDWE	Ø250mm round white finish. Compatible with EF250 series N	EA	$8.54	$0.85	-	-

N New product | ECO Energy Saving products | More info available. See technical pages | Coming soon | Product to be discontinued

Whilst most items are stock lines some products are made to order. UoM = Unit Of Measure.
Prices are effective 1 June 2017 and are subject to change without notice. Trade prices exclude GST.

Ventilation

Bathroom heaters

BH1MS

BH2NDWE

BH4NDMS

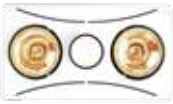
BH2DWE

BH4DWE

LR80014K

Cat.Nos	Single heat lamp units	UoM	Trade price $	GST $	Box qty	Carton qty
BH1WE	275W square white with flex and plug 210 x 210mm fascia	EA	$106.73	$10.67	-	12
BH1MS	275W square matt silver with flex and plug 210 x 210mm fascia	EA	$106.73	$10.67	-	12
R615	275W round white hard wired Ø170mm fascia	EA	$106.73	$10.67	-	10
	3-in-1 non ducted units					
BH2NDWE	2 lamps 690W 240m³/h Ø300mm cut-out white LED centre light	EA	$198.89	$19.89	-	-
BH2NDMS	2 lamps 690W 240m³/h Ø300mm cut-out matt silver LED centre light	EA	$198.89	$19.89	-	-
BH4NDWE	4 lamps 1240W 390m³/h 322 x 322mm cut-out white LED centre light	EA	$266.39	$26.64	-	-
BH4NDMS	4 lamps 1240W 390m³/h 322 x 322mm cut-out matt silver LED centre light	EA	$266.39	$26.64	-	-
R622/1AC	2 lamps 690W 240m³/h Ø300mm cut-out white	EA	$204.96	$20.50	-	-
R622/2AC	4 lamps 1240W 390m³/h 322 x 322mm cut-out white	EA	$274.80	$27.48	-	-
	3-in-1 ducted units					
BH2DWE	2 lamps 840W 180m³/h 205x395mm cut-out white LED centre light	EA	$286.57	$28.66	-	-
BH4DWE	4 lamps 1570W 180m³/h 295x355mm cut-out white LED centre light	EA	$342.26	$34.23	-	-
R622D2	4 lamps 1240W 240m³/h 310x310mm cut-out white	EA	$342.26	$34.23	-	2
	Replacement heat lamps					
L275HLES	275W single pack	EA	$31.65	$3.16	-	20
L375HLES	375W single pack	EA	$35.72	$3.57	-	20
MQ275	275W twin pack	EA	$21.21	$2.12	-	20
	Replacement LED centre Light					
LR80014K	R80 LED lamp cool white 4000K 600lm 7W	EA	$35.43	$3.54	12	108

N New product | ECO Energy Saving products | More info available. See technical pages | COMING SOON Coming soon | Product to be discontinued

Whilst most items are stock lines some products are made to order. UoM = Unit Of Measure.
Prices are effective 1 June 2017 and are subject to change without notice. Trade prices exclude GST.

Ventilation

Ceiling sweep fans

CF9JWE

CF12HWE

CF14H4WE

CF12HBS

CF12J316L

CF13HAW

Cat.Nos	White aluminium	UoM	Trade price $	GST $	Box qty	Carton qty
	3 blades					
CF9HWE	900mm hang-sure 4920m³/h 360rpm 55W	EA	$131.98	$13.20	-	-
CF9JWE	900mm J-hook 4920m³/h 360rpm 55W	EA	$131.98	$13.20	-	-
CF12HWE	1200mm hang-sure 10020m³/h 320rpm 65W	EA	$143.98	$14.40	-	-
CF12JWE	1200mm J-hook 10020m³/h 320rpm 65W	EA	$143.98	$14.40	-	-
CF14HWE	1400mm hang-sure 11040m³/h 280rpm 65W	EA	$155.98	$15.60	-	-
CF14JWE	1400mm J-hook 11040m³/h 280rpm 65W	EA	$155.98	$15.60	-	-
	4 blades					
CF12H4WE	1200mm hang-sure 10800m³/h 290rpm 65W	EA	$160.66	$16.07	-	-
CF12J4WE	1200mm J-hook 10800m³/h 290rpm 65W	EA	$160.66	$16.07	-	-
CF14H4WE	1400mm hang-sure 11880m³/h 255rpm 65W	EA	$173.02	$17.30	-	-
CF14J4WE	1400mm J-hook 11880m³/h 255rpm 65W	EA	$173.02	$17.30	-	-
	430 stainless steel 3 blades					
CF9HBS	900mm hang-sure 4920m³/h 360rpm 55W	EA	$155.98	$15.60	-	-
CF9JBS	900mm J-hook 4920m³/h 360rpm 55W	EA	$155.98	$15.60	-	-
CF12HBS	1200mm hang-sure 10020m³/h 320rpm 65W	EA	$167.98	$16.80	-	-
CF12JBS	1200mm J-hook 10020m³/h 320rpm 65W	EA	$167.98	$16.80	-	-
CF14HBS	1400mm hang-sure 11040m³/h 280rpm 65W	EA	$179.97	$18.00	-	-
CF14JBS	1400mm J-hook 11040m³/h 280rpm 65W	EA	$179.97	$18.00	-	-
	304 stainless steel 3 blades					
CF12J304	1200mm J-hook 10020m³/h 320rpm 65W	EA	$227.97	$22.80	-	-
CF14H304	1400mm hang-sure 11040m³/h 280rpm 65W	EA	$251.97	$25.20	-	-
CF14J304	1400mm J-hook 11040m³/h 280rpm 65W	EA	$251.97	$25.20	-	-
	316L marine grade stainless steel 3 blades					
CF12J316L	1200mm J-hook 10020m³/h 320rpm 65W	EA	$443.94	$44.39	-	-
CF14J316L	1400mm J-hook 11040m³/h 280rpm 65W	EA	$467.93	$46.79	-	-
	Rattan white 4 blades					
CF13HAW	1300mm hang-sure 7800m³/h 200rpm 65W	EA	$191.98	$19.20	-	-

N New product | ECO Energy Saving products | More info available. See technical pages | COMING SOON Coming soon | Product to be discontinued

Whilst most items are stock lines some products are made to order. UoM = Unit Of Measure.
Prices are effective 1 June 2017 and are subject to change without notice. Trade prices exclude GST.

Ventilation

Ceiling sweep fan accessories and hand dryer

CFCLWE

CFOLBS

CFREMOTEH

R623/1000A

Cat.Nos	Replacement blades	UoM	Trade price $	GST $	Box qty	Carton qty
CFBL9WE	Single blades 900mm aluminium white	EA	$14.40	$1.44	-	20
CFBL12WE	Single blades 1200mm aluminium white	EA	$15.60	$1.56	-	20
CFBL14WE	Single blades 1400mm aluminium white	EA	$16.80	$1.68	-	20
CFBL9BS	Single blades 900mm stainless steel 430	EA	$15.00	$1.50	-	20
CFBL12BS	Single blades 1200mm stainless steel 430	EA	$16.19	$1.62	-	20
CFBL14BS	Single blades 1400mm stainless steel 430	EA	$17.40	$1.74	-	20
CFBL14304	Single blades 1400mm stainless steel 304	EA	$33.59	$3.36	-	20
CFBL12316L	Single blades 1200mm stainless steel 316L	EA	$53.99	$5.40	-	20
CFBL14316L	Single blades 1400mm stainless steel 316L	EA	$66.00	$6.60	-	20
	Extension downrods					
CFDR750HWE	750mm downrod aluminium hang-sure white	EA	$28.79	$2.88	-	10
CFDR750JWE	750mm downrod aluminium J-hook white	EA	$28.79	$2.88	-	10
CFDR750HBS	750mm downrod hang-sure stainless steel	EA	$33.59	$3.36	-	10
CFDR750JBS	750mm downrod J-hook stainless steel	EA	$33.59	$3.36	-	10
CFDR1500HWE	1500mm downrod aluminium hang-sure white	EA	$52.79	$5.28	-	10
CFDR1500JWE	1500mm downrod aluminium J-hook white	EA	$52.79	$5.28	-	10
	Light kits					
CFCLWE	Clipper light kit Ø190mm aluminium white	EA	$57.59	$5.76	-	12
CFCLBS	Clipper light kit Ø190mm brushed stainless steel	EA	$57.59	$5.76	-	12
CFOLWE	Oyster light kit Ø245mm aluminium white	EA	$57.59	$5.76	-	12
CFOLBS	Oyster light kit Ø245mm brushed stainless steel	EA	$57.59	$5.76	-	12
	Remote control kit					
CFREMOTEH	Remote control hang-sure white	EA	$77.39	$7.74	-	20
CFREMOTEJ	Remote control J-hook white	EA	$77.39	$7.74	-	20
	Hand dryer					
R623/1000A	Hand dryer 240V a.c. white 1700W	EA	$626.24	$62.62	-	-

N New product | ECO Energy Saving products | More info available. See technical pages | COMING SOON Coming soon | Product to be discontinued

Whilst most items are stock lines some products are made to order. UoM = Unit Of Measure.
Prices are effective 1 June 2017 and are subject to change without notice. Trade prices exclude GST.

Ventilation

Ceiling sweep fan

MOUNTING OPTIONS

HANG-SURE MOUNTING

Suitable for all ceiling types including inclined ceilings up to a 20° angle

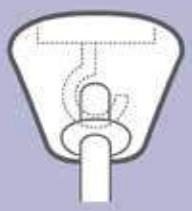

J-HOOK MOUNTING

Suitable for level ceiling only

OVERALL LENGTH

WITH STANDARD ROD

LENGTH	A	B
HANGSURE	300mm	345mm
J HOOK	335mm	380mm

WITH MEDIUM (750MM) ROD

LENGTH	A	B
HANGSURE	915mm	960mm
J HOOK	950mm	995mm

WITH LONG (1500MM) ROD

LENGTH	A	B
HANGSURE	1665mm	1710mm
J HOOK	1700mm	1745mm

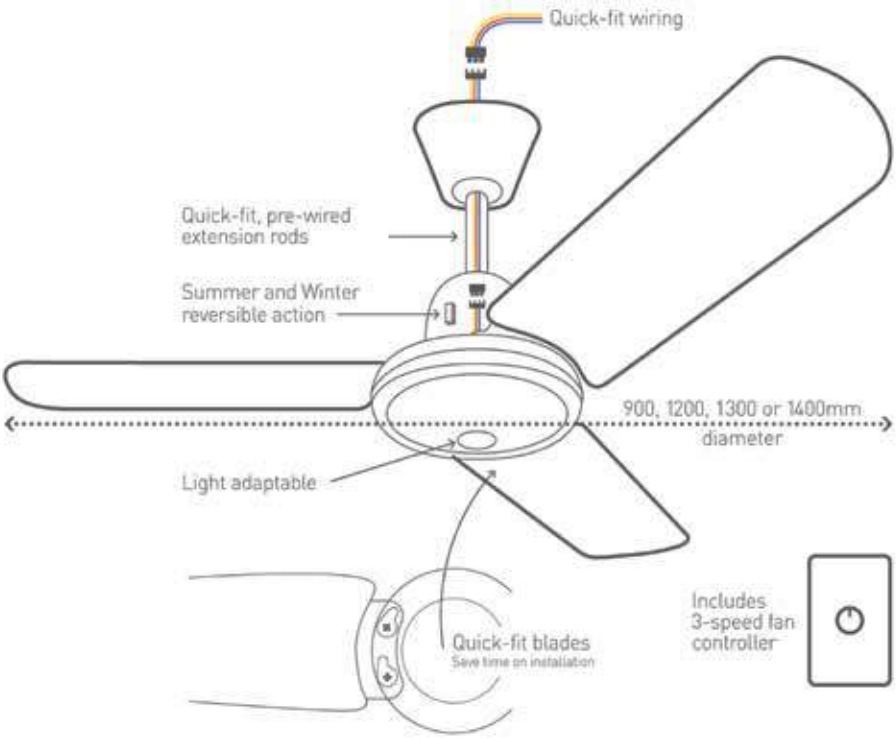

OPTIONAL ACCESSORIES

REMOTE CONTROL KIT*

(CFREMOTEJ / CFREMOTEH)

- 2, 4 & 6 hour timer
- Low, Med & High fan speed
- Low, Med & High light
- Compatible with all models
- Wall bracket include

OYSTER LIGHT KIT

(CFOLWE / CFOLBS)
(LED: CFOLLEDWE/CFOLLEDBS)

- Available in White (WE) and Brushed Stainless Steel (BS)
- Compatible with the entire range
- Easy fit-off
  (Note: globe not included in CFOLWE and CFOLBS)
- CFOLLED includes a dimmable LED panel 8.5 W /630lm

CLIPPER LIGHT KIT

(CFCLWE / CFCLBS)

- Available in White (WE) and Brushed Stainless Steel (BS)
- Compatible with the entire range
- Easy fit-off
  (Note: globe not included)

New product | Energy Saving products | More info available. See technical pages | Coming soon | Product to be discontinued

Whilst most items are stock lines some products are made to order. UoM = Unit Of Measure.
Prices are effective 1 June 2017 and are subject to change without notice. Trade prices exclude GST.

Ducted ceiling exhaust fan installation guidelines

Cat No. R621D2

Compatibility

EF100/150TD is suitable to be fitted on the following wall exhaust fans. Time-delay module allows the fan to run for a set period, adjustable between 1 - 29 min, after the switch has been turned off.

EF100SQWE
EF150SQWE
EFS150SQWE

EF100SQSWE
EF150SQSWE
EFS150SQSWE

EF100RDWE
EF150RDWE

Fan mounting orientation

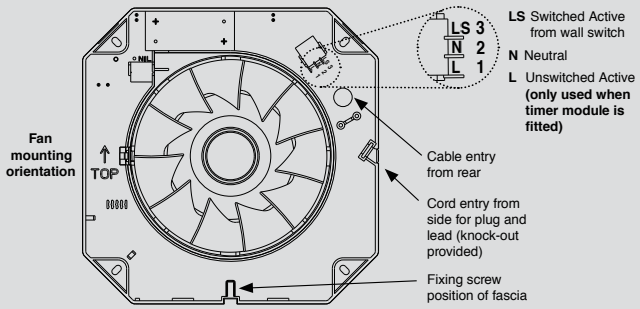

Fan with timer module and light fitting

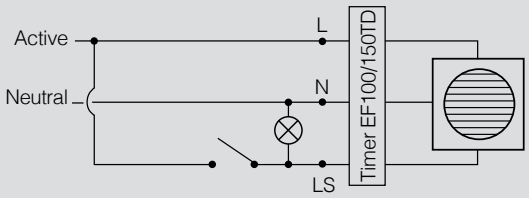

Connection from rear – bring mains wiring through cable entry hole.
Connection from side (Fan only) – use twin flat core (H03VV-H2) or circular core (H05VV-F) 2 x 0.75mm^2 and place under cable clamp provided.

Exhaust fan wiring rules

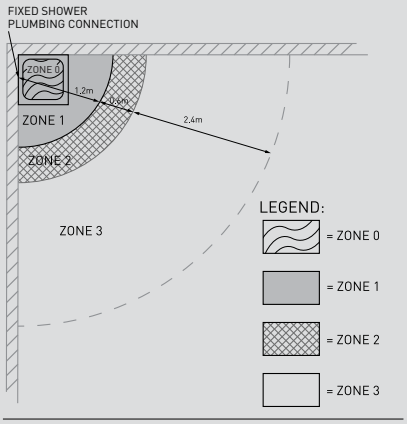

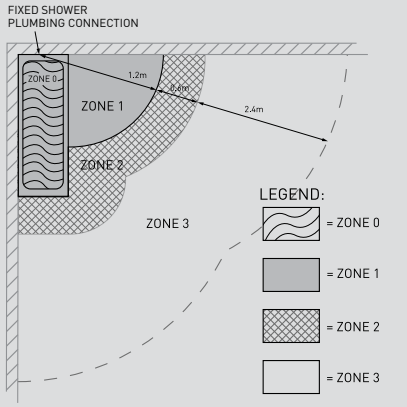

The R621D2 shall be installed in accordance with the requirements relating to Section 6 Damp Situation of AS/NZS 3000:2007 Wiring Rules. No part of the unit may be located directly above any part of the bath or shower recess or enclosure. Please refer to diagrams: units must be installed within zones 2 and 3 only.

Exhaust fan correct installation:

1. Unit Orientation: the unit must be installed to ensure the housing outlet and ducting is oriented in parallel to any roofing structures or supports. Any 90° bend in the duct will cause performance reduction.

2. Duct Size: we recommend the unit to be installed with 150mm duct to ensure optimum extraction and performance.

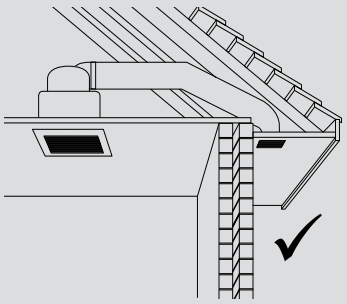

3. Cross Ventilation: Air will only be exhausted if there is sufficient flow through the room. Ensure adequate air inlets exist through windows, vents or under the door.

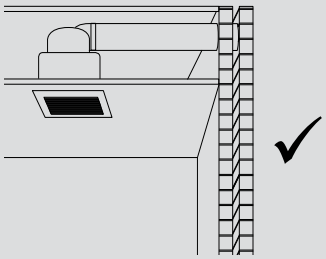

4. Duct Outlet: Airflow will be reduced with pressure differentials between the room and outside air.

The duct outlet must be the same height or lower than the exhaust fan. The duct must not be installed vertically into a roof vent cap.

THE complete range of ventilation solutions

Sweep Fans

STAY COOL

- Quick-fit wiring for super fast installation
- Hang-sure and J-hook models available for level and inclined ceilings
- Australian designed & engineered for guaranteed quality

Exhaust Fans

KEEPING ROOMS FRESH

- Ideal for kitchens, bathrooms and laundries
- Strong air extraction up to 400m³/h
- Models for all rooms sizes available
- Complete offer for walls and ceilings

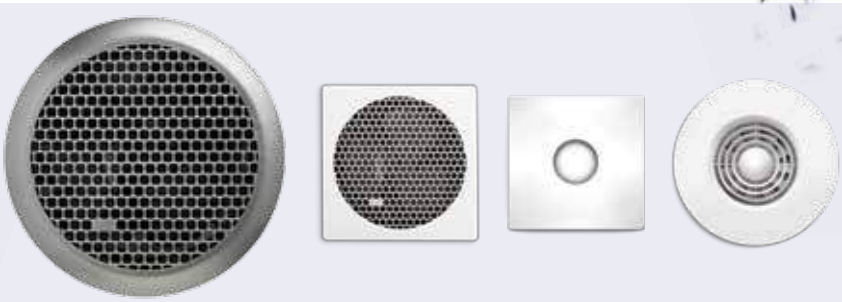

Instant Heat

KEEPING BATHROOMS HEALTHY AND WARM

- Fast installation
- Slimline design
- Strong air extraction
- Energy saving LED centre light options

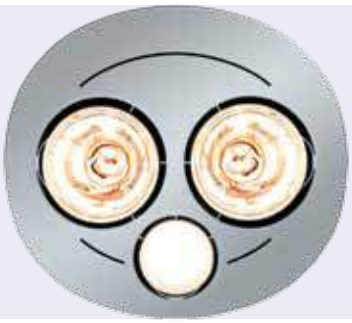

N New product | ECO Energy Saving products | More info available. See technical pages | COMING SOON Coming soon | Product to be discontinued

Whilst most items are stock lines some products are made to order. UoM = Unit Of Measure.
Prices are effective 1 June 2017 and are subject to change without notice. Trade prices exclude GST.

LIGHTING & SENSORS

Fixtures

P. 301
LED Downlights

P. 305
Halogen and CFL Downlights

Lamps

P. 309
LED Lamps PAR38, R80, GU10 and MR16 Lamps

P. 312-313
Fluorescent T5 and T8

P. 317
Halogen MR8, MR11 and MR16 Lamps

Lighting Accessories

P. 320
Fluorescent and Halogen Accessories

Motion Sensors and Smoke Alarms

P. 322
IP44 Weatherproof Sensor

Garden Lighting

P. 324
Garden Lighting 12V d.c.

FEATURED PRODUCTS

Forta Floodlights
(p. 304)

LED PAR38 Lamp
(p. 309)

P. 301
LED
Panel Lights

P. 303
LED
Wall Lights

P. 303
LED Step Lights
And Starlights

P. 304
LED
Floodlights

P. 306
Incandescent
and Halogen
Floodlights

P. 307
Fluorescent
Battens

P. 308
Fluorescent Wall
Lights, Oyster and
Bunker Lights

P. 308
Coachlights

P. 310
Electrozap
Insect Killer

P. 310
CFL Triple
and Quad Tube

P. 311
CFL Spiral,
Bug and Party

P. 312
CFL
T2

P. 312
CFL
R80

P. 315
Ehalogen
Candle and
Fancy Round

P. 316
Ehalogen
GLS

P. 316
Halogen
G4 Bipin

P. 316
Halogen
G9

P. 317
Halogen
GU10

P. 318
Tungsten
Halogen R75

P. 319
Incandescent
PAR38, R63 and
R80

P. 320
Lampholders

P. 321
Battenholders

P. 321
Ceiling Roses

P. 322
IP66
Weatherproof
Sensor

P. 322
Smoke Alarms

P. 325
Garden Lighting
12V d.c. Accessories

LED R80 Lamp
(p. 309)

Smoke Alarms
(p. 322)

Lighting & sensors

LED Fixtures

DLI7001

DLI9004

LDL044KWE

DLI12502

DLI110TRIWE

DLI903KTILTWE

Cat.Nos	Integrated driver LED dimmable downlights		UoM	Trade price $	GST $	Box qty	Carton qty
	70mm diameter cut-out						
DLI7001	5W DLI 505lm warm white 3000K white 70mm cut-out dim	N ECO IC-4	EA	$38.50	$3.85	-	48
DLI7002	5W DLI 515lm cool white 4000K white 70mm cut-out dim	N ECO IC-4	EA	$38.50	$3.85	-	48
DLI7003	5W DLI 505lm warm white 3000K chrome 70mm cut-out dim	N ECO IC-4	EA	$39.90	$3.99	-	48
DLI7004	5W DLI 515lm cool white 4000K chrome 70mm cut-out dim	N ECO IC-4	EA	$39.90	$3.99	-	48
DLI70014P	4 Pack 5W DLI 505lm warm white 3000K white 70mm cut-out dim	N ECO IC-4	EA	$119.90	$11.99	4	36
	90mm diameter cut-out						
DLI9001	7W DLI 700lm warm white 3000K white 90mm cut-out dim	N ECO IC-4	EA	$38.50	$3.85	-	24
DLI9002	7W DLI 820lm cool white 4000K white 90mm cut-out dim	N ECO IC-4	EA	$38.50	$3.85	-	24
DLI9003	7W DLI 700lm warm white 3000K chrome 90mm cut-out dim	N ECO IC-4	EA	$39.90	$3.99	-	24
DLI9004	7W DLI 820lm cool white 4000K white 90mm cut-out dim	N ECO IC-4	EA	$39.90	$3.99	-	24
DLI90014P	4 Pack 7W DLI 700lm warm white 3000K white 90mm cut-out dim	N ECO IC-4	EA	$129.90	$12.99	4	24
LDL043KWE	8W AZA+ 750lm warm white 3000K white 90mm cut-out dim	N ECO IC-4	EA	$38.50	$3.85	-	20
LDL044KWE	8W AZA+ 820lm cool white 3000K white 90mm cut-out dim	N ECO IC-4	EA	$38.50	$3.85	-	20
LDL043KPS	8W AZA+ 750lm warm white 3000K polished silver 90mm cut-out	N ECO IC-4	EA	$39.90	$3.99	-	-
LDL044KPS	8W AZA+ 750lm cool white 3000K polished silver 90mm cut-out	N ECO IC-4	EA	$39.90	$3.99	-	-
	125mm diameter cut-out						
DLI12501	7W DLI 750lm warm white 3000K white 125mm cut-out dim	N ECO IC-4	EA	$43.87	$4.39	-	24
DLI12502	7W DLI 880lm cool white 4000K white 125mm cut-out dim	N ECO IC-4	EA	$43.87	$4.39	-	24
	Selectable colour temperature - Integrated driver LED dimmable downlights						
DLI90TRIWE	7W DLI 690-740-680lm selectable 3000K/4000K/5000K white Ø90mm cut-out dim	N ECO IC-4	EA	$41.90	$4.19	-	-
DLI110TRIWE	7W DLI 690-740-680lm selectable 3000K/4000K/5000K white Ø110mm cut-out dim	N ECO IC-4	EA	$43.90	$4.39	-	-
DLI150TRIWE	10W DLI 1000-1100-1000lm selectable 3000K/4000K/5000K white Ø150mm	N ECO IC-4	EA	$45.90	$4.59	-	-
	Tilt decorative - Integrated driver LED dimmable downlights						
DLI903KTILTWE	7W DLI 700lm tilt decorative warm white 3000K chrome 90mm cut-out dim	N ECO IC-4	EA	$41.90	$4.19	-	-
DLI904KTILTWE	7W DLI 820lm tilt decorative cool white 4000K chrome 90mm cut-out dim	N ECO IC-4	EA	$41.90	$4.19	-	-

Insulation Contact (IC) recessed luminaire - building insulation that can be continuously exposed to 90°C, can safely abut and cover the luminaire

Insulation Contact - Fire Resistant (IC-F) recessed luminaire - building insulation that can be continuously exposed to 90°C can safely abut and cover the luminaire. Additionally, IC-F rated downlights have to pass a 1mm probe test i.e. a 1mm diameter probe cannot enter any part of the luminaire and in effect no insulation or any other material can enter the fitting.

N New product | ECO Energy Saving products | More info available. See technical pages | COMING SOON Coming soon | Product to be discontinued

Whilst most items are stock lines some products are made to order. UoM = Unit Of Measure.
Prices are effective 1 June 2017 and are subject to change without notice. Trade prices exclude GST.

Lighting & sensors

LED Fixtures

LDL033KWE

DLS9003

LDL013KWE

LDL023KWE

LDL024KPS

LPA013KWE

Cat.Nos	External driver LED dimmable downlights	UoM	Trade price $	GST $	Box qty	Carton qty
	70mm diameter cut-out					
LDL033KWE	7W FREESIA 600lm warm white 3000K white 70mm cut-out dim ECO IC-4	EA	$50.67	$5.07	-	20
LDL034KWE	7W FREESIA 620lm cool white 4000K white 70mm cut-out dim ECO IC-4	EA	$50.67	$5.07	-	20
LDL033KPS	7W FREESIA 600lm warm white 3000K polished aluminium 70mm cut-out dim ECO IC-4	EA	$50.67	$5.07	-	20
LDL034KPS	7W FREESIA 620lm cool white 4000K polished aluminium 70mm cut-out dim ECO IC-4	EA	$50.67	$5.07	-	20
	90mm diameter cut-out					
DLS9001	10W DLS 800lm warm white 3000K white 90mm cut-out dim ECO IC	EA	$50.67	$5.07	-	24
DLS9002	10W DLS 830lm cool white 4000K white 90mm cut-out dim ECO IC	EA	$50.67	$5.07	-	24
DLS9003	10W DLS 800lm warm white 3000K brushed chrome 90mm cut-out dim ECO IC	EA	$50.67	$5.07	-	24
DLS9004	10W DLS 830lm cool white 4000K brushed chrome 90mm cut-out dim ECO IC	EA	$50.67	$5.07	-	24
LDL013KWE	11W AZALEA 880lm warm white 3000K white 90mm cut-out dim ECO IC-4	EA	$50.67	$5.07	-	20
LDL014KWE	11W AZALEA 890lm cool white 4000K white 90mm cut-out dim ECO IC-4	EA	$50.67	$5.07	-	20
LDL013KPS	11W AZALEA 880lm warm white 3000K polished aluminium 90mm cut-out dim ECO IC-4	EA	$50.67	$5.07	-	20
LDL014KPS	11W AZALEA 890lm cool white 4000K polished aluminium 90mm cut-out dim ECO IC-4	EA	$50.67	$5.07	-	20
LDL023KWE	15W DALIA 950lm warm white 3000K white 90mm cut-out dim ECO IC	EA	$83.01	$8.30	-	20
LDL024KWE	15W DALIA 980lm cool white 4000K white 90mm cut-out dim ECO IC	EA	$83.01	$8.30	-	20
LDL023KPS	15W DALIA 950lm warm white 3000K anodised aluminium 90mm cut-out dim ECO IC	EA	$83.01	$8.30	-	20
LDL024KPS	15W DALIA 980lm cool white 4000K anodised aluminium 90mm cut-out dim ECO IC	EA	$83.01	$8.30	-	20
	Downlights extension plates					
LEP120WE	For holes up to Ø120mm for 90mm cut-out downlights N	EA	$14.49	$1.45	12	96
LEP150WE	For holes up to Ø150mm for 90mm cut-out downlights N	EA	$16.29	$1.63	12	96
	LED panel lights					
LPA013KWE	18W LUNA 1440lm warm white 3000K white finish 225mm cut-out dim N ECO	EA	$110.08	$11.01	-	10
LPA014KWE	18W LUNA 1500lm cool white 4000K white finish 225mm cut-out dim N ECO	EA	$110.08	$11.01	-	10
	MR16 Retrofit LED					
LMR16703KWE	7W 550lm LED retrofit for MR16 halogen Ø70mm cut-out N	EA	$39.90	$3.99	16	64
LMR16704KWE	7W 590lm LED retrofit for MR16 halogen Ø70mm cut-out N	EA	$39.90	$3.99	16	64
LMR16903KWE	9W 710lm LED retrofit for MR16 halogen Ø90mm cut-out N	EA	$40.90	$4.09	12	48
LMR16904KWE	9W 770lm LED retrofit for MR16 halogen Ø90mm cut-out N	EA	$40.90	$4.09	12	48

Insulation Contact (IC) recessed luminaire - building insulation that can be continuously exposed to 90°C, can safely abut and cover the luminaire

Insulation Contact - Fire Resistant (IC-F) recessed luminaire - building insulation that can be continuously exposed to 90°C can safely abut and cover the luminaire. Additionally, IC-F rated downlights have to pass a 1mm probe test i.e. a 1mm diameter probe cannot enter any part of the luminaire and in effect no insulation or any other material can enter the fitting.

N New product | ECO Energy Saving products | More info available. See technical pages | Coming soon | Product to be discontinued

Whilst most items are stock lines some products are made to order. UoM = Unit Of Measure.
Prices are effective 1 June 2017 and are subject to change without notice. Trade prices exclude GST.

Dimmer Compatibility

Led Fixture Range	Dimmer Type	Dimmers Compatibility	Maximum Lights Per Dimmer	Dimming Range
DLI70 Downlights	Trailing edge only	400A3P	16	100%-1%
		400A2P	16	89%-7%
		250T	11	100%-7%
		400T	16	94%-8%
		700T	28	100%-15%
		1000T	40	100%-18%
AZA+ Downlights DLI90 & DLI125 Downlights	Trailing edge only	400A3P	12	100%-1%
		400A2P	12	97%-9%
		250T	8	100%-7%
		400T	12	100%-7%
		700T	21	100%-13%
		1000T	30	100%-16%
Dalia Downlights Azalea Downlights Freesia Downlights Luna Panel Lights Calla Step Lights Zinnia Starlights	Trailing edge & leading edge	400A3P	8	100%-5%
		400A2P	8	100%-10%
		250T / 250L	5	100%-10%
		400T / 400L	8	100%-10%
		700T / 700L	14	100%-25%
		1000T / 1000L	20	100%-25%
DLS Downlights	Trailing edge only	400A3P	8	100%-10%
		400A2P	8	100%-10%
		250T	5	100%-10%
		400T	8	100%-10%
		700T	14	100%-25%
		1000T	20	100%-25%
R80 Dimmable Globe	Trailing edge only	400A3P	12	100%-1%
		400A2P	12	92%-10%
		250T	8	100%-7%
		400T	12	100%-8%

MR16 Retrofit

Install it yourself in 3 easy steps.

1. Remove.
Unplug and remove existing MR16 halogen downlight.

2. Replace.
Plug-in your new HPM MR16 LED downlight and install back into ceiling.

3. Ready.
Enjoy great light output, sleek design and up to 80% energy saving.

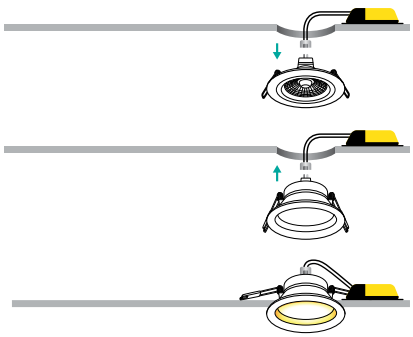

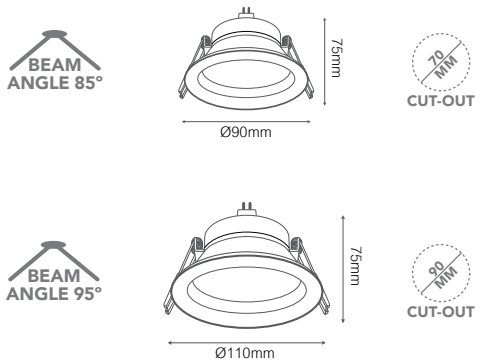

N New product | ECO Energy Saving products | More info available. See technical pages | COMING SOON Coming soon | Product to be discontinued

Whilst most items are stock lines some products are made to order. UoM = Unit Of Measure.
Prices are effective 1 June 2017 and are subject to change without notice. Trade prices exclude GST.

Lighting & sensors

LED Fixtures

LOL013KWE

LOL024KPS

LST013KPS

LWL013KPS

LPD013KBL

LPD023KWE

LPD033KPS

Cat.Nos	LED oysters lights		UoM	Trade price $	GST $	Box qty	Carton qty
LOL013KWE	17W ATIS 1650lm warm white 3000K white dimmable	N ECO	EA	$88.57	$8.86	-	6
LOL014KWE	17W ATIS 1750lm cool white 4000K white dimmable	N ECO	EA	$88.57	$8.86	-	6
LOL023KPS	18W AURA 1520lm warm white 3000K silver dimmable	N ECO	EA	$119.83	$11.98	-	4
LOL024KPS	18W AURA 1530lm cool white 4000K silver dimmable	N ECO	EA	$119.83	$11.98	-	4
	LED step lights						
LST013KWE	2.4W CALLA 24lm warm white 3000K white 45mm cut-out	ECO IC	EA	$60.65	$6.06	-	100
LST013KPS	2.4W CALLA 24lm warm white 3000K silver 45mm cut-out	ECO IC	EA	$60.65	$6.06	-	100
	LED star lights						
LST023KWE	2.4W ZINNIA 95lm warm white 3000K white finish 32mm cut-out dimmable	ECO IC	EA	$53.36	$5.34	-	100
LST023KPS	2.4W ZINNIA 95lm warm white 3000K polished aluminium 32mm cut-out dimmable	ECO IC	EA	$53.36	$5.34	-	100
LDR02D700/18	18W driver kit for ZINNIA/CALLA LED step lights & starlights (minimum load: 5W)	ECO	EA	$55.04	$5.50	-	50
	LED striplights						
LDR01N700/36	36W RIBBA driver and 1m strip 600lm warm white 3000K up to 5m strip	ECO	EA	$71.89	$7.19	-	24
LSL013K	7W RIBBA 600lm strip warm white 3000K 1m length	ECO	EA	$30.33	$3.03	-	24
	LED wall lights						
LWL013KPS	10W PINNA up/downlight 380lm warm white 3000K anodised aluminium IP54	ECO	EA	$137.04	$13.70	-	24
LWL023KPS	7.5W KYRA up/downlight 430lm warm white 3000K anodised aluminium IP54	ECO	EA	$177.47	$17.75	-	24
LWL033KWE	7.5W DIAMA up/downlight 520lm warm white 3000K white indoor	ECO	EA	$177.47	$17.75	-	12
LWL053KWE	8.3W KORA up/downlight 335lm warm white 3000K white indoor	N ECO	EA	$162.88	$16.29	-	24
LWL063KPS	7W MIKA up/downlight 350lm warm white 3000K anodised aluminium IP54	N ECO	EA	$177.47	$17.75	-	12
	LED pendant lights						
LPD013KBL	7W CYLLA pendant 560lm warm white 3000K die-cast aluminium black	N ECO	EA	$159.00	$15.90	-	12
LPD013KPS	7W CYLLA pendant 560lm warm white 3000K die-cast aluminium silver	N ECO	EA	$159.00	$15.90	-	12
LPD013KWE	7W CYLLA pendant 560lm warm white 3000K die-cast aluminium white	N ECO	EA	$159.00	$15.90	-	12
LPD023KWE	8W CERSI pendant 8W CERSI pendant 570lm warm white 3000K die-cast aluminium white	N ECO	EA	$162.00	$16.20	-	6
LPD033KPS	8W PENDI pendant 8W CERSI pendant 320lm warm white 3000K die-cast aluminium silver	N ECO	EA	$190.00	$19.00	-	6

Insulation Contact (IC) recessed luminaire - building insulation that can be continuously exposed to 90°C, can safely abut and cover the luminaire

Insulation Contact - Fire Resistant (IC-F) recessed luminaire - building insulation that can be continuously exposed to 90°C can safely abut and cover the luminaire. Additionally, IC-F rated downlights have to pass a 1mm probe test i.e. a 1mm diameter probe cannot enter any part of the luminaire and in effect no insulation or any other material can enter the fitting.

N New product | ECO Energy Saving products | More info available. See technical pages | Coming soon | Product to be discontinued

Whilst most items are stock lines some products are made to order. UoM = Unit Of Measure.
Prices are effective 1 June 2017 and are subject to change without notice. Trade prices exclude GST.

Lighting & sensors

LED Fixtures

LBL014KWE

LFS0316WBL

LFS0130WBL

LSS0112WBL

LWK0130WBL

LWK0240WBL

Cat.Nos	LED bunker light		UoM	Trade price $	GST $	Box qty	Carton qty
LBL014KWE	12W OROYA 870lm cool white 4000K white Ø270mm IP65	N ECO	EA	$110.45	$11.04	-	-
	LED floodlights						
LFS013KBL	28W 2200lm Twin PAR38 with PIR sensor warm white 3000K IP44 black	N ECO	EA	$109.11	$10.91	-	10
LSS0209WBL	9W 990lm MAXIS with PIR sensor cool white 4000K IP44 black	N ECO	EA	$82.32	$8.23	-	8
LFL0213WBL	13W 1100lm BAKRA cool white 4000K IP44 black	N ECO	EA	$82.32	$8.23	-	10
LFS0214WBL	14W 1100lm BAKRA with PIR sensor cool white 4000K IP44 black	N ECO	EA	$113.58	$11.36	-	6
LFS0316WBL	16W 1700lm TORAN with PIR sensor cool white 4000K IP44 black	N ECO	EA	$130.25	$13.02	-	4
LFL0110WBL	10W 730lm FORTA cool white 4000K IP44 black	N ECO	EA	$61.67	$6.17	-	12
LFL0120WBL	20W 1615lm FORTA cool white 4000K IP44 black	N ECO	EA	$100.98	$10.10	-	6
LFL0130WBL	30W 2250lm FORTA cool white 4000K IP44 black	N ECO	EA	$151.53	$15.15	-	4
LFL0140WBL	40W 3000lm FORTA cool white 4000K IP44 black	N ECO	EA	$179.61	$17.96	-	4
LFS0110WBL	10W 730lm FORTA with PIR sensor cool white 4000K IP44 black	N ECO	EA	$72.94	$7.29	-	12
LFS0130WBL	30W 2250lm FORTA with PIR sensor cool white 4000K IP44 black	N ECO	EA	$129.21	$12.92	-	2
LSP0112WBL	12W 1070lm SIKA cool white 4000K IP44 black	N ECO	EA	$77.11	$7.71	-	6
LSP0125WBL	25W 2200lm SIKA cool white 4000K IP44 black	N ECO	EA	$122.96	$12.30	-	6
LSS0112WBL	12W 1070lm SIKA with PIR sensor cool white 4000K IP44 black	N ECO	EA	$97.95	$9.80	-	6
LSS0125WBL	25W 2200lm SIKA with PIR sensor cool white 4000K IP44 black	N ECO	EA	$144.84	$14.48	-	6
	LED worklights						
	Portable						
LWK0110WBL	10W 730lm FORTA cool white 4000K IP44 black	N ECO	EA	$71.90	$7.19	-	8
LWK0120WBL	20W 1615lm FORTA cool white 4000K IP44 black	N ECO	EA	$103.16	$10.32	-	8
LWK0130WBL	30W 2250lm FORTA cool white 4000K IP44 black	N ECO	EA	$134.42	$13.44	-	4
	Tripod						
LWK0220WBL	2x10W 1460lm FORTA cool white 4000K IP44 black	N ECO	EA	$181.31	$18.13	-	2
LWK0240WBL	2x20W 3230lm FORTA cool white 4000K IP44 black	N ECO	EA	$243.83	$24.38	-	2

N New product | ECO Energy Saving products | More info available. See technical pages | COMING SOON Coming soon | Product to be discontinued

Whilst most items are stock lines some products are made to order. UoM = Unit Of Measure.
Prices are effective 1 June 2017 and are subject to change without notice. Trade prices exclude GST.

Lighting & sensors

Fixtures

MALC515

MALC515BCMCKT

MGU317WHMCK

Cat.Nos	Halogen downlights - Nelson*	UoM	Trade price $	GST $	Box qty	Carton qty
	MR16 fixed					
MALC317	35W white 70mm cut-out no lamp	EA	$11.65	$1.16	-	60
MALC317BC	35W brushed chrome 70mm cut-out no lamp	EA	$12.49	$1.25	-	60
MK317WH35	35W white 70mm cut-out	EA	$20.21	$2.02	-	50
MK317BC35	35W brushed chrome 70mm cut-out	EA	$22.76	$2.28	-	50
MALC317BCMC	35W brushed chrome 70mm cut-out with mesh cover	EA	$32.86	$3.29	-	24
	MR16 Gimble					
MALC515	35W white 90mm cut-out no lamp	EA	$14.54	$1.45	-	60
MALC515BC	35W brushed chrome 90mm cut-out no lamp	EA	$17.12	$1.71	-	60
MK515WH35	35W white 90mm cut-out	EA	$22.76	$2.28	-	50
MK515BC35	35W brushed chrome 90mm cut-out	EA	$25.28	$2.53	-	50
MALC515WHMC	35W white 90mm cut-out with mesh cover	EA	$32.86	$3.29	-	24
	GU10 fixed					
MGU317WHMCK	50W white 70mm cut-out with mesh cover	EA	$22.53	$2.25	-	24
MGU317BCMCK	50W brushed chrome 70mm cut-out with mesh cover	EA	$25.28	$2.53	-	24
MGU317WHMCKT	50W white 70mm cut-out with mesh cover 10 pack	EA	$204.74	$20.47	-	4
MGU317BCMCKT	50W brushed chrome 70mm cut-out with mesh cover 10 pack	EA	$227.50	$22.75	-	4
	GU10 Gimble					
MGU515WHMCK	50W white 90mm cut-out with mesh cover	EA	$25.28	$2.53	-	24
MGU515BCMCK	50W brushed chrome 90mm cut-out with mesh cover	EA	$27.80	$2.78	-	24
MGU515BCMCKT	50W brushed chrome 90mm cut-out with mesh cover 10 pack	EA	$250.25	$25.02	-	4
	Halogen downlights with movement sensor					
MPES700K35	35W MR16 white 100mm cut-out	EA	$148.56	$14.86	-	10
MPES701	50W GU10 white 100mm cut-out	EA	$85.18	$8.52	-	20

*For halogen downlight accessories see page 320.

Lighting & sensors

Fixtures

MALC113

MPES69BVP

R605/3

R605/5

MPES39G9

Cat.Nos	CFL downlights - Nelson	UoM	Trade price $	GST $	Box qty	Carton qty
MALC6WH	15W cool white 4000K white 110mm cut-out dimmable	EA	$54.81	$5.48	-	30
MALC7WH	20W cool white 4000K white 130mm cut-out dimmable	EA	$60.80	$6.08	-	30
	Outdoor floodlights					
	Incandescent floodlights					
MP38PERMF	150W single floodlight PAR38 IP44 black	EA	$27.32	$2.73	-	16
MP38CL	150W single portable floodlight PAR38 with clamp IP44 black	EA	$32.44	$3.24	-	20
MP38PF	150W single floodlight PAR38 with flex & plug IP44 black	EA	$30.01	$3.00	-	16
MALC113	Twin floodlight PAR38 IP44 black lamps not supplied	EA	$37.29	$3.73	-	20
MPES69	Twin floodlight PAR38 with PIR sensor manual override IP44 lamps not supplied black	EA	$69.04	$6.90	-	20
MPES69BVP	300W twin floodlight PAR38 with PIR sensor manual override IP44 black	EA	$68.31	$6.83	-	8
MALC113VP	300W twin floodlight PAR38 IP44 black	EA	$36.15	$3.62	-	10
MPES69DIY	DIY twin floodlight PAR38 with PIR sensor manual override IP44 lamps not supplied black	EA	$67.32	$6.73	-	20
MPES69BWP	Twin floodlight PAR38 with PIR sensor manual override IP65 lamps not supplied black	EA	$69.70	$6.97	-	20
MPES69WWP	Twin floodlight PAR38 with PIR sensor manual override IP65 lamps not supplied white	EA	$82.85	$8.28	-	20
	Incandescent floodlights - Nelson					
MPES39B	150W PIR wall manual override 180° scan 12m range IP44 black	EA	$43.14	$4.31	-	20
MPES39BWP	150W PIR wall manual override 180° scan 12m range IP44 black	EA	$72.49	$7.25	-	20
	Halogen floodlights					
R605/3	150W floodlight IP44 white	EA	$42.16	$4.22	-	20
R605/4	500W floodlight IP44 silver	EA	$57.05	$5.70	-	12
R605/5	150W floodlight with PIR sensor manual override IP44 white	EA	$87.06	$8.71	-	6
R605/6	500W floodlight with PIR sensor manual override IP44 white	EA	$104.44	$10.44	-	6
	Halogen floodlights - Nelson					
MPES39G9	100W motion sensor PIR black IP44 wall manual override 180° scan 12m range	EA	$76.81	$7.68	-	16
MALC113G9	200W Twin G9 floodlight IP44 black	EA	$56.94	$5.69	-	20
MALC113G9SI	200W Twin G9 floodlight IP44 silver	EA	$56.94	$5.69	-	16
MALC113G9W	200W Twin G9 floodlight IP44 white	EA	$56.94	$5.69	-	16
MPES69G9	200W Twin G9 floodlight with PIR sensor manual override IP44 black	EA	$94.24	$9.42	-	16
MPES69G9SI	200W Twin G9 floodlight with PIR sensor manual override IP44 silver	EA	$94.24	$9.42	-	16
MPES69G9W	200W Twin G9 floodlight with PIR sensor manual override IP44 white	EA	$94.24	$9.42	-	16
NUF400M	400W metal halide floodlight IP65 black	EA	$879.90	$87.99	-	-
MALC115	1500W floodlight heavy duty IP55 black	EA	$189.90	$18.99	-	6

N New product | ECO Energy Saving products | More info available. See technical pages | COMING SOON Coming soon | Product to be discontinued

Whilst most items are stock lines some products are made to order. UoM = Unit Of Measure.
Prices are effective 1 June 2017 and are subject to change without notice. Trade prices exclude GST.

Lighting & sensors

Fixtures

AJ236HT

ASL118H

M5FD228

MT82T51X28

Cat.Nos	Fluorescent battens - Nelson	UoM	Trade price $	GST $	Box qty	Carton qty
	T8					
AJ218HT	Battens T8 Jupitor 2 x 18W natural white 5000K white	EA	$199.53	$19.95	-	-
AJ236HT	Battens T8 Jupitor 2 x 36W natural white 5000K white	EA	$299.28	$29.93	-	-
ASL118H	Battens T8 slimline 18W natural white 5000K aluminium	EA	$162.96	$16.30	-	-
ASL136H	Battens T8 slimline 36W natural white 5000K aluminium	EA	$191.22	$19.12	-	-
	T5					
M5F114	Battens T5 slimline 14W cool white 4000K white	EA	$64.06	$6.41	-	12
M5F128	Battens T5 slimline 28W cool white 4000K white	EA	$101.40	$10.14	-	12
M5F228	Battens T5 slimline 2 x 28W cool white 4000K white	EA	$121.01	$12.10	-	12
M5FD128	Battens T5 slimline 28W cool white 4000K white	EA	$114.51	$11.45	-	8
M5FD214	Battens T5 slimline 2 x 14W cool white 4000K white	EA	$135.70	$13.57	-	6
M5FD228	Battens T5 slimline 2 x 18W cool white 4000K white	EA	$139.87	$13.99	-	6
M5FK228-12	Battens T5 K12 2 x 18W cool white 4000K white	EA	$183.56	$18.36	-	2
NWP4228	Battens T5 WP IP65 2 x 28W natural white 5000K grey	EA	$174.24	$17.42	-	4
ASH108E	Mini-batten T5 silhouette 8W natural white 5000K	EA	$126.38	$12.64	-	-
ASH113EPBS	Mini-batten T5 silhouette 13W natural white 5000K	EA	$142.99	$14.30	-	-
	Accessories					
MT82T51X28	Adaptor T8 to T5 28W warm white 4000K white	EA	$52.40	$5.24	-	30
MSL40C	Clear sleeve for T8 fluorescent tubes 4'-1,200mm	EA	$25.55	$2.56	-	-

N New product | ECO Energy Saving products | More info available. See technical pages | COMING SOON Coming soon | Product to be discontinued

Whilst most items are stock lines some products are made to order. UoM = Unit Of Measure.
Prices are effective 1 June 2017 and are subject to change without notice. Trade prices exclude GST.

Lighting & sensors

Fixtures

AC60BL

MRT5YA22

AODR60SS

MPES40BL

Cat.Nos	Fluorescent wall lights - Nelson	UoM	Trade price $	GST $	Box qty	Carton qty
AC60WH	60W bunker lights Coogee white	EA	$64.83	$6.48	-	-
	Fluorescent oyster lights - Nelson					
MRT5YA22	22W T5 slimline cool white 4000K Ø295mm white	EA	$87.99	$8.80	-	8
AZ22	22W Z series natural white 4300K Ø310mm white	EA	$106.41	$10.64	-	-
MRT5YA32	32W T5 slimline cool white 4000K Ø340mm white	EA	$91.68	$9.17	-	8
MRT5YA32IP	32W IP65 T5 slimline cool white 4000K Ø349mm beige	EA	$143.68	$14.37	-	6
AZSW32T	32W Z series natural white 4300K Ø360mm white	EA	$133.02	$13.30	-	-
MRT5YA40	40W T5 slimline cool white 4000K Ø395mm white	EA	$113.48	$11.35	-	6
AZ40	40W Z series natural white 5000K Ø460mm white	EA	$141.32	$14.13	-	-
MPES760	60W PIR ceiling man. over. 100° scan 7m rg plastic white	EA	$90.42	$9.04	-	6
MPES761	60W PIR ceiling man. over. 100° scan 7m rg plastic white	EA	$90.49	$9.05	-	4
	Fluorescent bunker lights - Nelson					
AODR60BL	60W outdoor round black Ø260mm	EA	$60.73	$6.07	-	10
AODR60SS	60W outdoor round satin silver Ø260mm	EA	$65.07	$6.51	-	10
AODR60WH	60W outdoor round white Ø260mm	EA	$60.73	$6.07	-	10
	Coachlight - Nelson					
MPES40BL	75W PIR IP33 wall manual override 110° scan 12m range black	EA	$68.87	$6.89	-	6
MPES40GR	75W PIR IP33 wall manual override 110° scan 12m range green	EA	$68.87	$6.89	-	6
MPES40WH	75W PIR IP33 wall manual override 110° scan 12m range white	EA	$68.87	$6.89	-	6

N New product | ECO Energy Saving products | More info available. See technical pages | COMING SOON Coming soon | Product to be discontinued

Whilst most items are stock lines some products are made to order. UoM = Unit Of Measure.
Prices are effective 1 June 2017 and are subject to change without notice. Trade prices exclude GST.

Lighting & sensors

LED lamps

LPAR38013K

LR80014K

LR80023K

LED00114

LED00113

LA60013KBC

Cat.Nos	LED A60 dimmable		UoM	Trade price $	GST $	Box qty	Carton qty
LA60023KESD	8W dimmable 875lm warm white 3000K Edison E27	N	EA	$19.80	$1.98	-	-
LA60023KBCD	8W dimmable 875lm warm white 3000K bayonet B22	N	EA	$19.80	$1.98	-	-
	LED A60 non-dimmable						
	Edison E27						
LA60013KES	5W 490lm warm white 3000K	ECO	EA	$14.80	$1.48	10	150
LA60014KES	5W 550lm cool white 4000K	ECO	EA	$14.80	$1.48	10	150
LA60023KES	8W 945lm warm white 3000K	ECO	EA	$17.61	$1.76	10	150
LA60024KES	8W 1035lm cool white 4000K	ECO	EA	$17.61	$1.76	10	150
	Bayonet B22						
LA60013KBC	5W 490lm warm white 3000K	ECO	EA	$14.80	$1.48	10	150
LA60014KBC	5W 550lm cool white 4000K	ECO	EA	$14.80	$1.48	10	150
LA60023KBC	8W 945lm warm white 3000K	ECO	EA	$17.61	$1.76	10	150
LA60024KBC	8W 1035lm cool white 4000K	ECO	EA	$17.61	$1.76	10	150
	LED A60 filament non-dimmable						
LA6001FILES	3.7W 500lm warm white 3000K Edison E27	N	EA	$16.15	$1.62	-	-
LA6001FILBC	3.7W 500lm warm white 3000K bayonet B22	N	EA	$16.15	$1.62	-	-
	LED A60 Insect						
LA6001BUGES	5W 460lm yellow light Edison E27	N	EA	$26.05	$2.60	-	-
LA6001BUGBC	5W 460lm yellow light bayonet B22	N	EA	$26.05	$2.60	-	-
	LED PAR38						
LPAR38013K	14W E27 1100lm warm white 3000K	ECO	EA	$40.89	$4.09	-	12
	LED R80						
LR80014K	7W E27 600lm cool white 4000K short neck for instant heat units	ECO	EA	$35.43	$3.54	12	108
LR80023K	7W E27 580lm warm white 3000K	ECO	EA	$29.07	$2.91	10	60
LR80024K	7W E27 700lm cool white 4000K	ECO	EA	$29.07	$2.91	10	60
	LED GU10						
LGU10013K	GU10 5W 460lm (warm)		EA	$11.98	$1.20	10	100
LGU10014K	GU10 5W 500lm (warm)		EA	$11.98	$1.20	10	100

N New product | ECO Energy Saving products | More info available. See technical pages | COMING SOON Coming soon | Product to be discontinued

Whilst most items are stock lines some products are made to order. UoM = Unit Of Measure.
Prices are effective 1 June 2017 and are subject to change without notice. Trade prices exclude GST.

Lighting & sensors

Insect killer and CFL lamps

MBIK40

MELTG9BC

MELTG11ES

MELQAL11ES

Cat.Nos	Electrozap insect killer - Nelson	UoM	Trade price $	GST $	Box qty	Carton qty
MBIK40	Insect killer Electrozap fluorescent 40W white	EA	$718.24	$71.82	-	-
IZBRA	Pair of wall brackets for Electrozap fixtures	EA	$32.56	$3.26	-	-
IZSPM	Sticky pad for Electrozap fixtures	EA	$16.31	$1.63	-	-
IZTRAY	Catch tray for Electrozap fixtures	EA	$42.76	$4.28	-	-
	CFL triple tube - Nelson					
	Edison E14					
MELTG9SES	9W E14 warm white 3000K 6000h	EA	$11.57	$1.16	-	50
	Edison E27					
MELTG9ES	9W E27 warm white 3000K 6000h	EA	$11.57	$1.16	-	50
MELTG9ESN	9W E27 natural white 5000K 6000h	EA	$11.57	$1.16	-	50
MELTG11ES	11W E27 warm white 3000K 6000h	EA	$11.57	$1.16	-	50
MELTG11ESN	11W E27 natural white 5000K 6000h	EA	$11.57	$1.16	-	50
MELTG15ES	15W E27 warm white 3000K 6000h	EA	$11.57	$1.16	-	50
MELTG15ESN	15W E27 natural white 5000K 6000h	EA	$11.57	$1.16	-	50
MELT28ESNS	28W E27 natural white 5000K 6000h	EA	$29.54	$2.95	10	50
	Bayonet B22					
MELTG9BC	9W B22 warm white 3000K 6000h	EA	$11.57	$1.16	-	50
MELTG9BCN	9W B22 natural white 5000K 6000h	EA	$11.57	$1.16	-	50
MELTG11BC	11W B22 warm white 3000K 6000h	EA	$11.57	$1.16	-	50
MELTG11BCN	11W B22 natural white 5000K 6000h	EA	$11.57	$1.16	-	50
MELTG15BC	15W B22 warm white 3000K 6000h	EA	$11.57	$1.16	-	50
MELTG15BCN	15W B22 natural white 5000K 6000h	EA	$11.57	$1.16	-	50
	CFL quad tube - Nelson					
	Edison E27					
MELQAL11ES	11W E27 warm white 3000K 6000h	EA	$15.19	$1.52	-	50
MELQAL11ESN	11W E27 natural white 5000K 6000h	EA	$15.19	$1.52	-	50
MELQAL15ES	15W E27 warm white 3000K 6000h	EA	$15.95	$1.60	-	50
MELQAL15ESN	15W E27 natural white 5000K 6000h	EA	$15.95	$1.60	-	50
MELQAL20ES	20W E27 warm white 3000K 6000h	EA	$16.46	$1.65	20	100
MELQAL20ESN	20W E27 natural white 5000K 6000h	EA	$16.46	$1.65	20	100
MELQ48ESNS	48W E27 natural white 5000K 6000h	EA	$57.45	$5.74	-	25

N New product | ECO Energy Saving products | More info available. See technical pages | COMING SOON Coming soon | Product to be discontinued

Whilst most items are stock lines some products are made to order. UoM = Unit Of Measure.
Prices are effective 1 June 2017 and are subject to change without notice. Trade prices exclude GST.

Lighting & sensors

CFL lamps

MELQAL11BC

MELSD20ESN

MELTS20BCNS

MELSBUG20ES

MELS20BLKES

Cat.Nos	CFL quad tube - Nelson	UoM	Trade price $	GST $	Box qty	Carton qty
	Bayonet B22					
MELQAL11BC	11W B22 warm white 3000K 6000h	EA	$15.19	$1.52	-	50
MELQAL11BCN	11W B22 natural white 5000K 6000h	EA	$15.19	$1.52	-	50
MELQAL15BC	15W B22 warm white 3000K 6000h	EA	$15.95	$1.60	-	50
MELQAL15BCN	15W B22 natural white 5000K 6000h	EA	$15.95	$1.60	-	50
MELQAL20BCN	20W B22 natural white 5000K 6000h	EA	$16.46	$1.65	20	100
MELQ48BCNS	48W B22 natural white 5000K 6000h	EA	$57.45	$5.74	-	25
	CFL spiral - Nelson					
	Edison E27					
MELSD15ES	15W E27 warm white 3000K dimmable	EA	$20.78	$2.08	20	100
MELSD20ES	20W E27 warm white 3000K 10000h dimmable	EA	$23.10	$2.31	20	100
MELSD20ESN	20W E27 natural white 5000K 10000h dimmable	EA	$23.10	$2.31	20	100
MELTS20ESNS	20W E27 natural white 5000K 6000h spherical	EA	$31.13	$3.11	-	20
MELTS20ESS	20W E27 warm white 3000K 6000h spherical	EA	$31.13	$3.11	-	20
MELS105GESCW	105W E27 cool white 4000K 6000h	EA	$93.53	$9.35	-	10
	Bayonet B22					
MELTS20BCS	20W B22 warm white 3000K 6000h	EA	$31.13	$3.11	-	20
MELTS20BCNS	20W B22 natural white 5000K 6000h	EA	$31.13	$3.11	-	20
MELSD20BC	20W B22 warm white 3000K 10000h dimmable	EA	$23.10	$2.31	20	100
	CFL anti insect - Nelson					
MELSBUG20ES	20W E27 yellow 5000K 6000h	EA	$30.21	$3.02	-	25
MELSBUG20BC	20W B22 yellow 5000K 6000h	EA	$30.21	$3.02	-	25
	CFL party light ultra violet - Nelson					
MELS20BLKES	20W E27 black ultra violet 5000K 6000h	EA	$30.21	$3.02	4	40
MELS20BLKBC	20W B22 black ultra violet 5000K 6000h	EA	$30.21	$3.02	4	40

N New product | ECO Energy Saving products | More info available. See technical pages | COMING SOON Coming soon | Product to be discontinued

Whilst most items are stock lines some products are made to order. UoM = Unit Of Measure.
Prices are effective 1 June 2017 and are subject to change without notice. Trade prices exclude GST.

Lighting & sensors

CFL and fluorescent T5 lamps

MELTR8011ESF

MELMR11ESNS

M5R22CC

M5T14CC

Cat.Nos	CFL T2 - Nelson	UoM	Trade price $	GST $	Box qty	Carton qty
	Edison E27					
MELST211ESN	11W E27 natural white 5000K 8000h twister tube	EA	$9.47	$0.95	-	100
MELST215ES	15W E27 warm white 3000K 8000h twister tube	EA	$11.52	$1.15	20	100
MELST215ESN	15W E27 natural white 5000K 8000h twister tube	EA	$11.52	$1.15	20	100
	Bayonet B22					
MELST215BC	15W B22 warm white 3000K 8000h twister tube	EA	$11.52	$1.15	20	100
MELST215BCN	15W B22 natural white 5000K 8000h twister tube	EA	$11.52	$1.15	20	100
	CFL R80 - Nelson					
MELMR11ESNS	11W E27 natural white 5000K 6000h	EA	$22.11	$2.21	-	50
	Fluorescent T5 lamps - Nelson					
	Straight					
M5T14CC	14W cool white 4000K 549mm 12000h	EA	$19.68	$1.97	-	50
M5T14LC	14W warm white 3000K 549mm 12000h	EA	$19.68	$1.97	-	50
M5T14NC	14W natural white 5000K 549mm 12000h	EA	$19.68	$1.97	-	50
M5T21CC	21W cool white 4000K 549mm 12000h	EA	$19.68	$1.97	-	50
M5T28CC	28W cool white 4000K 549mm 20000h	EA	$22.09	$2.21	-	50
M5T28NC	28W natural white 5000K 549mm 20000h	EA	$22.09	$2.21	-	50
M5T28D	28W daylight white 6700K 549mm 20000h	EA	$22.09	$2.21	-	50
M5T35NC	35W natural white 5000K 549mm 20000h	EA	$28.11	$2.81	-	25
	Circular					
M5R22CC	22W cool white 4000K Ø180mm 16000h	EA	$18.12	$1.81	-	40
M5R22LC	22W warm white 3000K Ø180mm 16000h	EA	$18.12	$1.81	-	40
M5R22NC	22W natural white 5000K Ø180mm 16000h	EA	$18.12	$1.81	-	40
M5R32CC	32W cool white 4000K Ø180mm 16000h	EA	$27.17	$2.72	-	20
M5R32NC	32W natural white 5000K Ø180mm 16000h	EA	$27.36	$2.74	-	20
M5R40CC	40W cool white 4000K Ø180mm 16000h	EA	$32.63	$3.26	-	30
M5R40NC	40W natural white 5000K Ø180mm 16000h	EA	$32.63	$3.26	-	30

N New product | ECO Energy Saving products | More info available. See technical pages | COMING SOON Coming soon | Product to be discontinued

Whilst most items are stock lines some products are made to order. UoM = Unit Of Measure.
Prices are effective 1 June 2017 and are subject to change without notice. Trade prices exclude GST.

Lighting & sensors

Fluorescent T8 lamps

MF30SSBR-HG

MR32CX

MRN32NX

MR40CX

Cat.Nos	Fluorescent T8 lamps - Nelson/NEC	UoM	Trade price $	GST $	Box qty	Carton qty
	Straight - yellow - Nelson					
MCC18Y	18W yellow 7000h	EA	$17.54	$1.75	-	25
MCC36Y	36W yellow 10000h	EA	$23.37	$2.34	-	25
	Straight - plant/aquarium - NEC					
MF30SSBR-HG	30W plant/aquarium 9000h	EA	$26.10	$2.61	-	25
MF40SSBR-HG	40W plant/aquarium 20000h	EA	$42.27	$4.23	-	25
	Straight - meat/pink - NEC					
MG30HG	30W meat/pink 9000h	EA	$27.22	$2.72	-	25
MG40HG	37W meat/pink 20000h	EA	$32.53	$3.25	-	25
MG58HG	58W meat/pink 20000h	EA	$44.66	$4.47	-	25
	Straight battens - black/insect - NEC					
MI15	15W black/insect 2.1uva 7500h	EA	$16.46	$1.65	25	200
MI20	20W black/insect 5uva 9000h	EA	$20.81	$2.08	-	25
MI40	40W black/insect 8uva 20000h	EA	$36.13	$3.61	-	25
	Straight - blue - NEC					
MJ40	40W blue 7.4uva 20000h	EA	$118.95	$11.90	10	40

	Fluorescent T9 lamps - Nelson/NEC					
	Circular - Nelson					
MRN22	22W natural white 5000K 9000h	EA	$14.50	$1.45	-	20
MRN32	32W natural white 5000K 9000h	EA	$21.58	$2.16	-	20
	Circular - NEC					
MRN22CX	22W cool white 4000K 9000h quad phosphor	EA	$12.76	$1.28	-	12
MR20CX	22W cool white 4200K 9000h quad phosphor	EA	$29.00	$2.90	-	12
MR20X	22W natural white 5000K 9000h quad phosphor	EA	$29.00	$2.90	-	12
MU22	22W daylight white 6500K 9000h	EA	$23.43	$2.34	-	20
MRN32CX	32W cool white 4000K 9000h quad phosphor	EA	$15.38	$1.54	-	12
MR32CSG	32W cool white 4200K 9000h	EA	$37.43	$3.74	-	20
MR32CX	32W cool white 4200K 9000h quad phosphor	EA	$29.93	$2.99	-	12
MR32SG	32W natural white 5000K 9000h	EA	$37.43	$3.74	-	20
MR32X	32W natural white 5000K 9000h quad phosphor	EA	$29.93	$2.99	-	12
MRN32NX	32W natural white 5000K 9000h quad phosphor	EA	$15.38	$1.54	-	12
MR32LX	32W warm white 3000K 9000h quad phosphor	EA	$29.93	$2.99	-	20
MRN32LX	32W warm white 3000K 9000h quad phosphor	EA	$15.38	$1.54	-	12
MR40CX	40W cool white 4200K 9000h quad phosphor	EA	$48.04	$4.80	-	12

N New product | ECO Energy Saving products | More info available. See technical pages | COMING SOON Coming soon | Product to be discontinued

Whilst most items are stock lines some products are made to order. UoM = Unit Of Measure.
Prices are effective 1 June 2017 and are subject to change without notice. Trade prices exclude GST.

Lighting & sensors

Fluorescent T8 lamps

MC10

MT18CX

MT36N

Cat.Nos	Fluorescent T8 lamps	UoM	Trade price $	GST $	Box qty	Carton qty
	Straight - Nelson					
MT18C	18W cool white 4200K 12000h	EA	$6.52	$0.65	-	25
MT18D	18W daylight white 6700K 12000h	EA	$6.52	$0.65	-	25
MT18NX	18W natural white 5000K 9000h	EA	$10.01	$1.00	-	25
MT18LX	18W warm white 3000K 9000h	EA	$10.01	$1.00	-	25
MT36C	36W cool white 4200K 12000h	EA	$8.90	$0.89	-	25
MT36CX	36W cool white quad fluoro	EA	$12.44	$1.24	-	25
MT36D	36W daylight white 6700K 12000h	EA	$8.90	$0.89	-	25
MT36N	36W natural white 5000K 12000h	EA	$8.90	$0.89	-	25
MT36NX	36W natural white 5000K 7500h	EA	$12.44	$1.24	-	25
	Straight - NEC					
MC08	8W cool white 4200K 6000h	EA	$6.92	$0.69	25	250
MC10	10W cool white 4200K 6000h	EA	$8.62	$0.86	25	200
MT10HGX	10W natural white 5000K 7500h	EA	$15.36	$1.54	25	200
MC13	13W cool white 4200K 7500h	EA	$22.66	$2.27	-	25
MT13HG	13W natural white 5000K 7500h	EA	$25.78	$2.58	-	25
MC15	15W cool white 4200K 7500h	EA	$7.89	$0.79	-	25
MT15HGX	15W natural white 5000K 7500h	EA	$17.25	$1.72	25	200
MT18CX	18W cool white 4200K	EA	$10.01	$1.00	-	25
MC18S	18W cool white 4200K 7500h	EA	$8.98	$0.90	-	25
MC18SDM	18W cool white 4200K 9000h medical	EA	$16.62	$1.66	-	25
MT18CHGX	18W cool white 4200K 9000h	EA	$20.79	$2.08	-	25
MT18HG	18W natural white 5000K 9000h	EA	$20.81	$2.08	-	25
MT18HGX	18W natural white 5000K 9000h	EA	$20.79	$2.08	-	25
MC37SDM	37W cool white 4200K 20000h medical	EA	$20.87	$2.09	-	25
MT37CHGX	37W cool white 4200K 20000h	EA	$26.24	$2.62	-	25
MT37DHG	37W daylight white 6500K 20000h	EA	$28.91	$2.89	-	25
MT37DHGSP	37W daylight white 6500K 20000h	EA	$54.77	$5.48	-	25
MT37HG	37W natural white 5000K 20000h	EA	$29.69	$2.97	-	25
MT37HGSP	37W natural white 5000K 20000h	EA	$56.61	$5.66	-	25
MT37HGX	37W natural white 5000K 20000h	EA	$26.24	$2.62	-	25

N New product | ECO Energy Saving products | More info available. See technical pages | COMING SOON Coming soon | Product to be discontinued

Whilst most items are stock lines some products are made to order. UoM = Unit Of Measure.
Prices are effective 1 June 2017 and are subject to change without notice. Trade prices exclude GST.

Lighting & sensors

Fluorescent T8 and ehalogen lamps

MRN40

MNCAN28SESF

MNFRD28SESC

MNG933

MNGU1040

Cat.Nos	Fluorescent T8 lamps - Nelson/NEC	UoM	Trade price $	GST $	Box qty	Carton qty
	Circular - Nelson					
MRN40	40W natural white 5000K 9000h	EA	$25.87	$2.59	-	10
	Circular - NEC					
MR40X	40W natural white 5000K 9000h quad phosphor	EA	$48.04	$4.80	-	12
MRN40CX	40W cool white 4000K 9000h quad phosphor	EA	$27.12	$2.71	-	12
MRN40NX	40W natural white 5000K 9000h quad phosphor	EA	$27.12	$2.71	-	12
	Ehalogen candle - Nelson					
	Edison E14/E27					
MNCAN28SESF	28W E14 frost warm white 2780K	EA	$5.54	$0.55	10	100
MNCAN28ESC	28W E27 clear warm white 2780K	EA	$5.47	$0.55	20	100
MNCAN28ESF	28W E27 frost warm white 2780K	EA	$5.54	$0.55	10	100
MNCAN28SESC	28W E27 clear warm white 2780K	EA	$5.47	$0.55	20	100
	Bayonet B15/B22					
MNCAN28SBCF	28W B15 frost warm white 2780K	EA	$5.54	$0.55	10	100
MNCAN28BCC	28W B22 clear warm white 2780K	EA	$5.47	$0.55	20	100
MNCAN28BCF	28W B22 frost warm white 2780K	EA	$5.54	$0.55	10	100
MNCAN28SBCC	28W B22 clear warm white 2780K	EA	$5.47	$0.55	20	100
	Ehalogen fancy round - Nelson					
	Edison E14/E27					
MNFRD28SESC	28W E14 clear warm white 2780K	EA	$5.47	$0.55	10	100
MNFRD28SESF	28W E14 frost warm white 2780K	EA	$5.54	$0.55	10	100
MNFRD28ESC	28W E27 clear warm white 2780K	EA	$5.47	$0.55	10	100
MNFRD28ESF	28W E27 frost warm white 2780K	EA	$5.54	$0.55	10	100
	Bayonet B15/B22					
MNFRD28SBCC	28W B15 clear warm white 2780K	EA	$5.47	$0.55	10	100
MNFRD28SBCF	28W B15 frost warm white 2780K	EA	$5.54	$0.55	10	100
MNFRD28BCC	28W B22 clear warm white 2780K	EA	$5.47	$0.55	10	100
MNFRD28BCF	28W B22 frost warm white 2780K	EA	$5.54	$0.55	10	100
	Ehalogen G9					
MNG933	33W clear warm white 2780K	EA	$7.60	$0.76	20	100
MNG942	42W clear warm white 2780K	EA	$7.60	$0.76	20	200
	Ehalogen GU10 - Nelson					
MNGU1040	40W clear warm white 2780K	EA	$9.17	$0.92	20	200

N New product | ECO Energy Saving products | More info available. See technical pages | COMING SOON Coming soon | Product to be discontinued

Whilst most items are stock lines some products are made to order. UoM = Unit Of Measure.
Prices are effective 1 June 2017 and are subject to change without notice. Trade prices exclude GST.

Lighting & sensors

Ehalogen and halogen lamps

MNGLS28ESC

MNR6342

MJC20CDP

MAG9100F

Cat.Nos	Ehalogen GLS - Nelson	UoM	Trade price $	GST $	Box qty	Carton qty
	Edison E27					
MNGLS28ESC	28W E27 clear warm white 2780K	EA	$4.62	$0.46	10	100
MNGLS28ESF	28W E27 frost warm white 2780K	EA	$4.69	$0.47	10	100
MNGLS42ESC	42W E27 clear warm white 2780K	EA	$4.62	$0.46	10	100
MNGLS42ESF	42W E27 frost warm white 2780K	EA	$4.69	$0.47	10	100
MNGLS52ESC	52W E27 clear warm white 2780K	EA	$4.62	$0.46	10	100
MNGLS52ESF	52W E27 frost warm white 2780K	EA	$4.69	$0.47	10	100
MNGLS70ESC	70W E27 clear warm white 2780K	EA	$4.62	$0.46	10	100
MNGLS70ESF	70W E27 frost warm white 2780K	EA	$4.69	$0.47	10	100
	Bayonet B22					
MNGLS28BCC	28W B22 clear warm white 2780K	EA	$4.62	$0.46	10	100
MNGLS28BCF	28W B22 frost warm white 2780K	EA	$4.69	$0.47	10	100
MNGLS42BCC	42W B22 clear warm white 2780K	EA	$4.62	$0.46	10	100
MNGLS42BCC2P	42W B22 clear warm white 2780K twin pack	EA	$4.69	$0.47	20	60
MNGLS42BCF	42W B22 frost warm white 2780K	EA	$4.62	$0.46	10	100
MNGLS52BCC	52W B22 clear warm white 2780K	EA	$4.69	$0.47	10	100
MNGLS52BCF	52W B22 frost warm white 2780K	EA	$4.62	$0.46	10	100
MNGLS70BCC	70W B22 clear warm white 2780K	EA	$4.69	$0.47	10	100
MNGLS70BCF	70W B22 frost warm white 2780K	EA	$4.47	$0.45	10	100
	Ehalogen R63 - Nelson					
MNR6342	42W clear warm white 2780K	EA	$6.34	$0.63	10	100
	Halogen G4 Bipin - Nelson					
MJC1035	10W G4 clear warm white 3500K	EA	$8.90	$0.89	20	200
MJC2035	20W G4 clear warm white 3500K	EA	$8.90	$0.89	20	200
MJC20CDP	20W G4 clear warm white 3500K twin pack	EA	$14.50	$1.45	25	250
MJC35CDP	35W G4 clear warm white 3500K twin pack	EA	$14.50	$1.45	25	250
	Halogen G9 lamps dimmable - Nelson					
MAG940C	40W clear warm white 3200K dimmable	EA	$23.10	$2.31	10	200
MAG940CX	40W clear Xenon warm white 2900K dimmable	EA	$25.87	$2.59	10	200
MAG940F	40W frost warm white 3000K dimmable	EA	$23.10	$2.31	20	200
MAG9100C	100W clear warm white 3200K dimmable	EA	$22.01	$2.20	20	200
MAG9100F	100W frost warm white 3000K dimmable	EA	$22.01	$2.20	20	100

N New product | ECO Energy Saving products | More info available. See technical pages | COMING SOON Coming soon | Product to be discontinued

Whilst most items are stock lines some products are made to order. UoM = Unit Of Measure.
Prices are effective 1 June 2017 and are subject to change without notice. Trade prices exclude GST.

Lighting & sensors

Halogen lamps

MGU1040

MGU1040G

MAFTDBPB

MABABRPB

MABABYPB

Cat.Nos	Halogen G9 lamps dimmable - Nelson	UoM	Trade price $	GST $	Box qty	Carton qty
MAG940FX	40W frost Xenon warm white 2900K dimmable	EA	$25.87	$2.59	10	200
MAG950C	50W clear warm white 3200K dimmable	EA	$23.10	$2.31	20	200
MAG975C	75W clear warm white 3200K dimmable	EA	$23.10	$2.31	20	200
MAG975F	75W frost warm white 3000K dimmable	EA	$23.10	$2.31	20	200
	Halogen GU10 lamps - Nelson					
MGU1040	50W clear aluminium reflector	EA	$14.32	$1.43	10	200
MGU1040E	50W clear aluminium reflector eco	EA	$12.72	$1.27	10	100
MGU1040G	50W green aluminium reflector	EA	$14.68	$1.47	10	200
MGU1040R	50W red aluminium reflector	EA	$14.68	$1.47	10	200
MGU1040Y	50W yellow aluminium reflector	EA	$14.68	$1.47	10	200
	Halogen MR8 lamps - Nelson					
MAMR8CPB	10W clear aluminium reflector	EA	$11.27	$1.13	10	200
MAMR820CPB	20W clear aluminium reflector	EA	$11.27	$1.13	10	200
	Halogen MR11 lamps - Nelson					
MAFTD	20W clear aluminium reflector	EA	$11.38	$1.14	10	200
MAFTDBPB	20W blue aluminium reflector	EA	$11.57	$1.16	10	200
MAFTDCPB	20W clear aluminium reflector	EA	$10.88	$1.09	10	200
MAFTDGPB	20W green aluminium reflector	EA	$11.57	$1.16	10	200
MAFTDRPB	20W red aluminium reflector	EA	$11.57	$1.16	10	200
MAFTDYPB	20W yellow aluminium reflector	EA	$11.57	$1.16	10	200
MAFTECPB	35W clear aluminium reflector	EA	$10.88	$1.09	10	200
	Halogen MR16 lamps - Nelson					
MATEN38CPB	10W clear aluminium reflector	EA	$9.26	$0.93	10	200
MABABBPB	20W blue aluminium reflector	EA	$9.62	$0.96	10	200
MABABCPB	20W clear aluminium reflector	EA	$9.26	$0.93	10	200
MABABGPB	20W green aluminium reflector	EA	$9.62	$0.96	10	200
MABABRPB	20W red aluminium reflector	EA	$9.62	$0.96	10	200
MABABYPB	20W yellow aluminium reflector	EA	$9.62	$0.96	10	200

N New product | ECO Energy Saving products | More info available. See technical pages | COMING SOON Coming soon | Product to be discontinued

Whilst most items are stock lines some products are made to order. UoM = Unit Of Measure.
Prices are effective 1 June 2017 and are subject to change without notice. Trade prices exclude GST.

Lighting & sensors

Halogen, tungsten halogen and incandescent lamps

MAFXNCPB

MQ1LC

MP2050

MXMUSHR60F

Cat.Nos	Halogen MR16 lamps - Nelson	UoM	Trade price $	GST $	Box qty	Carton qty
MAFTE	35W clear aluminium reflector	EA	$13.74	$1.37	10	200
MAFXNBPB	35W blue aluminium reflector	EA	$9.62	$0.96	10	200
MAFXNCPB	35W clear aluminium reflector	EA	$9.26	$0.93	10	200
MAFMWCCPB	35W clear aluminium reflector 60° beam angle	EA	$9.26	$0.93	10	200
MAWFLC4P	35W clear aluminium reflector 4 pack	EA	$15.73	$1.57	-	100
MAFXNGPB	35W green aluminium reflector	EA	$9.62	$0.96	10	200
MAFXNRPB	35W red aluminium reflector	EA	$9.62	$0.96	10	200
MAFXNYPB	35W yellow aluminium reflector	EA	$9.62	$0.96	10	200
MAFXTRBB	35W blue/red/yellow	EA	$13.43	$1.34	10	200
MAFXTRBG	35W blue/red/green	EA	$13.43	$1.34	10	200
MAFXTRBR	35W blue/red/yellow	EA	$13.43	$1.34	10	200
	Tungsten halogen R75 - Nelson					
MQ1LC	100W J type clear linear	EA	$27.56	$2.76	50	500
MQ01SDP	150W J type clear linear twin pack	EA	$16.77	$1.68	20	120
MQ05C	500W J type clear linear	EA	$9.53	$0.95	50	500
MQ05DP	500W J type clear linear twin pack	EA	$13.10	$1.31	20	120
MQ05C6P	500W J type clear linear 6 pack	EA	$26.68	$2.67	20	80
	Halogen PAR20 - Nelson					
MP2050	50W E27	EA	$13.87	$1.39	-	100
	Incandescent E27 mushroom lamps - Nelson					
MXMUSHR60F	60W E27	EA	$8.01	$0.80	-	100

N New product | ECO Energy Saving products | More info available. See technical pages | COMING SOON Coming soon | Product to be discontinued

Whilst most items are stock lines some products are made to order. UoM = Unit Of Measure.
Prices are effective 1 June 2017 and are subject to change without notice. Trade prices exclude GST.

Lighting & sensors

Incandescent lamps

MP3880

MXR6340ES

MXR8060ES

Cat.Nos	Incandescent PAR38 - Nelson	UoM	Trade price $	GST $	Box qty	Carton qty
MP3880	80W E27	EA	$12.33	$1.23	-	24
MP38120	120W E27	EA	$12.33	$1.23	-	24
MP38	150W E27	EA	$12.33	$1.23	-	24
MP38DB	150W E27 twin pack	EA	$23.75	$2.38	-	12
	Incandescent pilot lamps - Nelson					
MXUP25BCC	25W B22 clear	EA	$4.32	$0.43	-	50
MXUP25ESC	25W E27 clear	EA	$4.32	$0.43	-	50
MXUP25SESC	25W E14 clear	EA	$4.32	$0.43	5	50
	Incandescent R63 - Nelson					
MXR6340ES	40W E27 clear	EA	$4.27	$0.43	-	100
MXR6360ES	60W E27 clear	EA	$4.27	$0.43	-	48
	Incandescent R80 lamps - Nelson					
MXR80100ES	100W E27 clear	EA	$4.07	$0.41	-	100
MXR8060ES	60W E27 clear	EA	$4.27	$0.43	-	50
MXR8075ES	75W E27 clear	EA	$4.07	$0.41	-	50

N New product | ECO Energy Saving products | More info available. See technical pages | COMING SOON Coming soon | Product to be discontinued

Whilst most items are stock lines some products are made to order. UoM = Unit Of Measure.
Prices are effective 1 June 2017 and are subject to change without notice. Trade prices exclude GST.

Lighting & sensors

Fluorescent and halogen accessories

380

F40

366LYWE

MTECOUGAR60

MTETRADE65

WMALCIT

Cat.Nos	Magnetic transformer for LED MR16 lamps	UoM	Trade price $	GST $	Box qty	Carton qty
LMT0115W	15VA transformer for MR16 dimmable LED lamps N	EA	$34.90	$3.49	-	20
	Fluorescent accessories					
	Fluorescent lampholders					
380	White fluorescent tombstone screwed terminals 40 pack	EA	$12.09	$1.21	40	680
388	White fluorescent tombstone with spring clips snap-lock terminals 40 pack	EA	$12.09	$1.21	40	680
381	White fluorescent tombstone snap lock terminals 40 pack	EA	$12.09	$1.21	40	680
	Starter sockets					
390	White fluorescent 7/32 diagonal holes screwed terminals 40 pack	EA	$12.09	$1.21	40	960
	Starters					
F40	White universal fluorescent 4W to 65W for twin series circuit 25 pack	EA	$1.49	$0.15	25	1000
F20	White universal 4W to 22W 25 pack	EA	$1.49	$0.15	25	1000
DF40	White fluorescent 4W to 65W for twin series circuit twin pack	EA	$3.17	$0.32	10	400
DF20	White universal 4W to 22W for twin fittings twin pack	EA	$3.17	$0.32	10	400
	Battenholders					
	Adjustable					
360WE	White B22 adjustable angle 64mm base 50mm mounting centre	EA	$19.18	$1.92	10	200
360/W1WE	White B22 adjustable angle 64mm base 50mm mounting centre WP	EA	$21.85	$2.18	5	100
	Fixed					
366LYWE	White B22 separate anch. plugs 68mm base 50mm mounting centre	EA	$7.79	$0.78	10	200
366YWE	White B22 integr. anch plugs 68mm base 50mm mounting centre	EA	$7.76	$0.78	10	200
366WE	White B22 68mm base 50mm mounting centre	EA	$7.55	$0.76	10	200
368WE	White B22 90mm base 50mm mounting centre	EA	$20.10	$2.01	10	160
366SWE	White B22 adjustable angle 64mm base 50mm mounting centre	EA	$12.54	$1.25	10	200
366BR	Brown B22 68mm base 50mm mounting centre	EA	$8.69	$0.87	10	200
368/1WE	White B22 90mm base 70mm mounting centre 4 terminal	EA	$25.52	$2.55	10	160
	Halogen Accessories					
WMALCIT	Installation tool for MR16 and GU10 lamps	EA	$12.62	$1.26	4	40
MAGX5R5P	Leads screw in MR16 5 pack	EA	$30.15	$3.02	20	200
MAGX5P5P	Leads push in MR16 5 pack	EA	$30.15	$3.02	20	200
MAGXHT5P	Leads push in hot temperature MR16 5 pack	EA	$29.70	$2.97	20	200
MTECOUGAR60	60W electronic transformer	EA	$17.43	$1.74	-	100
MTECOUG60T	60W electronic transformer 10 pack	EA	$155.48	$15.55	-	10
MTECOUGAR60P	60W electronic transformer flex & plug	EA	$24.33	$2.43	-	50
MTETRADE65	65W electronic transformer	EA	$28.95	$2.90	-	50

N New product | ECO Energy Saving products | More info available. See technical pages | COMING SOON Coming soon | Product to be discontinued

Whilst most items are stock lines some products are made to order. UoM = Unit Of Measure.
Prices are effective 1 June 2017 and are subject to change without notice. Trade prices exclude GST.

Lighting & sensors

Lighting accessories

333WE

310WE

D332WE

D9500WE

D1001/1

Cat.Nos	Lampholders	UoM	Trade price $	GST $	Box qty	Carton qty
	BC with cord grip					
333WE	White BC 4 terminals	EA	$7.85	$0.78	10	500
333BL	Black BC 4 terminals	EA	$7.85	$0.78	10	500
	Festoon lampholder					
303/1F	Black fanged screw-on cap 50mm mounting centre	EA	$16.07	$1.61	10	500
WS303/1F	Black fanged screw-on cap with WP skirt 50mm mounting centre	EA	$16.28	$1.63	10	200
	Lampholder skirts					
333SKWE	White BC with cord grip long skirt weatherproof	EA	$3.42	$0.34	10	500
310WE	White 2P pushbar sw. 1/2" brass thread with nipple top entry	EA	$28.88	$2.89	10	200
310/10WE	White double-pole pushbar switch 10mm thread top entry	EA	$24.50	$2.45	10	200
	Tapered cap					
359/10WE	White 10mm thread top cable entry	EA	$15.42	$1.54	10	500
359WE	White 1/2" brass thread nipple top entry 4 terminal	EA	$14.29	$1.43	10	500
D332WE	White safety	EA	$9.36	$0.94	10	200
D359WE	White 1/2" brass thread nipple top entry 4 terminal	EA	$17.83	$1.78	10	200
	Lamp shade					
D9500WE	Canopy light plug-in with safety lampholder 0.5m lead white	EA	$19.27	$1.93	5	30
	Night light					
D1001/1	Plug-in green moonglow white	EA	$27.07	$2.71	5	60
	Ceiling roses					
	Latching cover					
80WE	White 68mm mounting base 4 terminals	EA	$13.05	$1.30	10	200
	Screw on cover					
84WE	White 65mm base 4 plates 2 post per plate	EA	$13.58	$1.36	10	200

N New product | ECO Energy Saving products | More info available. See technical pages | COMING SOON Coming soon | Product to be discontinued

Whilst most items are stock lines some products are made to order. UoM = Unit Of Measure.
Prices are effective 1 June 2017 and are subject to change without notice. Trade prices exclude GST.

Lighting & sensors

Motion sensors and smoke alarms

630R02WE

630S01BL

630S01WE

630S02WE

488TRI3W

643085

Cat.Nos	360° Recessed Sensor		UoM	Trade price $	GST $	Box qty	Carton qty
630R01WE	PIR white recessed 300-800W auto-mode 360° scan 6m range	N	EA	$53.00	$5.30	-	-
630R02WE	PIR white recessed 250-1000W auto-mode 360° scan 8m range	N ECO	EA	$60.44	$6.04	-	-
630S02WE	PIR white surface mount 250-1000W auto 360° scan 8m range	N	EA	$63.00	$6.30	-	-
	IP44 Sensors						
630S01WE	PIR white IP44 wall 300-1200W auto 180° scan 12m range	N	EA	$74.68	$7.46	-	-
630S01BL	PIR black IP44 wall 300-1200W auto 180° scan 12m range	N	EA	$74.68	$7.46	-	-
630SM01WE	PIR white IP44 wall 300-1200W manual override 180° scan 12m range	N	EA	$86.20	$8.62	-	-
630SM01BL	PIR black IP44 wall 300-1200W manual override 180° scan 12m range	N	EA	$86.20	$8.62	-	-
630/3	PIR white IP44 wall 450-1200W manual override 180°scan 12m range	ECO	EA	$86.20	$8.62	-	40
630/3A	PIR white IP44 wall 450-1200W auto 180°scan 12m range	ECO	EA	$74.68	$7.47	5	40
630/5	PIR white ceiling 600-1200W 360°scan 12m range	ECO	EA	$159.24	$15.92	-	60
	IP44 Sensors - Nelson						
MPES34	PIR white IP44 wall 500-1100W manual override 180°scan 12m range	ECO	EA	$66.50	$6.65	-	40
MPES34B	PIR black IP44 wall 500-1100W manual override 180°scan 12m range	ECO	EA	$69.04	$6.90	-	50
	IP66 Sensors						
630/9-2W	2 wire PIR plastic white IP66 wall 1200W 110°scan 18m range	ECO ✕	EA	$192.17	$19.22	-	20
630/9-3W	3 wire PIR plastic white IP66 wall 2400W 110°scan 18m range	ECO	EA	$210.72	$21.07	-	20
	IP66 Sensors - Nelson						
MPES66-3W	3 wire PIR plastic white IP66 wall 2400W 110°scan 18m range		EA	$217.81	$21.78	-	-
	IP66 Sensors - Legrand						
488TRI3W	3 wire PIR/Microwave/Photoelectric detection plastic white IP66 wall 1200-2400W 120° scan 18m range	ECO ++	EA	$176.20	$17.62	-	20
	Smoke alarms 240V a.c. 50Hz - Legrand						
643085	Photoelectric white surface mount compliant to AS3876:2014		EA	$123.63	$12.36	6	24
643086	Smoke alarm interface for interconnection with other devices		EA	$141.23	$14.12	-	15

N New product | ECO Energy Saving products | ++ More info available. See technical pages | COMING SOON Coming soon | ✕ Product to be discontinued

Whilst most items are stock lines some products are made to order. UoM = Unit Of Measure.
Prices are effective 1 June 2017 and are subject to change without notice. Trade prices exclude GST.

Photoelectric Smoke Alarm, 240V

COMPLIANT TO AS3876:2014

SPECIFICATIONS

Cat No.	643085	**Depth:**	49mm
Colour:	White	**Mounting centre:**	84mm
Type:	Photoelectric	**Siren sound level:**	85db at 3m
Diameter:	147mm	**Supply Voltage:**	230-240V a.c.

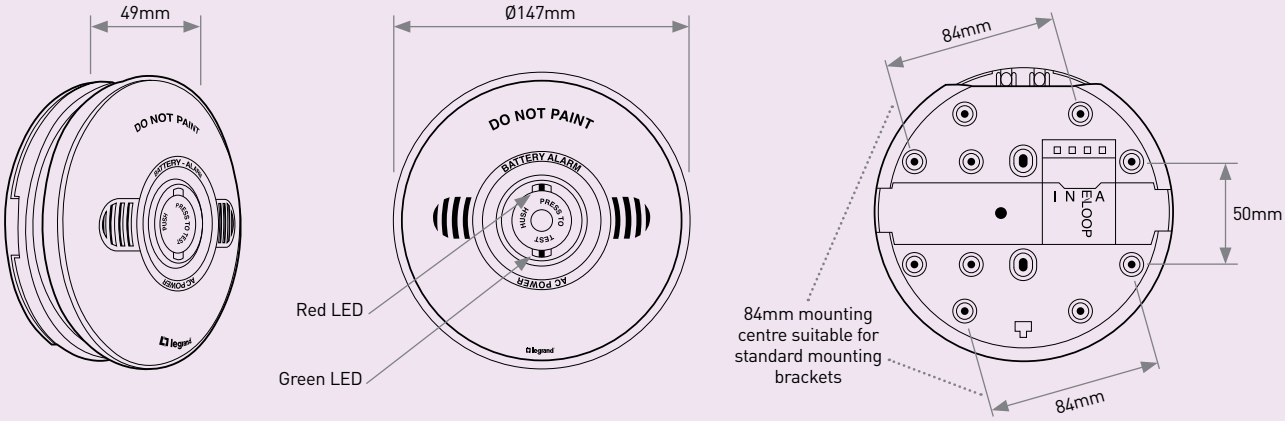

Self Calibration Capacity

Every 24 hours the device automatically adjusts the detection sensitivity. This feature reduced the incidence of false alarms due to dust built up inside the detection chamber, while fully maintaining its smoke detection sensitivity.

New Mesh Covering Surrounding the chamber

The fine material of the mesh covering will reduce the penetration of smaller dust particles.

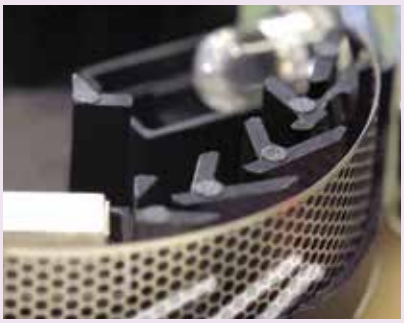

Dust Protection Bag

To minimise dust or dry-wall particles entering the unit during installation, the smoke alarm is fitted with a dust protection bag.

legrand®

Lighting & sensors

Garden lighting

RGLSSP2

RGLSPBL1

GLLEDPLBL

RGLBW2

RGL1215

Cat.Nos	Garden lighting 12V a.c.	UoM	Trade price $	GST $	Box qty	Carton qty
	Spotlights					
GLLEDSLSS	1W spotlight LED stainless steel	EA	$46.64	$4.66	3	36
GLLEDSLBL	1W spotlight LED black	EA	$26.77	$2.68	-	20
GL20WSLSS	20W spotlight halogen stainless steel	EA	$142.45	$14.24	3	12
GL20WMSLBL	20W spotlight halogen black	EA	$29.87	$2.99	-	40
	Mini Spotlights					
RGLKVSPBL4	5W spotlight halogen polypropylene black square including transformer and cable 4 pack	PK	$64.90	$6.49	-	6
RGLVSPBL	5W spotlight halogen weatherproof polypropylene black	EA	$10.40	$1.04	10	20
RGLKSSM4	10W mini spotlight halogen aluminium IP67 including transformer and cable 4 pack	PK	$173.74	$17.37	-	4
RGLSSP2	10W mini spotlight halogen cast aluminium casing satin silver	EA	$43.37	$4.34	-	6
RGLVSBL	10W mini spotlight halogen metal construction black	EA	$43.37	$4.34	-	6
RGLKMVBL4	10W spotlight halogen metal black including transformer and cable 4 pack	PK	$173.74	$17.37	-	4
RGLAPSP2	20W mini spotlight halogen aluminium and glass casing brushed silver	EA	$49.28	$4.93	-	6
RGL21	20W spotlight halogen cast aluminium casing black	EA	$66.89	$6.69	-	4
	Submersible					
RGLSPBL1	1W submersible spotlight LED aluminium casing black IP68 glass diffuser	EA	$60.75	$6.08	-	6
RGLSPS1	1W submersible spotlight LED aluminium casing satin silver IP68 glass diffuser	EA	$60.75	$6.08	-	6
	Pond Lights					
GLLEDPLBL	1W LED black	EA	$35.19	$3.52	-	40
GLLEDPLSS	1W LED stainless steel adjust angle 90°-180°	EA	$44.84	$4.48	-	24
GL20WMPLBL4P	20W halogen 20W black 4 pack	PK	$86.10	$8.61	-	4
GL20WMPLBL	20W halogen black	EA	$26.26	$2.63	-	20
GL35WPLBL	35W halogen black	EA	$40.07	$4.01	-	20
GL35WPLSS	35W halogen stainless steel	EA	$83.17	$8.32	-	10
	Bollards and path lights					
RGLBW2	0.5W path light LED aluminium casing black frosted glass	EA	$52.41	$5.24	-	16
RGLSLMW4P	0.8W bollards LED stainless steel body IP67 silver 4 pack	PK	$53.23	$5.32	-	8
RGLVPLB	5W pathlight halogen weatherproof polypropylene IP67 black	EA	$8.66	$0.87	10	20
RGL1215	8W bollard LED stainless steel 304 construction silver	EA	$93.55	$9.36	-	6
RGL3BL2P	10W T-dome uplights halogen metal body black twin pack	PK	$35.85	$3.58	-	6
RGL22	10W pathlight halogen aluminium casing black solid glass diffuser	EA	$66.89	$6.69	-	4
RGL1	20W bollard walklight halogen aluminium & glass body verdigris	EA	$60.95	$6.10	-	4

N New product | ECO Energy Saving products | More info available. See technical pages | COMING SOON Coming soon | Product to be discontinued

Whilst most items are stock lines some products are made to order. UoM = Unit Of Measure.
Prices are effective 1 June 2017 and are subject to change without notice. Trade prices exclude GST.

Lighting & sensors

Garden lighting

RGLSUP38

RGLSED2P

RGLPCTAW20

RGLTR220

RGL10

DSLBAT4

Cat.Nos	Garden lighting 12V a.c.	UoM	Trade price $	GST $	Box qty	Carton qty
	Uplights					
RGLSUP38	20W halogen aluminium body satin silver IP67	EA	$79.52	$7.95	-	4
	Deck and step lights					
RGLKRSLD24	0.3W deck light LED stainless silver IP67 4 pack	EA	$107.48	$10.75	6	24
RGLKRSLD4	0.3W deck light LED stainless silver kit 4 lights, transf, cable	EA	$139.45	$13.94	1	6
RGLKRSLDBL4	0.3W deck light LED stainless steel & plastic silver 4 pack	EA	$105.37	$10.54	6	24
RGLSSLD2	0.8W deck&wall light LED aluminium stainless steel twin pack	EA	$79.80	$7.98	6	24
RGLSED2P	10W deck light halogen WP alloy body satin silver twin pack	EA	$42.95	$4.30	4	16
RGLOSLD1	1W deck & wall light LED aluminium stainless steel frosted glass	EA	$51.08	$5.11	6	24
	Wall lights					
RGLSSW1	0.5W wall light LED aluminium casing satin silver	EA	$35.87	$3.59	6	24
	Transformers					
RGLPCTAW20	10VA black with 12m narrow cable	EA	$42.03	$4.20	-	6
RGLTR60	60VA self reset thermal overload black IP56	EA	$81.83	$8.18	-	8
RGLTR105	105VA self reset thermal overload black IP56	EA	$106.89	$10.69	-	6
RGL11	150VA self reset thermal overload black IP56	EA	$118.30	$11.83	-	6
RGLTR220	220VA self reset thermal overload black IP56	EA	$225.83	$22.58	-	4
RGLTR400	400VA self reset thermal overload prot. black IP64	EA	$326.22	$32.62	-	2
	Cable					
RGL9	10m garden cable garden duty black	EA	$67.52	$6.75	5	20
RGLHSC15	15m garden cable standard duty for haloscape black	EA	$33.24	$3.32	10	20
RGL8	20m garden cable garden duty black	EA	$34.54	$3.45	5	20
RGLCL21/30	30m garden cable extra heavy duty black 2 core 2.08mm	EA	$92.51	$9.25	-	5
RGLCL33/30	30m garden cable extra heavy duty black 2 core 3.3mm	EA	$121.76	$12.18	-	5
	Timers and sensors					
DGLS150	150W dusk to dawn sensor halogen UV resist plastic IP44 black	EA	$42.84	$4.28	6	36
RGL10	200W sunset timer automatic UV resistant plastic black	EA	$71.07	$7.11	-	5
	Lamp replacements					
DGLWLED	Replacement globe LED 0.5W 12V a.c. glass transparent twin pack	EA	$37.55	$3.76	8	32
	Solar garden lighting					
	Accessories					
DSLBAT4	Solar rechargeable batteries AA NiCd 600mAh yellow 4 pack	PK	$16.97	$1.70	20	80

N New product | ECO Energy Saving products | More info available. See technical pages | COMING SOON Coming soon | Product to be discontinued

Whilst most items are stock lines some products are made to order. UoM = Unit Of Measure.
Prices are effective 1 June 2017 and are subject to change without notice. Trade prices exclude GST.

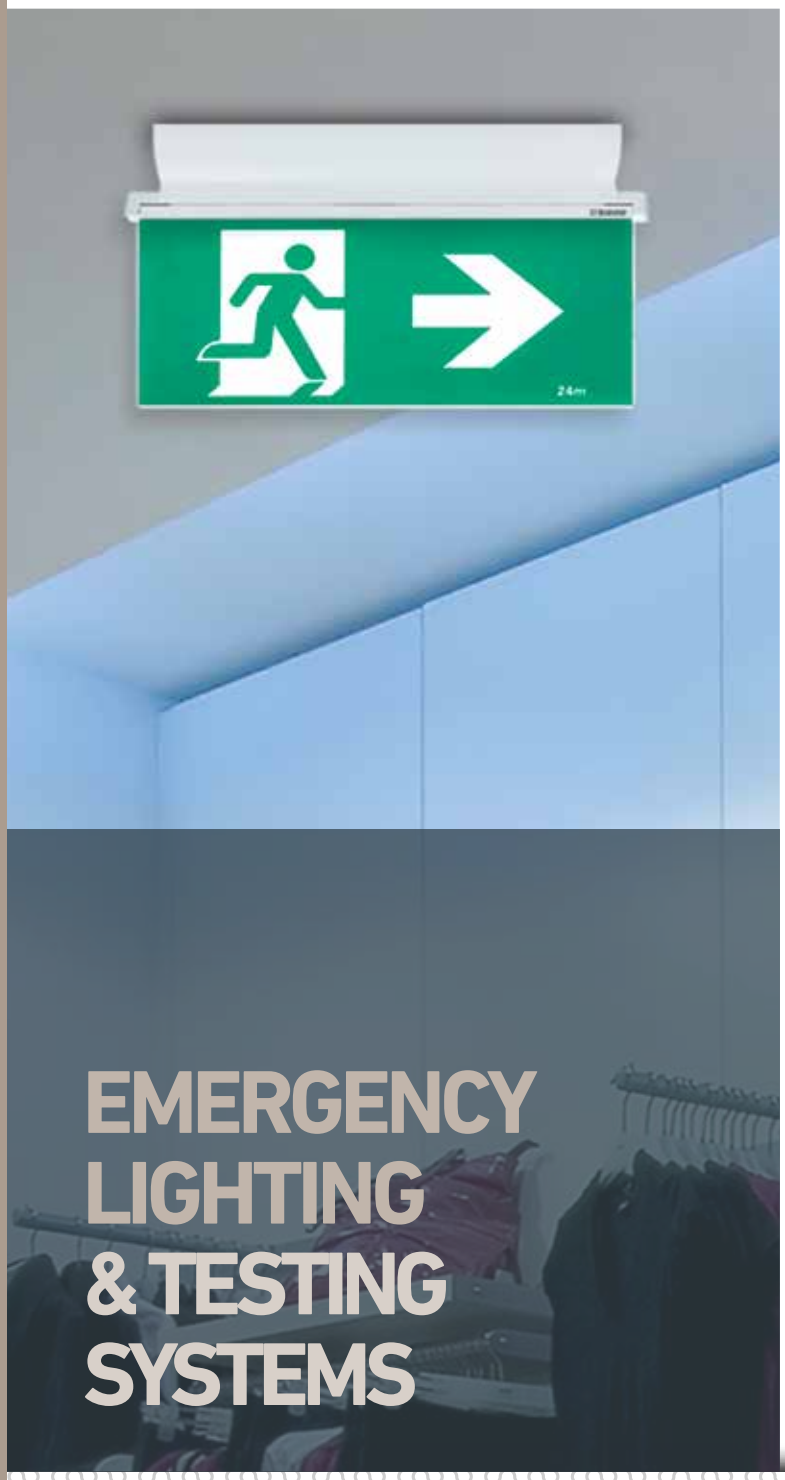

EMERGENCY LIGHTING & TESTING SYSTEMS

Emergency Testing Systems

P. 328
Axiom System

Emergency Exit Signs

P. 329
E3 LED Edgelight

P. 333
G2 LED
Slide Connect

Emergency Luminaires

P. 337
Super LED
Satellite

P. 339-340
T5 and T8
Metal Fluorescent
Battens

Emergency Power Packs and Batteries

P. 344
Power Packs

FEATURED PRODUCTS

E2 LED Edgelight
(p. 330)

Large LED Exit Signs
32m, 48m, 60m
(p. 335)

P. 328
Test Switch and Circuit Sensing Module

P. 330
E2 LED Edgelight

P. 331
EB LED Edgelight

P. 332
Securit LED

P. 334
ER2 LED Utility Exit

P. 335
Large LED Exit Signs

P. 336
Weatherproof LED Exit Signs

P. 338
LED Satellite

P. 338
Freezer LED Satellite

P. 338
Weatherproof LED Satellite

P. 339
Twin LED Spotlights

P. 341-342
LED, T5 and T8 Weatherproof Battens

P. 343
Bulkhead LED

P. 343
Oysters

Super LED Satellite
(p. 337)

WP2 Weatherproof Battens
(p. 341)

Emergency lighting & testing systems

Emergency testing systems

682298

682084

682083

682085

412536

Cat.Nos	AXIOM® system	UoM	Trade price $	GST $	Box qty	Carton qty
682298	Area Controller	EA	P.O.A	-	-	-
222343	Personal computer including printer	EA	P.O.A	-	-	-
223185	Central interface unit USB:RS485	EA	P.O.A	-	-	-
682299	Aegis emergency lighting monitoring software	EA	P.O.A	-	-	-
	Accessories for Axiom system					
	Data cables					
201058	Commander SPU cable	EA	P.O.A	-	-	-
682370	6 core flat 500m roll yellow	MT	P.O.A	-	-	-
682371	10 core flat 500m roll yellow	MT	P.O.A	-	-	-
223019	Crimping tool for data cable	EA	P.O.A	-	-	-
	Cable components					
682372	3 way coupler	EA	P.O.A	-	-	-
682373	Coupler for 6 core cable	EA	P.O.A	-	-	-
682374	Coupler for 10 core cable	EA	P.O.A	-	-	-
682375	Modular plug for 6 core cable	EA	P.O.A	-	-	-
682376	Modular plug for 10 core cable	EA	P.O.A	-	-	-
	Network components					
682377	Converter LAN to RS485 1 input/1 output	EA	P.O.A	-	-	-
	Test switch and circuit sensing module					
	Test switch (OEM)					
682084	Test switch DIN mount 72 x 83 x 66mm	EA	$304.40	$30.44	-	-
	Test switch (trade)					
682083	Test switch surface mount 180 x 190 x 85mm	EA	$401.29	$40.13	-	-
	Circuit sensing module					
682085	Circuit sensing module for 8 lighting circuit 72 x 83 x 66mm	EA	$346.17	$34.62	-	-
	Contactor					
412536	230V a.c. 25A 4NC 4 Mod	EA	$130.32	$13.03	-	-
	Accessories					
682086	Key switch and barrel	EA	$42.88	$4.29	-	-

N New product | ECO Energy Saving products | More info available. See technical pages | COMING SOON Coming soon | Product to be discontinued

Whilst most items are stock lines some products are made to order. UoM = Unit Of Measure.
Prices are effective 1 June 2017 and are subject to change without notice. Trade prices exclude GST.

Emergency lighting & testing systems

Emergency exit signs

684431

684432

684439

684440

Cat.Nos	E3™ LED Edgelight	C0	C90	C180		UoM	Trade price $	GST $	Box qty	Carton qty
	For complete fixture, order power pack + diffuser type									
	SPU - recessed power pack only									
684437	Maintained power pack LED				ECO +	EA	$330.12	$33.01	-	-
	SPU - surface mounted power pack only									
684443	Maintained power pack LED 3W silver				ECO +	EA	$404.65	$40.47	-	-
	Axiom® - recessed power pack only									
684438	Maintained power pack LED				ECO +	EA	P.O.A	-	-	-
	Axiom® - surface mounted power pack only									
684444	Maintained power pack LED 3W silver				ECO +	EA	P.O.A	-	-	-
	Diffuser - single-sided - stainless steel wall plate									
684431	Wall plate - RM	N/A	N/A	*	+	EA	$721.72	$72.17	-	-
684432	Wall plate - left arrow - RM	N/A	N/A	*	+	EA	$721.72	$72.17	-	-
684433	Wall plate - RM - right arrow	N/A	N/A	*	+	EA	$721.72	$72.17	-	-
684439	RM - wall plate	N/A	N/A	*	+	EA	$721.72	$72.17	-	-
684440	Left arrow - RM - wall plate	N/A	N/A	*	+	EA	$721.72	$72.17	-	-
684441	RM - right arrow - wall plate	N/A	N/A	*	+	EA	$721.72	$72.17	-	-
	Diffuser - double-sided - stainless steel wall plate									
684434	Wall plate - RM	N/A	N/A	*	+	EA	$799.88	$79.99	-	-
684435	Wall plate - arrow to wall - RM	N/A	N/A	*	+	EA	$799.88	$79.99	-	-
684436	Wall plate - RM - arrow away from wall	N/A	N/A	*	+	EA	$799.88	$79.99	-	-
	Accessories									
686240	Battery pack 4 x AA in-line for non-DALI models					EA	$22.18	$2.22	-	-

RM = Running man , ss = Single sided, ds = Double sided

*Product complies with AS2293 however does not have a photometric classification.

N New product | ECO Energy Saving products | + More info available. See technical pages | COMING SOON Coming soon | ✕ Product to be discontinued

Whilst most items are stock lines some products are made to order. UoM = Unit Of Measure.
Prices are effective 1 June 2017 and are subject to change without notice. Trade prices exclude GST.

Emergency lighting & testing systems

Emergency exit signs

684730

684731

684733

Cat.Nos	E2™ LED Edgelight - 24m	C0 C90 C180		UoM	Trade price $	GST $	Box qty	Carton qty
	SPU - recessed							
684730	Maintained LED with RM decals/ss/ds white	C10 C12.5	ECO	EA	$431.58	$43.16	-	-
	SPU - surface mounted							
684731	Maintained LED with RM decals/ss/ds white	C10 C12.5	ECO	EA	$371.65	$37.16	-	-
684733	Maintained LED with RM decals/ss/ds black	N/A N/A *	ECO	EA	$549.66	$54.97	-	-
	Axiom® - recessed							
684740	Maintained LED with RM decals/ss/ds white	C10 C12.5	ECO	EA	P.O.A	-	-	-
	Axiom® - surface mounted							
684741	Maintained LED with RM decals/ss/ds white	C10 C12.5	ECO	EA	P.O.A	-	-	-
684742	Maintained LED no decals/ss/ds white	N/A N/A *	ECO	EA	P.O.A	-	-	-
684743	Maintained LED with RM decals/ss/ds black	N/A N/A *	ECO	EA	P.O.A	-	-	-
	DALI - recessed							
684730/D	Maintained LED with RM decals/ss/ds white	C8 C16	N ECO	EA	P.O.A	-	-	-
	DALI - surface mounted							
684731/D	Maintained LED with RM decals/ss/ds white	C8 C16	N ECO	EA	P.O.A	-	-	-
684733/D	Maintained LED with RM decals/ss/ds black	C8 C16	N ECO	EA	P.O.A	-	-	-
	Accessories							
684737	Mounting block kit white			EA	$26.53	$2.65	-	-
686240	Battery pack 4 x AA in-line for non-DALI models			EA	$22.18	$2.22	-	-
686216	Wire suspension kit 2 x 6m			EA	$106.52	$10.65	-	-
686214	Battery pack 2x2 Sub-C type for non-DALI models			EA	$51.15	$5.11	-	-
686235	Wire guard for wall mount exit signs			EA	$153.04	$15.30	-	-
686236	Wire guard for ceiling mount exit signs			EA	$197.57	$19.76	-	-
686260	Suspension rod kit 600mm white			EA	$125.83	$12.58	-	-
686261	Suspension rod kit 1200mm white			EA	$132.83	$13.28	-	-
686262	Suspension rod kit 3000mm white			EA	$142.73	$14.27	-	-
686263	Suspension rod kit 600mm black			EA	$131.08	$13.11	-	-
686264	Suspension rod kit 1200mm black			EA	$138.65	$13.86	-	-
686265	Suspension rod kit 3000mm black			EA	$146.80	$14.68	-	-

RM = Running man , ss = Single sided, ds = Double sided

*Product complies with AS2293 however does not have a photometric classification.

N New product | ECO Energy Saving products | More info available. See technical pages | COMING SOON Coming soon | Product to be discontinued

Whilst most items are stock lines some products are made to order. UoM = Unit Of Measure.
Prices are effective 1 June 2017 and are subject to change without notice. Trade prices exclude GST.

Emergency lighting & testing systems

Emergency exit signs

684420B + 684408

Cat.Nos	EB™ LED Edgelight - 24m For complete fixture order body and diffuser type	C0 C90 C180		UoM	Trade price $	GST $	Box qty	Carton qty
	SPU - body							
684420B	Maintained/non-maintained LED		ECO	EA	$448.38	$44.84	-	-
	Axiom® - body							
684422B	Maintained LED		ECO	EA	P.O.A	-	-	-
	Diffusers - double-sided							
684408	RM straight ahead white-on-green	C20 D2.5		EA	$154.83	$15.48	-	-
684409	RM left/right white-on-green	C20 D2.5		EA	$152.57	$15.26	-	-
	Diffusers - single-sided							
684400	RM straight ahead white-on-green	E12.5 B8		EA	$152.57	$15.26	-	-
684401	RM left white-on-green	E12.5 B8		EA	$154.83	$15.48	-	-
684402	RM right white-on-green	E12.5 B8		EA	$154.83	$15.48	-	-
	Accessories							
682206	Surface mount box only			EA	$158.91	$15.89	-	-
686240	Battery pack 4 x AA in-line			EA	$22.18	$2.22	-	-

RM = Running man , ss = Single sided, ds = Double sided

Emergency lighting & testing systems

Emergency exit signs

684770

684775

Cat.Nos	Securit™ LED - 24m	C0	C90	C180		UoM	Trade price $	GST $	Box qty	Carton qty
	SPU - recessed									
684770	Maintained LED ss RM	E1.3	E1		ECO	EA	$833.23	$83.32	-	-
684771	Maintained LED ss RM left	E1.3	E1		ECO	EA	$833.23	$83.32	-	-
684772	Maintained LED ss RM right	E1.3	E1		ECO	EA	$833.23	$83.32	-	-
684773	Maintained LED ds RM	E1.3	E1		ECO	EA	$833.23	$83.32	-	-
684774	Maintained LED ds RM left/right	E1.3	E1		ECO	EA	$833.23	$83.32	-	-
	SPU - surface mount									
684775	Maintained LED ss RM	E1.3	E1		ECO	EA	$833.23	$83.32	-	-
684776	Maintained LED ss RM left	E1.3	E1		ECO	EA	$833.23	$83.32	-	-
684777	Maintained LED ss RM right	E1.3	E1		ECO	EA	$833.23	$83.32	-	-
684778	Maintained LED ds RM	E1.3	E1		ECO	EA	$833.23	$83.32	-	-
684779	Maintained LED ds RM left/right	E1.3	E1		ECO	EA	$833.23	$83.32	-	-
	Axiom® - recessed									
684780	Maintained LED ss RM	E1.3	E1		ECO	EA	P.O.A	-	-	-
684781	Maintained LED ss RM left	E1.3	E1		ECO	EA	P.O.A	-	-	-
684782	Maintained LED ss RM right	E1.3	E1		ECO	EA	P.O.A	-	-	-
684783	Maintained LED ds RM	E1.3	E1		ECO	EA	P.O.A	-	-	-
684784	Maintained LED ds RM left/right	E1.3	E1		ECO	EA	P.O.A	-	-	-
	Axiom® (wired only) - surface mounted									
684785	Maintained LED ss RM	E1.3	E1		ECO	EA	P.O.A	-	-	-
684786	Maintained LED ss RM left	E1.3	E1		ECO	EA	P.O.A	-	-	-
684787	Maintained LED ss RM right	E1.3	E1		ECO	EA	P.O.A	-	-	-
684788	Maintained LED ds RM	E1.3	E1		ECO	EA	P.O.A	-	-	-
684789	Maintained LED ds RM left/right	E1.3	E1		ECO	EA	P.O.A	-	-	-
	DALI - recessed									
684770/D	Maintained LED ss RM	E1.3	E1		N ECO	EA	P.O.A	-	-	-
684771/D	Maintained LED ss RM left	E1.3	E1		N ECO	EA	P.O.A	-	-	-
684772/D	Maintained LED ss RM right	E1.3	E1		N ECO	EA	P.O.A	-	-	-
684773/D	Maintained LED ds RM	E1.3	E1		N ECO	EA	P.O.A	-	-	-
684774/D	Maintained LED ds RM left/right	E1.3	E1		N ECO	EA	P.O.A	-	-	-

RM = Running man , ss = Single sided, ds = Double sided

N New product | ECO Energy Saving products | More info available. See technical pages | Coming soon | Product to be discontinued

Whilst most items are stock lines some products are made to order. UoM = Unit Of Measure.
Prices are effective 1 June 2017 and are subject to change without notice. Trade prices exclude GST.

Emergency lighting & testing systems

Emergency exit signs

686200

Cat.Nos	Securit™ LED - 24m	C0	C90	C180		UoM	Trade price $	GST $	Box qty	Carton qty
	DALI - surface mounted									
684775/D	Maintained LED ss RM	E1.3		E1	N ECO	EA	P.O.A	-	-	-
684776/D	Maintained LED ss RM left	E1.3		E1	N ECO	EA	P.O.A	-	-	-
684777/D	Maintained LED ss RM right	E1.3		E1	N ECO	EA	P.O.A	-	-	-
684778/D	Maintained LED ds RM	E1.3		E1	N ECO	EA	P.O.A	-	-	-
684779/D	Maintained LED ds RM left/right	E1.3		E1	N ECO	EA	P.O.A	-	-	-
	G2™ LED Slide Connect - 24m									
	SPU									
686200	Maintained LED set of 4xRM decals/ss/ds - white	D1.25	A1.25		ECO +	EA	$257.31	$25.73	-	5
686206	Maintained LED set of 4xdecals/ss/ds - black	N/A	N/A		ECO +	EA	$314.89	$31.49	-	5
686208	Maintained LED set of 4xRM decals/ss/ds - silver	D1.25	A1.25		ECO +	EA	$355.64	$35.56	-	5
	Axiom®									
686203	Maintained LED set of 4xRM decals/ss/ds - white	D1.25	A1.25		+	EA	P.O.A	-	-	5
686207	Maintained LED set of 4xdecals/ss/ds - black	N/A	N/A		+	EA	P.O.A	-	-	5
686211	Maintained LED set of 4xRM decals/ss/ds - silver	D1.25	A1.25		+	EA	P.O.A	-	-	5
	DALI									
686200/D	Maintained LED set of 4xRM decals/ss/ds - white	D5	C20		N ECO +	EA	P.O.A	-	-	-
686206/D	Maintained LED set of 4xRM decals/ss/ds - black	N/A	N/A		N ECO +	EA	P.O.A	-	-	-
686208/D	Maintained LED set of 4xRM decals/ss/ds - silver	D5	C20		N ECO +	EA	P.O.A	-	-	-
	Accessories									
686215	Cantilever bracket for G2 exit signs white					EA	$101.96	$10.20	-	-
686216	Wire suspension kit 2 x 6m					EA	$106.52	$10.65	-	-
686214	Battery pack 2x2 Sub-C type for non-DALI models					EA	$51.15	$5.12	-	-
686235	Wire guard for wall mount exit signs					EA	$153.04	$15.30	-	-
686236	Wire guard for ceiling mount exit signs					EA	$197.57	$19.76	-	-
686260	Suspension rod kit 600mm white					EA	$125.83	$12.58	-	-
686261	Suspension rod kit 1200mm white					EA	$132.83	$13.28	-	-
686262	Suspension rod kit 3000mm white					EA	$142.73	$14.27	-	-
686263	Suspension rod kit 600mm black					EA	$131.08	$13.11	-	-
686264	Suspension rod kit 1200mm black					EA	$138.65	$13.86	-	-
686265	Suspension rod kit 3000mm black					EA	$137.84	$13.78	-	-
686216	Suspension wire kit 2x6m					EA	$106.52	$10.65	-	-

RM = Running man , ss = Single sided, ds = Double sided

N New product | ECO Energy Saving products | + More info available. See technical pages | COMING SOON Coming soon | ✕ Product to be discontinued

Whilst most items are stock lines some products are made to order. UoM = Unit Of Measure.
Prices are effective 1 June 2017 and are subject to change without notice. Trade prices exclude GST.

Emergency lighting & testing systems

Emergency exit signs

684447

684449

684481

Cat.Nos	ER2 LED utility exit - 24m	C0	C90	C180		UoM	Trade price $	GST $	Box qty	Carton qty
	SPU - wall mounted									
684447	Maintained LED ss with RM decals	E2.5	E2.5		ECO	EA	$160.26	$16.03	-	6
	SPU - ceiling mounted									
684449	Maintained LED ds with RM decals	E2.5	E2.5		ECO	EA	$160.26	$16.03	-	4
	Accessories									
686240	Battery pack 4 x AA in-line					EA	$22.18	$2.22	-	-
	Large LED exit									
	SPU - 32m									
684481	Maintained LED ss RM	D12.5	D5		ECO	EA	$654.85	$65.48	-	-
684482	Maintained LED ss RM left	D12.5	D5		ECO	EA	$654.85	$65.48	-	-
684483	Maintained LED ss RM right	D12.5	D5		ECO	EA	$654.85	$65.48	-	-
684484	Maintained LED ds RM	D12.5	D5		ECO	EA	$707.14	$70.71	-	-
684485	Maintained LED ds RM left/right	D12.5	D5		ECO	EA	$707.14	$70.71	-	-
	Axiom® - 32m									
684491	Maintained LED ss RM	D12.5	D5		ECO	EA	P.O.A	-	-	-
684492	Maintained LED ss RM left	D12.5	D5		ECO	EA	P.O.A	-	-	-
684493	Maintained LED ss RM right	D12.5	D5		ECO	EA	P.O.A	-	-	-
684494	Maintained LED ds RM	D12.5	D5		ECO	EA	P.O.A	-	-	-
684495	Maintained LED ds RM left/right	D12.5	D5		ECO	EA	P.O.A	-	-	-
	DALI - 32m									
684481/D	Maintained LED ss RM				N ECO	EA	P.O.A	-	-	-
684482/D	Maintained LED ss RM left				N ECO	EA	P.O.A	-	-	-
684483/D	Maintained LED ss RM right				N ECO	EA	P.O.A	-	-	-
684484/D	Maintained LED ds RM				N ECO	EA	P.O.A	-	-	-
684485/D	Maintained LED ds RM left/right				N ECO	EA	P.O.A	-	-	-

RM = Running man , ss = Single sided, ds = Double sided

N New product | ECO Energy Saving products | More info available. See technical pages | Coming soon | Product to be discontinued

Whilst most items are stock lines some products are made to order. UoM = Unit Of Measure.
Prices are effective 1 June 2017 and are subject to change without notice. Trade prices exclude GST.

Emergency lighting & testing systems

Emergency exit signs

684486

684501

Cat.Nos	Large LED exit	C0	C90	C180		UoM	Trade price $	GST $	Box qty	Carton qty
	SPU - 48m									
684486	Maintained LED ss RM	D12.5	D4		ECO	EA	$710.70	$71.07	-	-
684487	Maintained LED ss RM left	D12.5	D4		ECO	EA	$710.70	$71.07	-	-
684488	Maintained LED ss RM right	D12.5	D4		ECO	EA	$710.70	$71.07	-	-
684489	Maintained LED ds RM	D12.5	D4		ECO	EA	$766.57	$76.66	-	-
684490	Maintained LED ds RM left/right	D12.5	D4		ECO	EA	$766.57	$76.66	-	-
	Axiom® - 48m									
684496	Maintained LED ss RM	D12.5	D4		ECO	EA	P.O.A	-	-	-
684497	Maintained LED ss RM left	D12.5	D4		ECO	EA	P.O.A	-	-	-
684498	Maintained LED ss RM right	D12.5	D4		ECO	EA	P.O.A	-	-	-
684499	Maintained LED ds RM	D12.5	D4		ECO	EA	P.O.A	-	-	-
684500	Maintained LED ds RM left/right	D12.5	D4		ECO	EA	P.O.A	-	-	-
	DALI - 48m									
684486/D	Maintained LED ss RM	D12.5	C12.5		N ECO	EA	P.O.A	-	-	-
684487/D	Maintained LED ss RM left	D12.5	C12.5		N ECO	EA	P.O.A	-	-	-
684488/D	Maintained LED ss RM right	D12.5	C12.5		N ECO	EA	P.O.A	-	-	-
684489/D	Maintained LED ds RM	D12.5	C12.5		N ECO	EA	P.O.A	-	-	-
684490/D	Maintained LED ds RM left/right	D12.5	C12.5		N ECO	EA	P.O.A	-	-	-
	SPU - 60m									
684501	Maintained LED ss RM	D10	D3.2		ECO	EA	$1,586.31	$158.63	-	-
684502	Maintained LED ss RM left	D10	D3.2		ECO	EA	$1,586.31	$158.63	-	-
684503	Maintained LED ss RM right	D10	D3.2		ECO	EA	$1,586.31	$158.63	-	-
684504	Maintained LED ds RM	D10	D3.2		ECO	EA	$1,586.31	$158.63	-	-
684505	Maintained LED ds RM left/right	D10	D3.2		ECO	EA	$1,586.31	$158.63	-	-
	Axiom® - 60m									
684511	Maintained LED ss RM	D10	D3.2		ECO	EA	P.O.A	-	-	-
684512	Maintained LED ss RM left	D10	D3.2		ECO	EA	P.O.A	-	-	-
684513	Maintained LED ss RM right	D10	D3.2		ECO	EA	P.O.A	-	-	-
684514	Maintained LED ds RM	D10	D3.2		ECO	EA	P.O.A	-	-	-
684515	Maintained LED ds RM left/right	D10	D3.2		ECO	EA	P.O.A	-	-	-
	Accessories									
684508	Wall bracket for 32/48m					EA	$181.05	$18.10	-	-
684506	Wall bracket for 60m					EA	$386.75	$36.87	-	-
684509	Flush wall bracket for 32/48m					EA	$63.90	$6.39	-	-
684507	Flush wall bracket for 60m					EA	$95.85	$9.58	-	-
684874	Battery pack 5 x sub C for non-DALI models					EA	$65.60	$6.56	-	-

RM = Running man , ss = Single sided, ds = Double sided

N New product | ECO Energy Saving products | More info available. See technical pages | COMING SOON Coming soon | Product to be discontinued

Whilst most items are stock lines some products are made to order. UoM = Unit Of Measure.
Prices are effective 1 June 2017 and are subject to change without notice. Trade prices exclude GST.

Emergency lighting & testing systems

Emergency exit signs

684652

684662

684672

684682

Cat.Nos	Weatherproof LED exit	C0	C90	C180		UoM	Trade price $	GST $	Box qty	Carton qty
	SPU - 24m									
684650	Maintained LED ss RM	E2.5	E2		ECO +	EA	$592.06	$59.21	-	-
684651	Maintained LED ss RM left	E2.5	E2		ECO +	EA	$592.06	$59.21	-	-
684652	Maintained LED ss RM right	E2.5	E2		ECO +	EA	$592.06	$59.21	-	-
	SPU - 24m (freezer -30°C)									
684659	Maintained LED ss RM freezer	E2.5	E2		ECO +	EA	$710.49	$71.05	-	-
	Axiom® - 24m									
684660	Maintained LED ss RM	E2.5	E2		ECO +	EA	P.O.A	-	-	-
684661	Maintained LED ss RM left	E2.5	E2		ECO +	EA	P.O.A	-	-	-
684662	Maintained LED ss RM right	E2.5	E2		ECO +	EA	P.O.A	-	-	-
	Axiom® - 24m (freezer -30°C)									
684669	Maintained LED ss RM freezer	E2.5	E2		ECO +	EA	P.O.A	-	-	-
	DALI - 24m									
684650/D	Maintained LED ss RM	D3.2	E2		N ECO +	EA	P.O.A	-	-	-
684651/D	Maintained LED ss RM left	D3.2	E2		N ECO +	EA	P.O.A	-	-	-
684652/D	Maintained LED ss RM right	D3.2	E2		N ECO +	EA	P.O.A	-	-	-
	SPU - 32m									
684670	Maintained LED ss RM	E2.5	E2		ECO +	EA	$773.07	$77.31	-	-
684671	Maintained LED ss RM left	E2.5	E2		ECO +	EA	$773.07	$77.31	-	-
684672	Maintained LED ss RM right	E2.5	E2		ECO +	EA	$773.07	$77.31	-	-
	Axiom® - 32m									
684680	Maintained LED ss RM	E2.5	E2		ECO +	EA	P.O.A	-	-	-
684681	Maintained LED ss RM left	E2.5	E2		ECO +	EA	P.O.A	-	-	-
684682	Maintained LED ss RM right	E2.5	E2		ECO +	EA	P.O.A	-	-	-
	DALI - 32m									
684670/D	Maintained LED ss RM	E2.5	E1.6		N ECO +	EA	P.O.A	-	-	-
684671/D	Maintained LED ss RM left	E2.5	E1.6		N ECO +	EA	P.O.A	-	-	-
684672/D	Maintained LED ss RM right	E2.5	E1.6		N ECO +	EA	P.O.A	-	-	-
	Accessories									
684690	Wall bracket for 24m					EA	$100.00	$10.00	-	-
684691	Side bracket for 24m					EA	$365.00	$36.50	-	-
684692	Ceiling bracket for 24m					EA	$110.00	$11.00	-	-
684689	Battery pack 5 x sub C for non-DALI models					EA	$57.23	$5.72	-	-

RM = Running man , ss = Single sided, ds = Double sided

N New product | ECO Energy Saving products | + More info available. See technical pages | COMING SOON Coming soon | Product to be discontinued

Whilst most items are stock lines some products are made to order. UoM = Unit Of Measure.
Prices are effective 1 June 2017 and are subject to change without notice. Trade prices exclude GST.

Emergency lighting & testing systems

Emergency luminaires

685030

Cat.Nos	Super LED Satellite™	C0 C90 C180		UoM	Trade price $	GST $	Box qty	Carton qty
	SPU							
685030	Non-maintained LED IP65 grey	D100 D100	N ECO	EA	$541.66	$54.17	-	-
685031	Non-maintained LED IP65 black	D100 D100	N ECO	EA	$583.33	$58.33	-	-
	Axiom®							
685032	Non-maintained LED IP65 grey	D100 D100	N ECO	EA	P.O.A	-	-	-
685033	Non-maintained LED IP65 black	D100 D100	N ECO	EA	P.O.A	-	-	-
	Accessories							
686266	Rod suspension kit 1200mm grey		N	EA	P.O.A	-	-	-
686267	Rod suspension kit 3000mm grey		N	EA	P.O.A	-	-	-
686268	Rod suspension kit 1200mm black		N	EA	P.O.A	-	-	-
686269	Rod suspension kit 3000mm black		N	EA	P.O.A	-	-	-
685034	Suspension wire kit grey		N	EA	P.O.A	-	-	-
685035	Suspension wire kit black		N	EA	P.O.A	-	-	-
685036	Wall bracket grey		N	EA	P.O.A	-	-	-
685037	Wall bracket black		N	EA	P.O.A	-	-	-

RM = Running man , ss = Single sided, ds = Double sided

N New product | ECO Energy Saving products | More info available. See technical pages | COMING SOON Coming soon | Product to be discontinued

Whilst most items are stock lines some products are made to order. UoM = Unit Of Measure.
Prices are effective 1 June 2017 and are subject to change without notice. Trade prices exclude GST.

Emergency lighting & testing systems

Emergency luminaires

684850

684853

684878

684875

Cat.Nos	LED Satellite™	C0	C90	C180		UoM	Trade price $	GST $	Box qty	Carton qty
	SPU - recessed									
684850	Non-maintained LED white	D40	D40		ECO +	EA	$190.69	$19.07	-	10
684852	Non-maintained LED black	D40	D40		ECO +	EA	$221.05	$22.10	-	10
684855	Non-maintained LED white	D25	D25		ECO +	EA	$150.07	$15.01	-	10
	Axiom® - recessed									
684860	Non-maintained LED white	D40	D40		ECO +	EA	P.O.A	-	-	10
684862	Non-maintained LED black	D40	D40		ECO +	EA	P.O.A	-	-	10
	DALI - recessed									
684850/D	Non-maintained LED white	D50	D50		N ECO +	EA	P.O.A	-	-	10
684852/D	Non-maintained LED black	D50	D50		N ECO +	EA	P.O.A	-	-	10
	SPU - surface mounted									
684853	Non-maintained LED white	D40	D40		ECO +	EA	$291.95	$29.20	-	-
684854	Non-maintained LED black	D40	D40		ECO +	EA	$333.66	$33.37	-	-
	Axiom® - surface mounted									
684863	Non-maintained LED white	D40	D40		ECO +	EA	P.O.A	-	-	-
684864	Non-maintained LED black	D40	D40		ECO +	EA	P.O.A	-	-	-
	DALI - surface mounted									
684853/D	Non-maintained LED white	D50	D50		N ECO +	EA	P.O.A	-	-	-
684854/D	Non-maintained LED black	D50	D50		N ECO +	EA	P.O.A	-	-	-
	Weatherproof LED Satellites™									
	SPU									
684875	Non-maintained LED IP55 white	D25	D25		ECO +	EA	$298.91	$29.89	-	-
	Axiom®									
684879	Non-maintained LED IP55 white	D25	D25		ECO +	EA	P.O.A	-	-	-
	DALI									
684875/D	Non-maintained LED IP55	D25	D25		N ECO +	EA	P.O.A	-	-	-
	Freezer LED Satellites™									
	SPU									
684878	Non-maintained LED IP55 for -25°C white	D25	D25		ECO +	EA	$279.38	$27.94	-	-
	Axiom®									
684880	Non-maintained LED IP55 for -25°C white	D25	D25		ECO +	EA	P.O.A	-	-	-
	Accessories									
684874	Battery pack 5 x sub C for non-DALI models	D25	D25			EA	$65.60	$6.56	-	-

RM = Running man , ss = Single sided, ds = Double sided

N New product | ECO Energy Saving products | + More info available. See technical pages | COMING SOON Coming soon | Product to be discontinued

Whilst most items are stock lines some products are made to order. UoM = Unit Of Measure.
Prices are effective 1 June 2017 and are subject to change without notice. Trade prices exclude GST.

Emergency lighting & testing systems

Emergency luminaires

682055

684956

Cat.Nos	Twin LED spotlight	C0	C90	C180		UoM	Trade price $	GST $	Box qty	Carton qty
	SPU									
682055	Non-maintained LED 2 x 10W IP65				ECO	EA	$851.43	$85.14	-	-
	Axiom®									
682056	Non-maintained LED 2 x 10W IP65				ECO	EA	P.O.A	-	-	-
	Accessories									
682369	Wire guard					EA	$157.60	$15.76	-	-
	T5 metal battens									
	SPU									
684954	Bare batten switched maintained 1 x 28W L12	D63	D20			EA	$282.71	$28.27	-	-
684956	Bare batten switched maintained 2 x 28W L12	D63	D20	D63		EA	$290.46	$29.05	-	-
	Axiom®									
684964	Bare batten switched maintained 1 x 28W L12	D80	D25			EA	P.O.A	-	-	-
684966	Bare batten switched maintained 2 x 28W L12	D80	D25	D80		EA	P.O.A	-	-	-
	Accessories									
684986	Diffuser for 28W					EA	$32.19	$3.22	-	-
684996	Wire guard for 28W					EA	$32.19	$3.22	-	-
201559	Battery pack to suit 28W 5 x D cell					EA	$195.94	$19.59	-	-

L12 = 1200mm length

N New product | ECO Energy Saving products | More info available. See technical pages | COMING SOON Coming soon | Product to be discontinued

Whilst most items are stock lines some products are made to order. UoM = Unit Of Measure.
Prices are effective 1 June 2017 and are subject to change without notice. Trade prices exclude GST.

Emergency lighting & testing systems

Emergency luminaires

222435

222442

682268

Cat.Nos	T8 metal battens	C0	C90	C180	UoM	Trade price $	GST $	Box qty	Carton qty
	SPU - electronic ballast								
204008	Bare batten switched maintained 1 x 18W L6	D32	C32		EA	$473.07	$47.31	-	-
204010	Bare batten switched maintained 2 x 18W L6	D32	C40		EA	$509.26	$50.93	-	-
204011	Bare batten sustained 2 x 18W L6	D32	C40		EA	$525.32	$52.53	-	-
204012	Bare batten switched maintained 1 x 36W L12	D63	C63		EA	$492.09	$49.21	-	-
204014	Bare batten switched maintained 2 x 36W L12	D63	D20		EA	$564.46	$56.45	-	-
204015	Bare batten sustained 2 x 36W L12	D63	D20		EA	$584.96	$58.50	-	-
	SPU - magnetic ballast								
222423	Bare batten switched maintained 1 x 18W L6	D32	C32		EA	$340.15	$34.02	-	-
222426	Bare batten non-maintained 1 x 18W L6	D32	C32		EA	$297.03	$29.70	-	-
222435	Bare batten switched maintained 2 x 18W L6	D32	C40		EA	$375.95	$37.60	-	-
222439	Bare batten sustained 2 x 18W L6	D32	C40		EA	$371.41	$37.14	-	-
222429	Bare batten switched maintained 1 x 36W L12	D63	C63		EA	$363.68	$36.37	-	-
222432	Bare batten non-maintained 1 x 36W L12	D63	C63		EA	$337.97	$33.80	-	-
222442	Bare batten switched maintained 2 x 36W L12	D63	D20		EA	$432.34	$43.23	-	-
222445	Bare batten sustained 2 x 36W L12	D63	D20		EA	$445.86	$44.59	-	-
	Axiom® - electronic ballast								
682261	Bare batten switched maintained 1 x 18W L6	D32	C32		EA	P.O.A	-	-	-
682265	Bare batten switched maintained 2 x 18W L6	D32	C40		EA	P.O.A	-	-	-
682243	Bare batten sustained 2 x 18W L6	D32	C40		EA	P.O.A	-	-	-
682263	Bare batten switched maintained 1 x 36W L12	D63	C63		EA	P.O.A	-	-	-
682267	Bare batten switched maintained 2 x 36W L12	D63	D20		EA	P.O.A	-	-	-
682268	Bare batten sustained 2 x 36W L12	D63	D20		EA	P.O.A	-	-	-
	Accessories								
222075	Diffuser for 1 & 2 x 18W				EA	$63.04	$6.30	-	-
222077	Diffuser for 1 x 36W				EA	$75.68	$7.57	-	-
222076	Diffuser for 2 x 36W				EA	$84.52	$8.45	-	-
222580	Wire guard for 1 & 2 x 18W				EA	$51.32	$5.13	-	-
226760	Wire guard for 1 x 36W				EA	$76.81	$7.68	-	-
222581	Wire guard for 2 x 36W				EA	$76.81	$7.68	-	-
222023	Battery pack to suit 18W 3 x D cell				EA	$125.11	$12.51	-	-
222024	Battery pack to suit 36W 4 x D cell				EA	$167.07	$16.71	-	-

L6 = 600mm length, L12 = 1200mm length

N New product | ECO Energy Saving products | More info available. See technical pages | COMING SOON Coming soon | Product to be discontinued

Whilst most items are stock lines some products are made to order. UoM = Unit Of Measure.
Prices are effective 1 June 2017 and are subject to change without notice. Trade prices exclude GST.

Emergency lighting & testing systems

Emergency luminaires

685080

685050

685083

WP2 LED weatherproof

Cat.Nos	WP2 LED weatherproof battens	C0 C90 C180		UoM	Trade price $	GST $	Box qty	Carton qty
	SPU							
685050	Switched maintained 4000K GRP 2100lm L6 IP65	D80 D20	ECO +	EA	$535.50	$53.55	-	-
685080	Switched maintained 4000K GRP 4100lm L12 IP65	D160 D40	ECO +	EA	$612.00	$61.20	-	-
	SPU - with DIM sensor							
685053	Switched maintained 4000K GRP 2100lm L6 IP65	D80 D20	ECO +	EA	$654.49	$65.45	-	-
685083	Switched maintained 4000K GRP 4100lm L12 IP65	D160 D40	ECO +	EA	$765.00	$76.50	-	-
	SPU - with ON/OFF sensor							
685051	Switched maintained 4000K GRP 2100lm L6 IP65	D80 D20		EA	$569.50	$56.95	-	-
685081	Switched maintained 4000K GRP 4100lm L12 IP65	D160 D40		EA	$680.00	$68.00	-	-
	Axiom®							
685060	Switched maintained 4000K GRP 2100lm L6 IP65	D80 D20	ECO +	EA	P.O.A	-	-	-
685090	Switched maintained 4000K GRP 4100lm L12 IP65	D160 D40	ECO +	EA	P.O.A	-	-	-
	Axiom® - with DIM sensor							
685063	Switched maintained 4000K GRP 2100lm L6 IP65	D80 D20	ECO +	EA	P.O.A	-	-	-
685093	Switched maintained 4000K GRP 4100lm L12 IP65	D160 D40	ECO +	EA	P.O.A	-	-	-
	Axiom® - with ON/OFF sensor							
685061	Switched maintained 4000K GRP 2100lm L6 IP65	D80 D20		EA	P.O.A	-	-	-
685091	Switched maintained 4000K GRP 4100lm L6 IP65	D160 D40		EA	P.O.A	-	-	-
	DALI							
685050/D	Switched maintained 4000K GRP 2100lm L6 IP65	D100 C80	N ECO +	EA	P.O.A	-	-	-
685080/D	Switched maintained 4000K GRP 4100lm L12 IP65	D80 D20	N ECO +	EA	P.O.A	-	-	-
	Accessories							
686244	Battery pack 2x5 sub C for WP2L6. For WP2L12 order 2 x 686244 for non-DALI models			EA	$46.50	$4.65	-	-

L6 = 600mm length, L12 = 1200mm length

N New product | ECO Energy Saving products | + More info available. See technical pages | COMING SOON Coming soon | Product to be discontinued

Whilst most items are stock lines some products are made to order. UoM = Unit Of Measure.
Prices are effective 1 June 2017 and are subject to change without notice. Trade prices exclude GST.

Emergency lighting & testing systems

Emergency luminaires

685020

685018

685026

WP2 T8 & T5 weatherproof battens

Cat.Nos	WP2 T5 weatherproof battens	C0	C90	C180		UoM	Trade price $	GST $	Box qty	Carton qty
	SPU									
684937	Switched maintained 1 x 14W GRP L6 IP65	D50	C50			EA	$311.97	$31.20	-	-
684938	Switched maintained 2 x 14W GRP L6 IP65	D40	C50	D50		EA	$342.32	$34.23	-	-
684939	Switched maintained 1 x 28W GRP L12 IP65	D80	C80			EA	$526.71	$52.67	-	-
684940	Switched maintained 2 x 28W GRP L12 IP65	D63	C80	D80		EA	$540.49	$54.05	-	-
684941	Switched maintained 1 x 35W GRP L15 IP65	D125	D32			EA	$629.56	$62.96	-	-
	Axiom®									
684945	Switched maintained 1 x 14W GRP L6 IP65	D50	C50			EA	P.O.A	-	-	-
684946	Switched maintained 2 x 14W GRP L6 IP65	D40	C50	D50		EA	P.O.A	-	-	-
684947	Switched maintained 1 x 28W GRP L12 IP65	D80	C80			EA	P.O.A	-	-	-
684948	Switched maintained 2 x 28W GRP L12 IP65	D63	C80	D80		EA	P.O.A	-	-	-
684949	Switched maintained 1 x 35W GRP L15 IP65	D125	D32			EA	P.O.A	-	-	-
685000	Switched maintained 2 x 35W GRP L15 IP65	D125	D32	D100		EA	P.O.A	-	-	-
	Accessories									
222023	Battery pack to suit 14W 3 x D cell					EA	$125.11	$12.51	-	-
201559	Battery pack to suit 28W 5 x D cell					EA	$195.94	$19.59	-	-
222026	Battery pack to suit 35W 6 x D cell					EA	$250.80	$25.08	-	-

	WP2 T8 weatherproof battens									
	SPU									
685016	Switched maintained 1 x 18W GRP L6 IP65	D40	C50			EA	$329.50	$32.95	-	-
685018	Switched maintained 2 x 18W GRP L6 IP65	D25	C50	D50		EA	$342.32	$34.23	-	-
685019	Switched maintained 1 x 36W GRP L12 IP65	D80	C80			EA	$526.71	$52.67	-	-
685020	Switched maintained 2 x 36W GRP L12 IP65	D50	C80	D80		EA	$540.49	$54.05	-	-
685021	Switched maintained 1 x 58W GRP L15 IP65	D125	D32			EA	$625.02	$62.50	-	-
	Axiom®									
685023	Switched maintained 1 x 18W GRP L6 IP65	D40	C50			EA	P.O.A	-	-	-
685024	Switched maintained 2 x 18W GRP L6 IP65	D25	C50	D50		EA	P.O.A	-	-	-
685025	Switched maintained 1 x 36W GRP L12 IP65	D80	C80			EA	P.O.A	-	-	-
685026	Switched maintained 2 x 36W GRP L12 IP65	D50	C80	D80		EA	P.O.A	-	-	-
685027	Switched maintained 1x 58W GRP L15 IP65	D125	D32			EA	P.O.A	-	-	-
	Accessories									
222023	Battery pack to suit 18W 3 x D cell					EA	$125.11	$12.51	-	-
222024	Battery pack to suit 36W 4 x D cell					EA	$167.07	$16.71	-	-
222026	Battery pack to suit 58W 6 x D cell					EA	$250.80	$25.08	-	-

L6 = 600mm length, L12 = 1200mm length

N New product | ECO Energy Saving products | More info available. See technical pages | COMING SOON Coming soon | Product to be discontinued

Whilst most items are stock lines some products are made to order. UoM = Unit Of Measure.
Prices are effective 1 June 2017 and are subject to change without notice. Trade prices exclude GST.

Emergency lighting & testing systems

Emergency luminaires

682142

664164

664165

Cat.Nos	Oyster 310	C0	C90	C180		UoM	Trade price $	GST $	Box qty	Carton qty
	SPU									
682142	Switched maintained CFL 1 x 26W IP20	D20	D20			EA	$359.95	$36.00	-	-
	Axiom®									
682244	Switched maintained CFL 1 x 26W IP20	D25	D25			EA	P.O.A	-	-	-
	Accessories									
222024	Battery pack to suit 26W 4 x D cell					EA	$167.07	$16.71	-	-
	Bulkhead 360 LED									
	SPU									
664164	Switched maintained plain LED 1800lm 4000K IP65	D80	D80		ECO	EA	$547.05	$54.70	-	-
664165	Switched maintained guard LED 1600lm 4000K IP65	D80	D80		ECO	EA	$547.05	$54.70	-	-
	Axiom®									
664168	Switched maintained plain LED 1800lm 4000K IP65	D80	D80		ECO	EA	P.O.A	-	-	-
664169	Switched maintained guard LED 1600lm 4000K IP65	D80	D80		ECO	EA	P.O.A	-	-	-
	DALI									
664164/D	Switched maintained plain LED 1800lm 4000K IP65	D50	D50		N ECO	EA	P.O.A	-	-	-
664165/D	Switched maintained guard LED 1600lm 4000K IP65	D50	D50		N ECO	EA	P.O.A	-	-	-

N New product | ECO Energy Saving products | More info available. See technical pages | Coming soon | Product to be discontinued

Whilst most items are stock lines some products are made to order. UoM = Unit Of Measure.
Prices are effective 1 June 2017 and are subject to change without notice. Trade prices exclude GST.

Emergency lighting & testing systems

Power packs

664051

664053

Cat.Nos	Emergency power packs and batteries	UoM	Trade price $	GST $	Box qty	Carton qty
	SPU packs - T8					
664050	18W NiCd	EA	$280.50	$28.05	-	-
664051	36W NiCd	EA	$318.82	$31.88	-	-
682059	58W NiCd	EA	$351.10	$35.11	-	-
	SPU packs - T5					
664053	14W NiCd	EA	$218.86	$21.89	-	-
664054	28W NiCd	EA	$238.60	$23.86	-	-
664055	35W NiCd	EA	$252.02	$25.20	-	-
	Axiom® packs - T8					
682213	18W NiCd	EA	P.O.A	-	-	-
682215	36W NiCd	EA	P.O.A	-	-	-
682216	58W NiCd	EA	P.O.A	-	-	-
	Axiom® packs - T5					
682251	14W NiCd	EA	P.O.A	-	-	-
682217	28W NiCd	EA	P.O.A	-	-	-
682218	35W NiCd	EA	P.O.A	-	-	-

N New product | ECO Energy Saving products | More info available. See technical pages | COMING SOON Coming soon | Product to be discontinued

Whilst most items are stock lines some products are made to order. UoM = Unit Of Measure.
Prices are effective 1 June 2017 and are subject to change without notice. Trade prices exclude GST.

AXIOM® installation and WAC dimensions

Typical installation

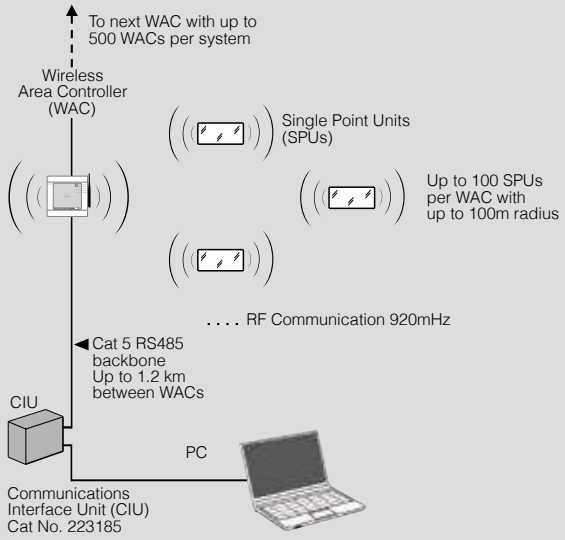

Add on installation:

- Commander / AXIOM®
- Extension to existing system

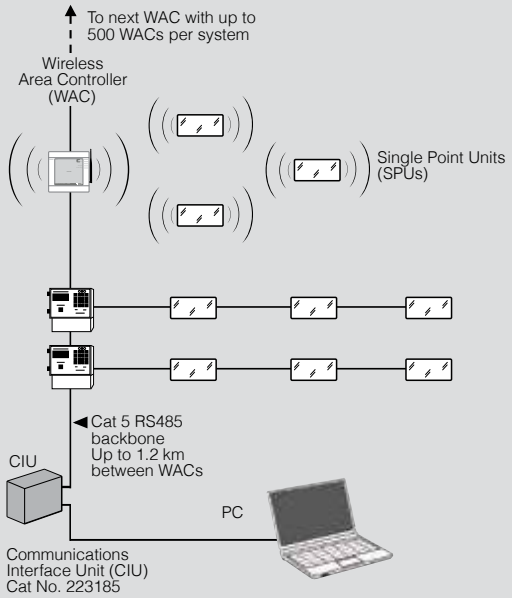

WAC dimensions

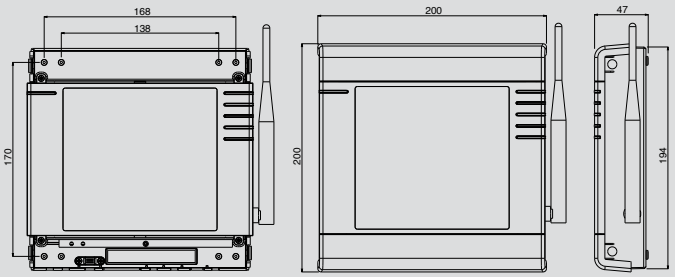

Hybrid installation

- Where wireless communication is limited

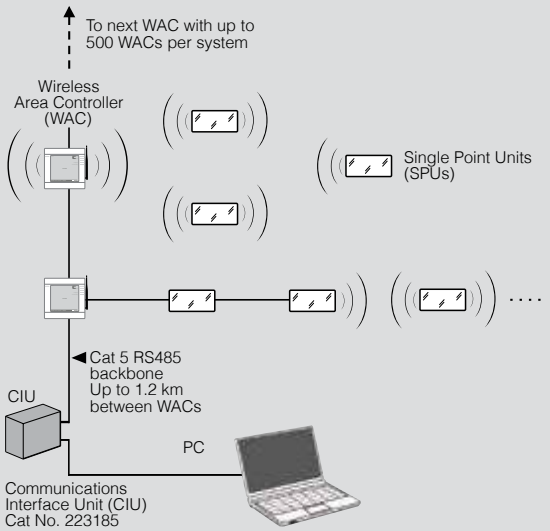

Multi-building site

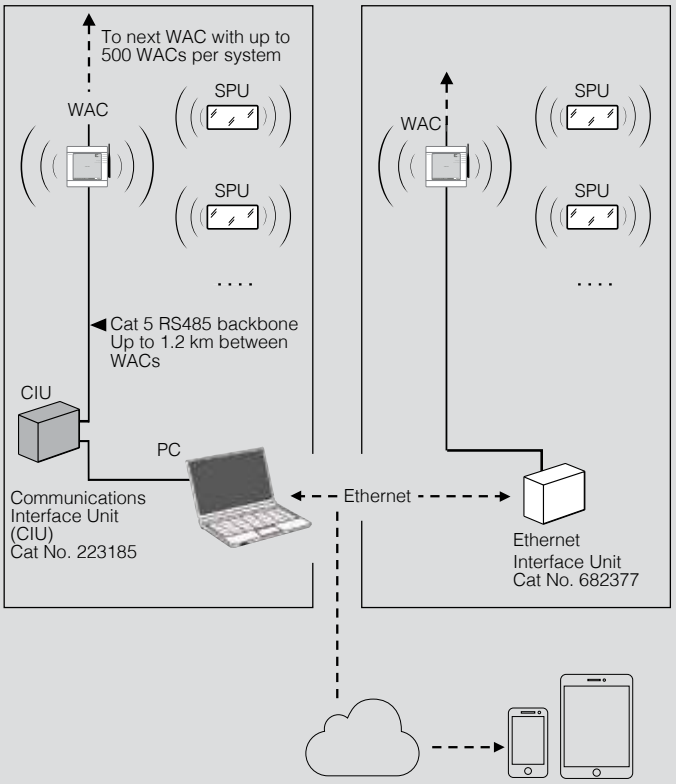

Test switch and circuit sensing module

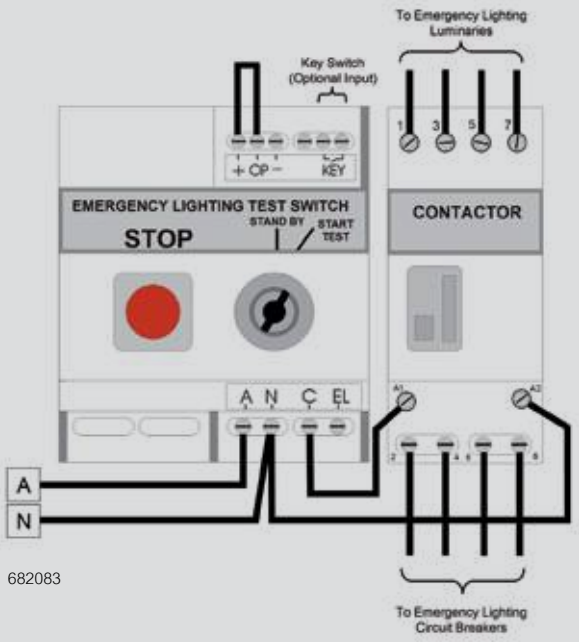

682083

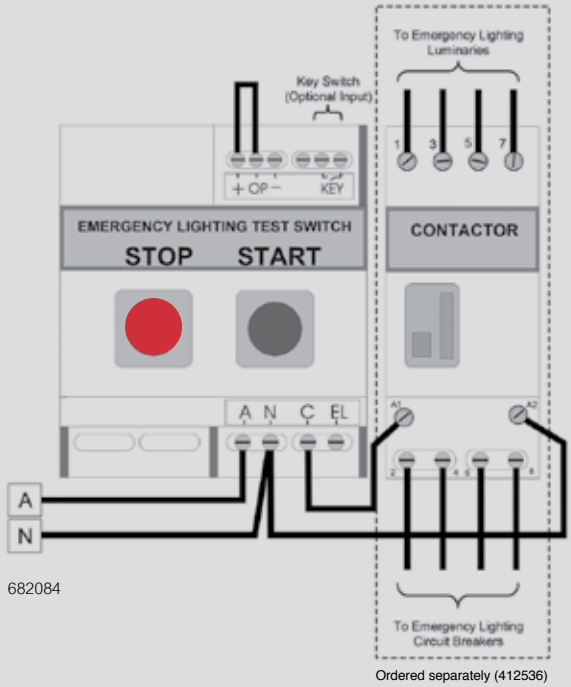

682084

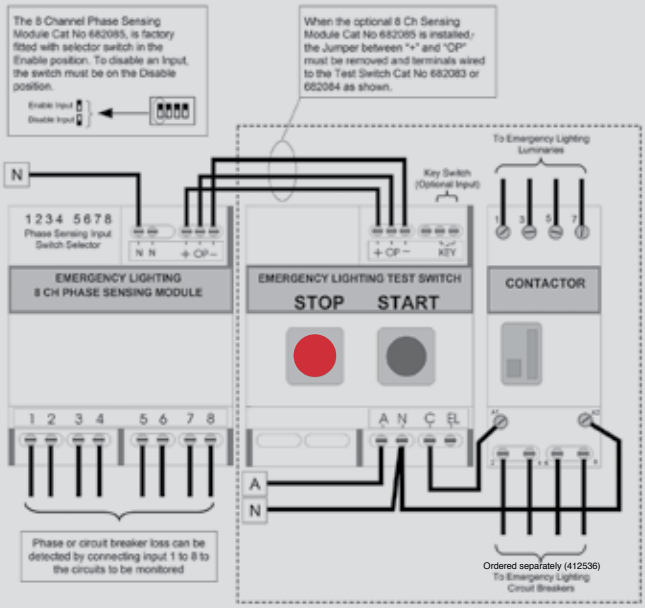

682085

E3™ LED Edgelight

Note: For complete luminaire order Power Pack and diffuser type.

Power Pack - for in-wall concealment	
Cat no.	**Specifications**
684437	E3 Power Pack; 3-pin flex and plug
684438	E3 AXIOM Power Pack; 3-pin flex and plug

Power Pack - for surface mounting	
Cat no.	**Specifications**
684443	Power pack - Silver
684444	Axiom Power pack - Silver

Dimensions

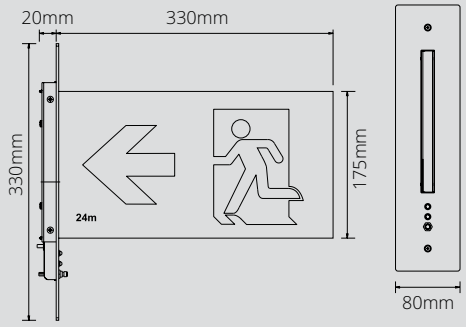

Diffusers + wall plate		
Cat no. Stainless Steel	**Description**	
684431	Diffuser - Single sided running man straight (left side mount)	
684432	Diffuser - Single sided running man left (left side mount)	
684433	Diffuser - Single sided running man right (right side mount)	
684439	Diffuser - Single sided running man straight (right side mount)	
684440	Diffuser - Single sided running man left (right side mount)	
684441	Diffuser - Single sided running man right (right side mount)	
684434	Diffuser - Double sided running man (left side mount)	
684435	Diffuser - Double sided running man arrow inwards (wall to left side mount)	
684436	Diffuser - Double sided running man arrow outwards (left side mount)	

Accessories	
Cat no.	**Specifications**
686240	Replacement battery pack (NiCd 4xAA cells) for non-DALI models

E2 LED edgelight

684731

684730

Dimensions

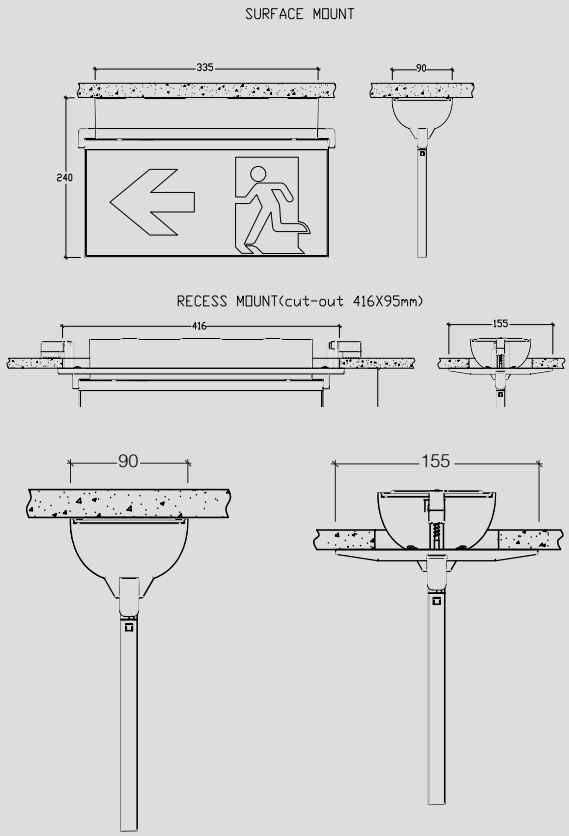

Surface

Recessed
Cut out: Refer installation instructions

Mounting block kit

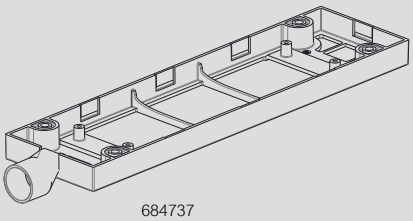

684737

Maximum spacing between luminaires

Classification (as per AS 2293.1.2005) \ Mounting height (meters)	2.4	2.7	3.0	3.3
C8	7.2	7.4	7.7	7.9
C10	7.7	8.0	8.3	8.6
C12.5	8.2	8.6	8.9	9.2
C16	8.8	9.3	9.7	10.0

Classification

SPU and AXIOM	C0 C10 C90 C12.5
DALI	C0 C8 C90 C16

G2 LED slide connect exit sign

686200

Dimensions

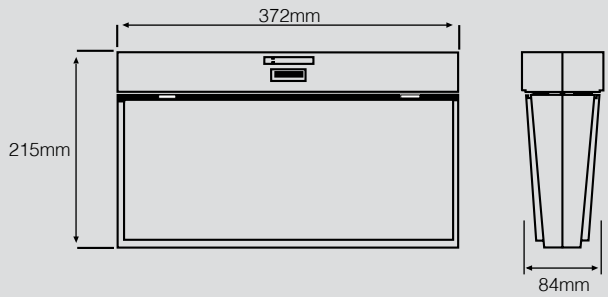

Maximum spacing between luminaires

Classification (as per AS 2293.1.2005) \ Mounting height (meters)	2.4	2.7	3	3.3
A1.25	2.4	2.2	1.9	1.3
C20	9.4	9.9	10.3	10.7
D1.25	3.8	3.4	2.9	2.0
D5	8.0	8.1	8.2	8.2
E1.6	4.8	4.8	4.4	4.0

Photometric report

Cat no.	Ceiling mount	
	C_0	C_{90}
SPU and Axiom	D1.25	A1.25
DALI	D5	C20

ER2 LED exit sign

684447

684449

Dimensions

Single sided (Wall mount)

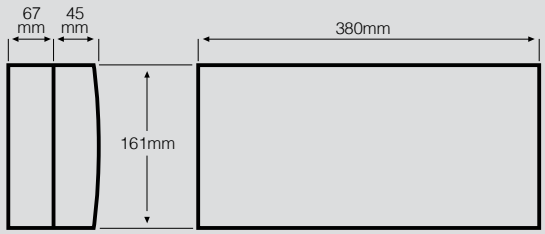

Double sided (Ceiling mount)

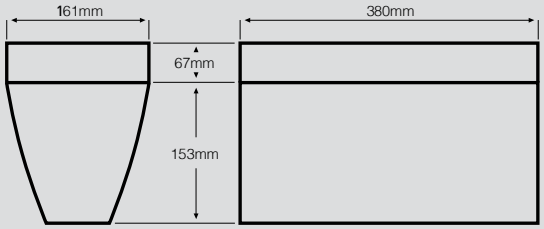

Maximum spacing between luminaires

Classification (as per AS 2293.1.2005) \ Mounting height (meters)	2.4	2.7	3.0	3.3
E 2.5	5.8	5.8	6.0	5.8

Large LED exit signs

684481

684486

Dimensions

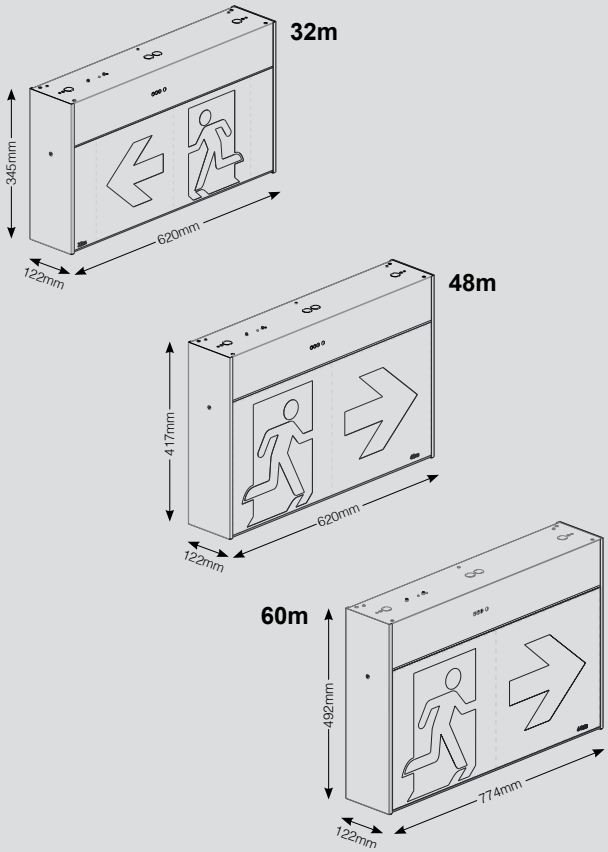

Flush wall bracket

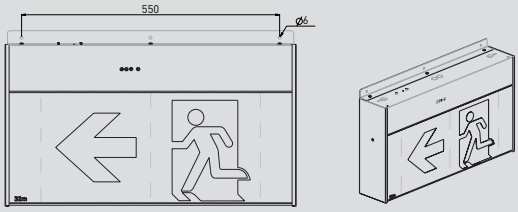

32m and 48m
Cat no. 684509

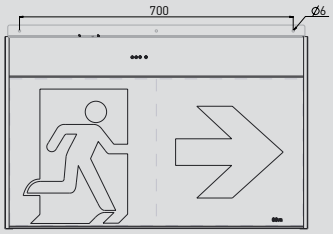

60m
Cat no. 684507

Wall bracket

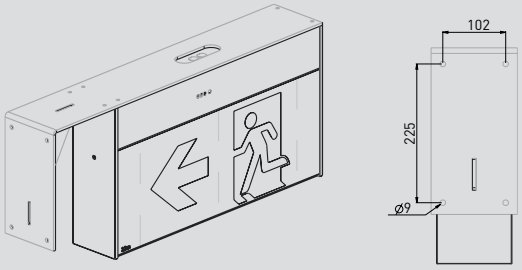

32m and 48m
Cat no. 684508

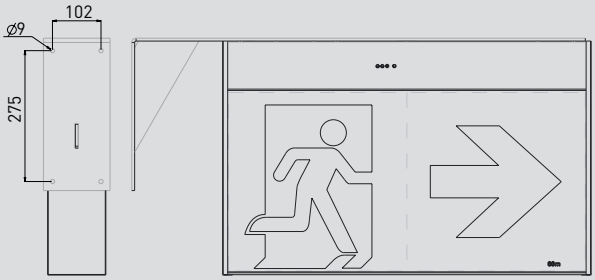

60m
Cat no. 684506

Weatherproof LED exit sign - IP65

684670

684650

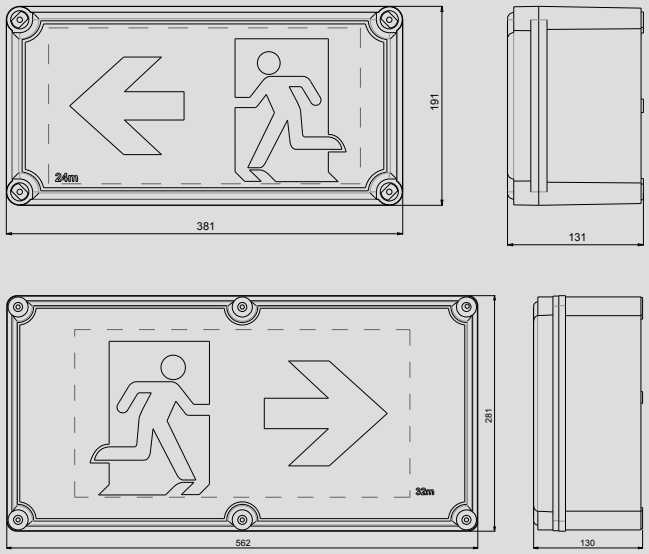

Maximum spacing between luminaires

Classification (as per AS 2293.1.2005) \ Mounting height (meters)	2.4	2.7	3.0	3.3
E 2.5	5.8	5.8	6.0	5.8
E 2	5.2	5.4	5.2	5.0

Rear mounting bracket

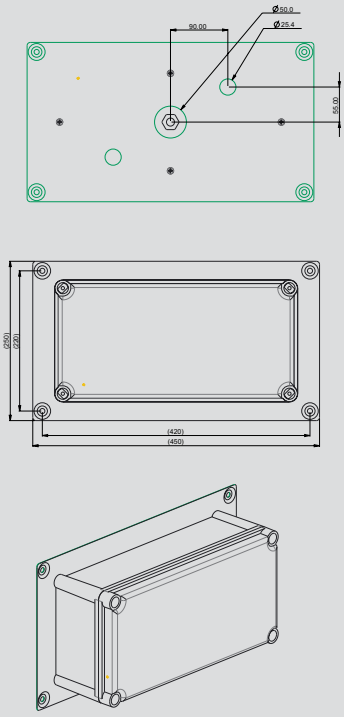

Side mounting bracket

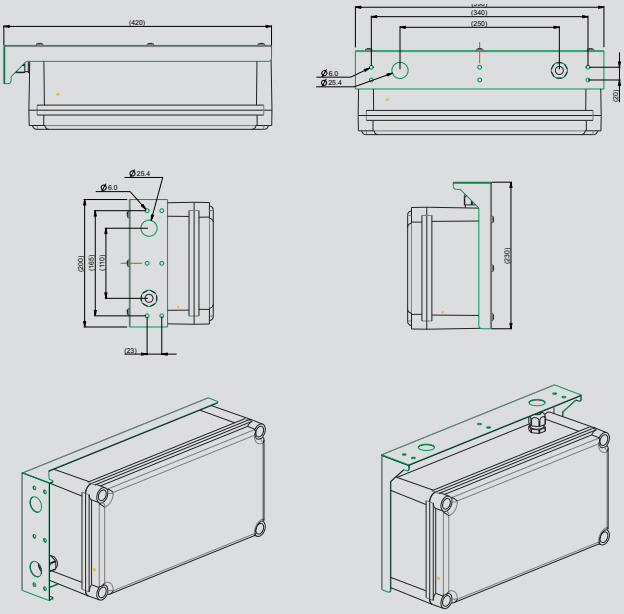

Ceiling mounting bracket

Emergency Lighting Super LED Satellite™

Wall bracket

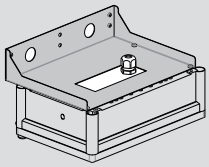

Rod suspension

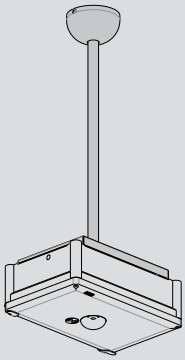

Wire suspension

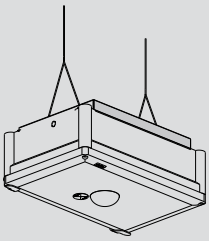

Dimensions

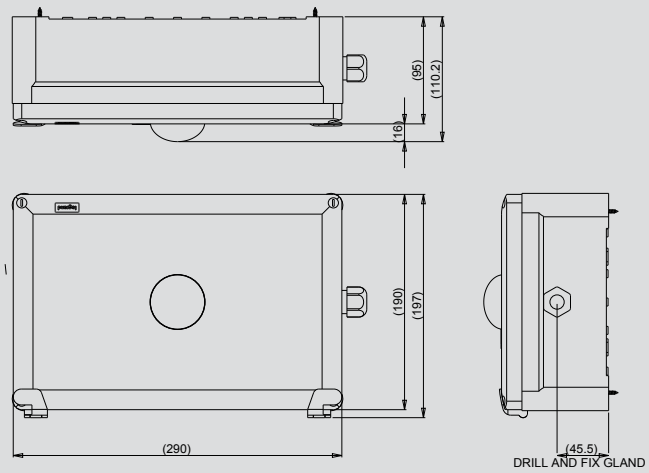

Cat No	Description
SPU	
685030	Super Satellite LED D100 IP65 Surface Mounting Grey
685031	Super Satellite LED D100 IP65 Surface Mounting Black
Axiom	
685032	Axiom Super Satellite LED D100 IP65 Surface Mounting Grey
685033	Axiom Super Satellite LED D100 IP65 Surface Mounting Black
Accessories	
686266	Suspension Rod Kit 1200mm length Grey
686267	Suspension Rod Kit 3000mm length Grey
686268	Suspension Rod Kit 1200mm length Black
686269	Suspension Rod Kit 3000mm length Black
685034	Suspension Wire Kit Grey
685035	Suspension Wire Kit Black
685036	Wall Bracket Grey
685037	Wall Bracket Black

Emergency lighting classification

Cat no.	Satellite recess mount C0/C90	Satellite surface mount C0/C90	Surface mount IP55 C0/C90	Surface mount freezer C0/C90
684850	D40/D40			
684852	D40/D40			
684850/D	D50/D50			
684852/D	D50/D50			
684853		D40/D40		
684854		D40/D40		
684853/D		D50/D50		
684854/D		D50/D50		
684855	D25/D25			
684860	D40/D40			
684862	D40/D40			
684863		D40/D40		
684864		D40/D40		
684875			D25/D25	
684878				D25/D25
684879			D25/D25	
684880				D25/D25

Emergency lighting classification table

Mounting height (mtrs)	2.4	2.7	3	3.3
D25	14.7	15.3	15.7	16.1
D40	17.4	18.0	18.6	19.1
D50	18.7	19.4	20.1	20.7

Product installation and dimensions

Ceiling cut out template

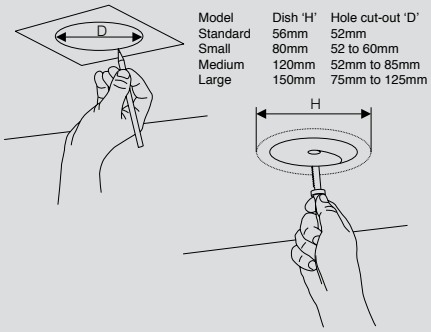

Model	Dish 'H'	Hole cut-out 'D'
Standard	56mm	52mm
Small	80mm	52 to 60mm
Medium	120mm	52mm to 85mm
Large	150mm	75mm to 125mm

Changing dish size

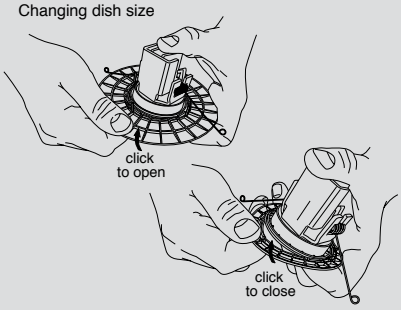

Recessed Installation

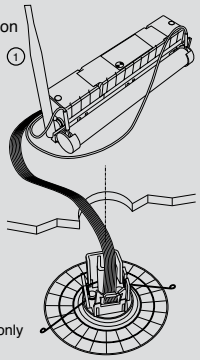

1 Axiom version only

Surface mount satellite
Box dimension 245 x 245 x 60mm

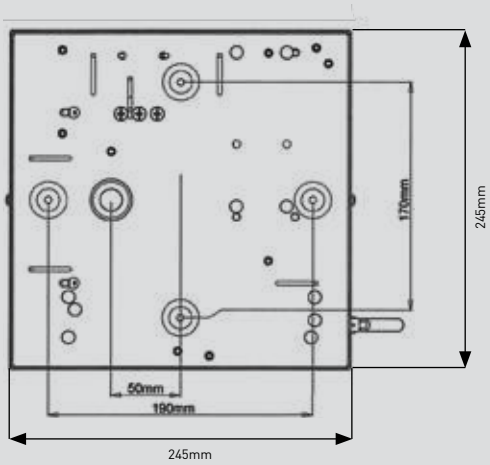

Power packs T5 and T8

664051

Power packs

Contains an electronic inverter and nickel cadmium batteries. 1.2V d.c. cells rated at 70°C. Power packs are for fluorescent or tungsten halogen 6V a.c. 10W incandescent lamp. Self-contained emergency power packs are to upgrade existing fluorescent luminaires for appliance with statutory safety regulations. The electronic control pack is supplied in new slimline profile metal can with: only 32mm height to suit low profile design version. Cater for most applications light fitting into a emergency light fitting in a non-maintained, maintained or sustained mode. Battery pack is supplied in slim version.

Product dimensions

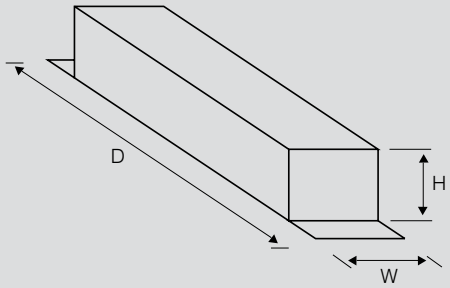

Technical characteristics

Emergency type	Lamp type	Wattage	Cat no.	Dimensions W x H x D (mm)	Replacement battery
Standalone	T8	18W	664050	48 x 32 x 225	222023
		36W	664051		222024
		58W	682059		222026
	T5	14W	664053	31 x 31 x 344	222023
		28W	664054		201559
		35W	664055		222026
Axiom	T8	18W	682213	40 x 43 x 278	222023
		36W	682215		222024
		58W	682216		222026
	T5	14W	682251		222023
		28W	682217		201559
		35W	682218		222026

Replacement battery Cat no.	No. of 'D' cells	Battery dimensions W x H x D (mm)
222023	3	35 x 35 x 210
222024	4	35 x 35 x 270
222026	6	35 x 35 x 409
201559	5	35 x 35 x 330

COMMERCIAL LIGHTING

Indoor Luminaires

P. 358
EduLED

Industrial Luminaires

P. 361
Vortex LED Highbays

Outdoor Luminaires

P. 365
Bulkheads
LED 265

Lighting Management

P. 366
Motion Sensors

FEATURED PRODUCTS

Luminess LED Flat Panel
(p. 358)

Vortex LED Highbays
(p. 361)

P. 358
Luminess LED
Flat Panel

P. 359
T5 metal
Battens

P. 359
T8 metal
Battens

P. 360
Oysters

P. 361
WP2 LED
Weatherproof
Battens

P. 362
WP2 T5
Weatherproof Battens

P. 363
WP2 T8
Weatherproof Battens

P. 365
Bulkheads
LED 360

P. 367
Accessories

LED Bulkheads

(p. 365)

Commercial lighting

Indoor luminaires

682450

682400

682402

682403

Luminess LED flat panel

Cat.Nos	EduLED	UoM	Trade price $	GST $	Box qty	Carton qty
	Mains					
682450	LED 1200x200 4000lm 4000K (N, ECO, COMING SOON)	EA	P.O.A	-	-	-
	Mains - DALI					
682450D	LED 1200x200 4000lm 4000K (N, ECO, COMING SOON)	EA	P.O.A	-	-	-
	Luminess LED flat panel					
	Mains					
682400	LED 600 x 300 2400lm 4000K flex & plug (ECO)	EA	$195.50	$19.55	-	-
682401	LED 600 x 600 3200lm 4000K flex & plug (ECO)	EA	$195.50	$19.55	-	-
682402	LED 1200 x 300 200lm 4000K flex & plug (ECO)	EA	$195.50	$19.55	-	-
682403	LED 1200 x 600 3800lm 4000K flex & plug (ECO)	EA	$306.00	$30.60	-	-
	Mains - DALI					
682400D	LED 600 x 300 2400lm 4000K flex & plug (ECO)	EA	P.O.A	-	-	-
682401D	LED 600 x 600 3200lm 4000K flex & plug (ECO)	EA	P.O.A	-	-	-
682402D	LED 1200 x 300 3200lm 4000K flex & plug (ECO)	EA	P.O.A	-	-	-
682403D	LED 1200 x 600 3800lm 4000K flex & plug (ECO)	EA	P.O.A	-	-	-
	Accessories					
682420	Plaster frame 600 x 300	EA	$83.36	$8.34	-	-
682421	Plaster frame 600 x 600	EA	$100.73	$10.07	-	-
682422	Plaster frame 1200 x 300	EA	$93.78	$9.38	-	-
682423	Plaster frame 1200 x 600	EA	$111.15	$11.12	-	-
682424	Surface mount kit 600 x 300	EA	$86.83	$8.68	-	-
682425	Surface mount kit 600 x 600	EA	$86.83	$8.68	-	-
682426	Surface mount kit 1200 x 300	EA	$86.83	$8.68	-	-
682427	Surface mount kit 1200 x 600	EA	$138.93	$13.89	-	-

N New product | ECO Energy Saving products | More info available. See technical pages | COMING SOON Coming soon | Product to be discontinued

Whilst most items are stock lines some products are made to order. UoM = Unit Of Measure.
Prices are effective 1 June 2017 and are subject to change without notice. Trade prices exclude GST.

Commercial lighting

Indoor luminaires

222435

222442

684973

Cat.Nos	T5 metal battens	C0	C90	C180	UoM	Trade price $	GST $	Box qty	Carton qty
	Mains								
684987	Bare batten 1 x 14W L6				EA	$110.68	$11.07	-	-
684971	Bare batten 2 x 14W L6				EA	$149.42	$14.94	-	-
684990	Bare batten 1 x 28W L12				EA	$183.65	$18.37	-	-
684973	Bare batten 2 x 28W L12				EA	$137.47	$13.75	-	-
	SPU								
684954	Bare batten switched maintained 1 x 28W L12	D63	D20		EA	$282.71	$28.27	-	-
684956	Bare batten switched maintained 2 x 28W L12	D63	D20	D63	EA	$290.46	$29.05	-	-
	Axiom®								
684964	Bare batten switched maintained 1 x 28W L12	D80	D25		EA	P.O.A	-	-	-
684966	Bare batten switched maintained 2 x 28W L12	D80	D25	D80	EA	P.O.A	-	-	-
	Accessories								
684984	Diffuser for 14W				EA	$23.01	$2.30	-	-
684986	Diffuser for 28W				EA	$32.19	$3.22	-	-
684994	Wire guard for 14W				EA	$23.01	$2.30	-	-
684996	Wire guard for 28W				EA	$32.19	$3.22	-	-
222023	Battery pack to suit 14W 3 x D cell				EA	$125.11	$12.51	-	-
201559	Battery pack to suit 28W 5 x D cell				EA	$195.94	$19.59	-	-
	T8 metal battens								
	SPU - electronic ballast								
204008	Bare batten switched maintained 1 x 18W L6	D32	C32		EA	$473.07	$47.31	-	-
204010	Bare batten switched maintained 2 x 18W L6	D32	C40		EA	$509.26	$50.93	-	-
204011	Bare batten sustained 2 x 18W L6	D32	C40		EA	$525.32	$52.53	-	-
204012	Bare batten switched maintained 1 x 36W L12	D63	C63		EA	$492.09	$49.21	-	-
204014	Bare batten switched maintained 2 x 36W L12	D63	D20		EA	$564.46	$56.45	-	-
204015	Bare batten sustained 2 x 36W L12	D63	D20		EA	$584.96	$58.50	-	-
	SPU - magnetic ballast								
222423	Bare batten switched maintained 1 x 18W L6	D32	C32		EA	$340.15	$34.02	-	-
222426	Bare batten non-maintained 1 x 18W L6	D32	C32		EA	$297.03	$29.70	-	-
222435	Bare batten switched maintained 2 x 18W L6	D32	C40		EA	$375.95	$37.60	-	-
222439	Bare batten sustained 2 x 18W L6	D32	C40		EA	$371.41	$37.14	-	-
222429	Bare batten switched maintained 1 x 36W L12	D63	C63		EA	$363.68	$36.37	-	-
222432	Bare batten non-maintained 1 x 36W L12	D63	C63		EA	$337.97	$33.80	-	-

L6 = 600mm length, L12 = 1200mm length

N New product | ECO Energy Saving products | More info available. See technical pages | COMING SOON Coming soon | Product to be discontinued

Whilst most items are stock lines some products are made to order. UoM = Unit Of Measure.
Prices are effective 1 June 2017 and are subject to change without notice. Trade prices exclude GST.

222442

682265

682267

684424

682142

Cat.Nos	T8 metal battens	C0	C90	C180		UoM	Trade price $	GST $	Box qty	Carton qty
	SPU - magnetic ballast									
222442	Bare batten switched maintained 2 x 36W L12	D63	D20			EA	$432.34	$43.23	-	-
222445	Bare batten sustained 2 x 36W L12	D63	D20			EA	$445.86	$44.59	-	-
	Axiom® - electronic ballast									
682261	Bare batten switched maintained 1 x 18W L6	D32	C32			EA	P.O.A	-	-	-
682265	Bare batten switched maintained 2 x 18W L6	D32	C40			EA	P.O.A	-	-	-
682243	Bare batten sustained 2 x 18W L6	D32	C40			EA	P.O.A	-	-	-
682263	Bare batten switched maintained 1 x 36W L12	D63	C63			EA	P.O.A	-	-	-
682267	Bare batten switched maintained 2 x 36W L12	D63	D20			EA	P.O.A	-	-	-
682268	Bare batten sustained 2 x 36W L12	D63	D20			EA	P.O.A	-	-	-
	Accessories									
222075	Diffuser for 1 & 2 x 18W					EA	$63.04	$6.30	-	-
222077	Diffuser for 1 x 36W					EA	$75.68	$7.57	-	-
222076	Diffuser for 2 x 36W					EA	$84.52	$8.45	-	-
222580	Wire guard for 1 & 2 x 18W					EA	$51.32	$5.13	-	-
226760	Wire guard for 1 x 36W					EA	$76.81	$7.68	-	-
222581	Wire guard for 2 x 36W					EA	$76.81	$7.68	-	-
222023	Battery pack to suit 18W 3 x D cell					EA	$125.11	$12.51	-	-
222024	Battery pack to suit 36W 4 x D cell					EA	$167.07	$16.71	-	-
	Oyster 280									
	Mains									
684424	LED 15W 4000K PC IP20				ECO	EA	$165.22	$16.52	-	-
	Oyster 310									
	SPU									
682142	Switched maintained CFL 1 x 26W IP20	D20	D20			EA	$359.95	$36.00	-	-
	Axiom									
682244	Switched maintained CFL 1 x 26W IP20	D25	D25			EA	P.O.A	-	-	-
	Accessories									
222024	Battery pack to suit 26W 4 x D cell					EA	$167.07	$16.71	-	-

L6 = 600mm length, L12 = 1200mm length

N New product | ECO Energy Saving products | More info available. See technical pages | COMING SOON Coming soon | Product to be discontinued

Whilst most items are stock lines some products are made to order. UoM = Unit Of Measure.
Prices are effective 1 June 2017 and are subject to change without notice. Trade prices exclude GST.

Commercial lighting

Industrial luminaires

685040

685070

684930

684700

Cat.Nos	Vortex LED highbay	C0 C90 C180		UoM	Trade price $	GST $	Box qty	Carton qty
	Mains							
684700	LED 17800 lm 5700K wide non-dim flex & plug	IPART approved	ECO	EA	$808.33	$80.83	-	-
	WP2 LED weatherproof battens							
	Mains							
685040	4000K GRP 2100lm L6 IP65		ECO +	EA	$321.08	$32.11	-	-
685070	4000K GRP 4100lm L12 IP65		ECO +	EA	$405.52	$40.55	-	-
	Mains - DALI							
685042	4000K GRP 2100lm L6 IP65		ECO +	EA	P.O.A	-	-	-
685072	4000K GRP 4100lm L12 IP65		ECO +	EA	P.O.A	-	-	-
	Mains - with DIM sensor							
685043	4000K GRP 2100lm L6 IP65		ECO +	EA	$416.50	$41.65	-	-
685073	4000K GRP 4100lm L12 IP65		ECO +	EA	$524.61	$52.46	-	-
	Mains - with ON/OFF sensor							
685041	4000K GRP 2100lm L6 IP65		ECO	EA	$331.50	$33.15	-	-
685071	4000K GRP 4100lm L12 IP65		ECO	EA	$442.00	$44.20	-	-
	SPU							
685050	Switched maintained 4000K GRP 2100lm L6 IP65	D80 D20	ECO +	EA	$535.50	$53.55	-	-
685080	Switched maintained 4000K GRP 4100lm L12 IP65	D160 D40	ECO +	EA	$612.00	$61.20	-	-
	SPU - with DIM sensor							
685053	Switched maintained 4000K GRP 2100lm L6 IP65	D80 D20	ECO +	EA	$654.49	$65.45	-	-
685083	Switched maintained 4000K GRP 4100lm L12 IP65	D160 D40	ECO +	EA	$765.00	$76.50	-	-
	SPU - with ON/OFF sensor							
685051	Switched maintained 4000K GRP 2100lm L6 IP65	D80 D20	ECO	EA	$569.50	$56.95	-	-
685081	Switched maintained 4000K GRP 4100lm L12 IP65	D160 D40	ECO	EA	$680.00	$68.00	-	-
	Axiom®							
685060	Switched maintained 4000K GRP 2100lm L6 IP65	D80 D20	ECO +	EA	P.O.A	-	-	-
685090	Switched maintained 4000K GRP 4100lm L12 IP65	D160 D40	ECO +	EA	P.O.A	-	-	-
	Axiom® - with DIM sensor							
685063	Switched maintained 4000K GRP 2100lm L6 IP65	D80 D20	ECO +	EA	P.O.A	-	-	-
685093	Switched maintained 4000K GRP 4100lm L12 IP65	D160 D40	ECO +	EA	P.O.A	-	-	-
	Axiom® - with ON/OFF sensor							
685061	Switched maintained 4000K GRP 2100lm L6 IP65	D80 D20	ECO	EA	P.O.A	-	-	-
685091	Switched maintained 4000K GRP 4100lm L12 IP65	D160 D40	ECO	EA	P.O.A	-	-	-

L6 = 600mm length, L12 = 1200mm length., L15 = 1500mm length

N New product | ECO Energy Saving products | + More info available. See technical pages | COMING SOON Coming soon | ✕ Product to be discontinued

Whilst most items are stock lines some products are made to order. UoM = Unit Of Measure.
Prices are effective 1 June 2017 and are subject to change without notice. Trade prices exclude GST.

WP2 LED & T5 weatherproof battens

684932

Cat.Nos	WP2 LED weatherproof battens	C0	C90	C180		UoM	Trade price $	GST $	Box qty	Carton qty
	DALI									
685050/D	Switched maintained 4000K GRP 2100lm L6 IP65				N ECO	EA	P.O.A	-	-	-
685080/D	Switched maintained 4000K GRP 4100lm L12 IP65				N ECO	EA	P.O.A	-	-	-
	Accessories									
686244	Battery pack 2 x 5 sub C. For WP2L6 for WP2L12 order 2 x 686244 for non-DALI models						$46.50	$4.65	-	-
	WP2 T5 weatherproof battens									
	Mains									
684929	1 x 14W GRP L6 IP65					EA	$178.18	$17.82	-	-
684930	2 x 14W GRP L6 IP65					EA	$189.53	$18.95	-	-
684931	1 x 28W GRP L12 IP65					EA	$206.58	$20.66	-	-
684932	2 x 28W GRP L12 IP65					EA	$217.86	$21.79	-	-
684933	1 x 35W GRP L15 IP65					EA	$238.99	$23.90	-	-
684934	2 x 35W GRP L15 IP65					EA	$250.29	$25.03	-	-

L6 = 600mm length, L12 = 1200mm length., L15 = 1500mm length

N New product | ECO Energy Saving products | More info available. See technical pages | COMING SOON Coming soon | Product to be discontinued

Whilst most items are stock lines some products are made to order. UoM = Unit Of Measure.
Prices are effective 1 June 2017 and are subject to change without notice. Trade prices exclude GST.

684940

684948

685020

Cat.Nos	WP2 T5 weatherproof battens	C0	C90	C180		UoM	Trade price $	GST $	Box qty	Carton qty
	SPU									
684937	Switched maintained 1 x 14W GRP L6 IP65	D50	C50			EA	$311.97	$31.20	-	-
684938	Switched maintained 2 x 14W GRP L6 IP65	D40	C50	D50		EA	$342.32	$34.23	-	-
684939	Switched maintained 1 x 28W GRP L12 IP65	D80	C80			EA	$526.71	$52.67	-	-
684940	Switched maintained 2 x 28W GRP L12 IP65	D63	C80	D80		EA	$540.49	$54.05	-	-
684941	Switched maintained 1 x 35W GRP L15 IP65	D125	D32			EA	$629.56	$62.96	-	-
684942	Switched maintained 2 x 35W GRP L15 IP65	D125	D32	D100		EA	$502.00	$50.20	-	-
	Axiom®									
684945	Switched maintained 1 x 14W GRP L6 IP65	D50	C50			EA	P.O.A	-	-	-
684946	Switched maintained 2 x 14W GRP L6 IP65	D40	C50	D50		EA	P.O.A	-	-	-
684947	Switched maintained 1 x 28W GRP L12 IP65	D80	C80			EA	P.O.A	-	-	-
684948	Switched maintained 2 x 28W GRP L12 IP65	D63	C80	D80		EA	P.O.A	-	-	-
684949	Switched maintained 1 x 35W GRP L15 IP65	D125	D32			EA	P.O.A	-	-	-
685000	Switched maintained 2 x 35W GRP L15 IP65	D125	D32	D100		EA	P.O.A	-	-	-
	Accessories									
222023	Battery pack to suit 14W 3 x D cell					EA	$125.11	$12.51	-	-
201559	Battery pack to suit 28W 5 x D cell					EA	$195.94	$19.59	-	-
222026	Battery pack to suit 35W 6 x D cell					EA	$250.80	$25.08	-	-

	WP2 T8 weatherproof battens									
	Mains									
685010	1 x 18W GRP L6 IP65					EA	$178.18	$17.82	-	-
685011	2 x 18W GRP L6 IP65					EA	$189.53	$18.95	-	-
685012	1 x 36W GRP L12 IP65					EA	$206.58	$20.66	-	-
685013	2 x 36W GRP L12 IP65					EA	$217.86	$21.79	-	-
685014	1x58W GRP L15 IP65					EA	$248.03	$24.80	-	-
685015	2x58W GRP L15 IP65					EA	$257.06	$25.71	-	-
	SPU									
685016	Switched maintained 1 x 18W GRP L6 IP65	D40	C50			EA	$329.50	$32.95	-	-
685018	Switched maintained 2 x 18W GRP L6 IP65	D25	C50	D50		EA	$342.32	$34.23	-	-
685019	Switched maintained 1 x 36W GRP L12 IP65	D80	C80			EA	$526.71	$52.67	-	-
685020	Switched maintained 2 x 36W GRP L12 IP65	D50	C80	D80		EA	$540.49	$54.05	-	-
685021	Switched maintained 1 x 58W GRP L15 IP65	D125	C32			EA	$625.02	$62.50	-	-

L6 = 600mm length, L12 = 1200mm length, L15 = 1500mm, GRP = Glass Reinforced Plastic

N New product | ECO Energy Saving products | More info available. See technical pages | Coming soon | Product to be discontinued

Whilst most items are stock lines some products are made to order. UoM = Unit Of Measure.
Prices are effective 1 June 2017 and are subject to change without notice. Trade prices exclude GST.

WP2 T5 & T8
weatherproof battens

Cat.Nos	WP2 T8 weatherproof battens	C0	C90	C180		UoM	Trade price $	GST $	Box qty	Carton qty
	Axiom®									
685023	Switched maintained 1 x 18W GRP L6 IP65	D40	C50			EA	P.O.A	-	-	-
685024	Switched maintained 2 x 18W GRP L6 IP65	D25	C50	D50		EA	P.O.A	-	-	-
685025	Switched maintained 1 x 36W GRP L12 IP65	D80	C80			EA	P.O.A	-	-	-
685026	Switched maintained 2 x 36W GRP L12 IP65	D50	C80	D80		EA	P.O.A	-	-	-
685027	Switched maintained 1 x 58W GRP L15 IP65	D125	D32			EA	P.O.A	-	-	-
	Accessories									
222023	Battery pack to suit 18W 3 x D cell					EA	$125.11	$12.51	-	-
222024	Battery pack to suit 36W 4 x D cell					EA	$167.07	$16.71	-	-
222026	Battery pack to suit 58W 6 x D cell					EA	$250.80	$25.08	-	-

L6 = 600mm length, L12 = 1200mm length, L15 = 1500mm, GRP = Glass Reinforced Plastic

Commercial lighting

Outdoor luminaires

664160

664161

664162

616

Cat.Nos	Bulkhead 265 LED	C0	C90	C180		UoM	Trade price $	GST $	Box qty	Carton qty
	Mains									
664172	Plain LED 1800lm 4000K IP65				ECO	EA	$191.03	$19.10	-	-
664173	Guard LED 1600lm 4000K IP65				ECO	EA	$191.03	$19.10	-	-
664174	Eyelid LED 900lm 4000K IP65				ECO	EA	$191.03	$19.10	-	-
	Bulkhead 360 LED									
	Mains									
664160	Plain LED 1800lm 4000K IP65				ECO	EA	$286.55	$28.66	-	-
664161	Guard LED 1600lm 4000K IP65				ECO	EA	$286.55	$28.66	-	-
664162	Eyelid LED 900lm 4000K IP65				ECO	EA	$286.55	$28.66	-	-
	SPU									
664164	Switched maintained plain LED 1800lm 4000K IP65	D80	D80		ECO	EA	$547.05	$54.70	-	-
664165	Switched maintained guard LED 1600lm 4000K IP65	D80	D80		ECO	EA	$547.05	$54.70	-	-
	Axiom®							-		
664168	Switched maintained plain LED 1800lm 4000K IP65	D80	D80		ECO	EA	P.O.A	-	-	-
664169	Switched maintained guard LED 1600lm 4000K IP65	D80	D80		ECO	EA	P.O.A	-	-	-
	DALI									
664164/D	Switched maintained plain LED 1800lm 4000K IP65	D50	D50		N ECO	EA	P.O.A	-	-	-
664165/D	Switched maintained guard LED 1600lm 4000K IP65	D50	D50		N ECO	EA	P.O.A	-	-	-
	Bulkhead Aqua series									
	Mains									
616	Bulkhead light BC 100W Ø235 IP33 white base clear diffuser					EA	$72.43	$7.24	-	18

N New product | ECO Energy Saving products | More info available. See technical pages | COMING SOON Coming soon | Product to be discontinued

Whilst most items are stock lines some products are made to order. UoM = Unit Of Measure.
Prices are effective 1 June 2017 and are subject to change without notice. Trade prices exclude GST.

Lighting Management

Motion sensor for one circuit

048941

488TRI3W

48807

48817

48932

48933

Cat.Nos	Sensors for passageways without natural light	UoM	Trade price $	GST $	Box qty	Carton qty
	Wall surface mounted					
048942	PIR occupancy all load 3 wire IP42 240V a.c. 8m 1-1000lx 5s-30mn td	EA	$168.39	$16.84	-	10
	Ceiling mounted					
048941	PIR occupancy all load 3 wire IP41 240V a.c. Ø8m 10-1275lx 10s-10mn td	EA	$165.45	$16.54	-	10
	Sensor PIR + Microwave + Photoelectric for outdoor and damp areas					
	Wall surface mounted					
488TRI3W	Occupancy all load 3 wire with override IP66 240V a.c. 8m 10lx-full sun 8s-15mn td	EA	$176.20	$17.62	-	20
	Sensors for passageways with natural light					
	Ceiling mounted					
48807	PIR vacancy/occupancy all load 3 wire with override IP20 240V a.c. Ø8m	EA	$215.50	$21.55	-	10
48817	PIR occupancy all load 3 wire with override IP20 240V a.c. 2x12m 5-1275lx 5s-59mn td	EA	$233.46	$23.35	-	-
	Sensors for outdoor and damp areas					
	Wall or ceiling mounted					
48933	PIR occupancy all load 3 wire with override IP55 240V a.c. 20m 5-1275lx 5s-59mn td	EA	$241.61	$24.16	-	-
	Ceiling mounted - ideal for high ceiling areas					
48932	PIR occupancy all load 3 wire with override IP55 240V a.c. Ø8-20m 5-1275lx 5s-59mn td	EA	$254.79	$25.48	-	-
	Sensors for work areas					
	Ceiling mounted					
48806	Dual vacancy/occupancy all load 3 wire with override IP20 240V a.c. Ø8m	EA	$396.22	$39.62	-	10
	Wall surface mounted					
48916	Dual vacancy/occupancy all load 3 wire IP42 240V a.c. 8m	EA	$336.56	$33.66	-	-

N New product | ECO Energy Saving products | More info available. See technical pages | Coming soon | Product to be discontinued

Whilst most items are stock lines some products are made to order. UoM = Unit Of Measure.
Prices are effective 1 June 2017 and are subject to change without notice. Trade prices exclude GST.

Lighting Management

Motion sensor for one circuit and brackets

078452

48804

88235

PE170R2

88230

48875

Cat.Nos	Sensors for offices	UoM	Trade price $	GST $	Box qty	Carton qty
	Wall mounted in Arteor/Excel Life/Como grids					
078452	Dual all load 3 wire with override IP20 240V a.c. 8m	EA	$349.60	$34.96	-	-
	Sensors for individual office					
	Ceiling mounted					
48804	PIR Occupancy all load 3 wire IP20 240V a.c. Ø8m	EA	$175.39	$17.54	-	-
	Light sensitive switches IP56 - HPM					
PE170/10	Light sensitive switch 2400W 3 wire IP56 10A 240V a.c. grey	EA	$123.23	$12.32	-	60
PE170R2	Light sensitive switch 5-2000Lux 2400W 3 wire IP56 10A 240V a.c. program off at 30mn steps grey	EA	$132.54	$13.25	-	60
	Accessories					
	Remote control configuration tool					
88230	Lux/delay/sensitivity digital programming for sensors settings & config/room	EA	$287.24	$28.72	-	40
88235	Lux/delay/sensitivity step programming	EA	$75.83	$7.58	-	60
	Surface mount boxes					
48875	Surface mount installation box for 48803/48806/48817	EA	$30.58	$3.06	4	112
	Bracket					
48971	Fixing accessory for surface mount sensors 48911/48916	EA	$17.78	$1.78	4	112

N New product | ECO Energy Saving products | More info available. See technical pages | Coming soon | Product to be discontinued

Whilst most items are stock lines some products are made to order. UoM = Unit Of Measure.
Prices are effective 1 June 2017 and are subject to change without notice. Trade prices exclude GST.

WP2 LED weatherproof batten IP65 – mains

685040

685070

Dimensions

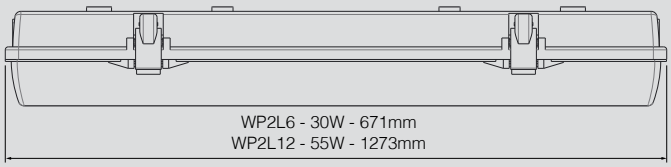

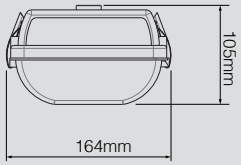

Technical characteristics

Cat no.	685040	685070
Description	WP2L6 LED batten 4K mains	WP2L12 LED batten 4K mains
Length (mm)	671	1273
Weight (kg)	2.7	4.8
Light source	LED	
Luminaire luminous flux (lm)	2,100	4,100
Circuit power (W)	30	55
Luminaire efficacy (lm/W)	70	74
Power factor	>0.9	
Supply voltage	240V a.c. 50Hz	
Ballast type	Fixed output/Non-dimmable	
Operating temperature	0°C to 40°C	
IP rating	IP65	
Retaining clips	316 Stainless Steel	
Body construction	Moulded glass reinforced polyester (GRP)	
Diffuser	Clear reeded polycarbonate	
Gasket	Silicone	
Geartray	High reflective white powder coated mild steel	
Compliance	AS/NZS 60598	

Polar curve

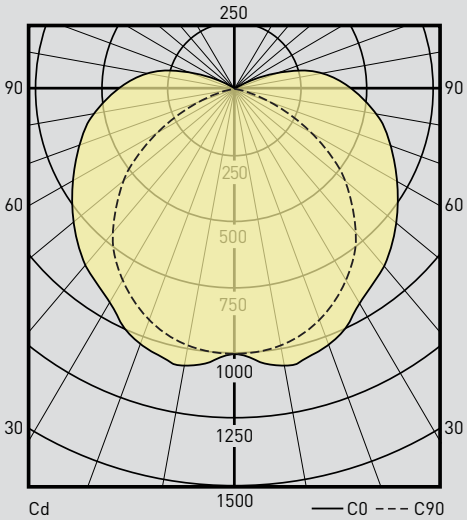

685070 - WP2L12 LED Batten 4K Mains
ULOR: 10%
DLOR: 90%

Single product

Cat no.	Dimensions L x W x H (mm)	Barcode
685040	690 x 350 x 350	9321001442196
685070	1295 x 350 x 240	9321001442202

WP2 weatherproof batten IP65 - T8

685010

685012

685014

Dimensions

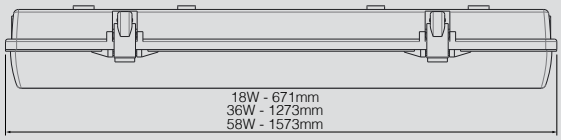

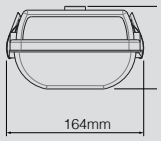

Technical characteristics - Mains

Variant	T8 600mm		T8 1200mm		T8 1500mm	
Cat no.	685010	685011	685012	685013	685014	685015
Lamp*	1 x 18W	2 x 18W	1 x 36W	2 x 36W	1 x 58W	2 x 58W
Light output rate (LOR)%	80	94	90	93	85	80
Ballast	Non-Dimmable Electronic T8 EEI = A2					
Line current (A) 240V 50Hz	0.08	0.16	0.15	0.29	0.24	0.45
Power factor	0.98	0.97	0.98	0.98	0.98	0.99
Circuit power (W)	18.2	36.0	35.0	69.8	54.0	106.8
Supply voltage	240V a.c. (± 6%) 50Hz					
Operating temperature	10ºC to 40ºC					
Charging current	HRC: 4450mA to 350mA, LRC110mA to 80mA					
Retaining clips	Stainless Steel 316 (18W 4-off, 36W 8-off, 58W 12-off)					
Body construction	Moulded glass reinforced polyester					
Gasket	Waterproof gasket in natural silicon gel					
Geartray	Polyester powder coated, mild steel universal geartray (made in Australia) LED upgradeable					
Diffuser	Reeded clear, injection moulded Polycarbonate - high transmittance					

* Lamp not supplied

Technical characteristics - Axiom

Cat no.	685023	685024	685025	685026	685027
Lamp	1 x 18W	2 x 18W	1 x 36W	2 x 36W	1 x 58W
Emergency classification C0/C90/C180	D40/C50	D25/C50/D50	D80/C80	D50/C80/D80	D125/D32
Battery pack	3 x D cells		5 x D cells		6 x D cells
Replacement battery pack	222023		222024		201559

Technical characteristics - Standalone

Cat no.	685016	685018	685019	685020	685021
Lamp	1 x 18W	2 x 18W	1 x 36W	2 x 36W	1 x 58W
Emergency classification C0/C90/C180	D40/C50	D25/C50/D50	D80/C80	D50/C80/D80	D125/D32
Battery pack	3 x D cells		5 x D cells		6 x D cells
Replacement battery pack	222023		201559		222026

WP2 weatherproof batten IP65 - T5

Dimensions

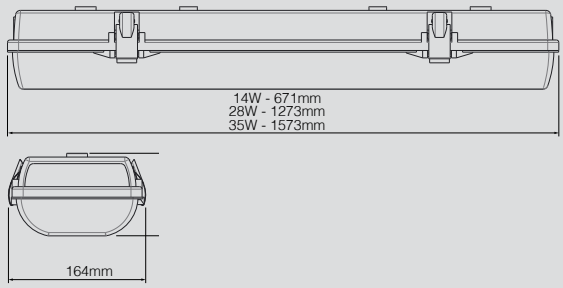

Technical characteristics - Mains

Variant	T5 600mm		T5 1200mm		T5 1500mm	
Cat no.	684929	684930	684931	684932	684933	684934
Lamp*	1 x 14W	2 x 14W	1 x 28W	2 x 28W	1 x 35W	2 x 35W
Light output rate (LOR)%	95.7	85.7	91.0	77.9	91.4	86.1
Ballast	Non-Dimmable Electronic T5 EEI = A2					
Line current (A) 240V 50Hz	0.08	0.15	0.14	0.28	0.17	0.35
Power factor	0.85	0.96	0.95	0.98	0.96	0.98
Circuit power (W)	16.5	32.0	31.0	61.0	39.0	76.5
Supply voltage	240V a.c. (± 6%) 50Hz					
Operating temperature	10ºC to 40ºC					
Retaining clips	Stainless Steel 316 (14W 4-off, 28W 8-off, 35W 12-off)					
Body construction	Moulded glass reinforced polyester					
Gasket	Waterproof gasket in natural silicon gel					
Geartray	Polyester powder coated, mild steel universal geartray (made in Australia) LED upgradeable					
Diffuser	Reeded clear, injection moulded Polycarbonate - high transmittance					

* Lamp not supplied

Technical characteristics - Axiom

Cat no.	684945	684946	684947	684948	684949	685000
Lamp	1 x 14W	2 x 14W	1 x 28W	2 x 28W	1 x 35W	2 x 35W
Emergency classification C0/C90/C180	D50/C50	D40/C50/D50	D80/C80	D63/C80/D80	D125/D32	D125/D32/D100
Battery pack	3 x D cells		5 x D cells		6 x D cells	
Replacement battery pack	222023		201559		222026	

Technical characteristics - Standalone

Cat no.	684937	684938	684939	684940	684941	684942
Lamp	1 x 14W	2 x 14W	1 x 28W	2 x 28W	1 x 35W	2 x 35W
Emergency classification C0/C90/C180	D50/C50	D40/C50/D50	D80/C80	D63/C80/D80	D125/D32	D125/D32/D100
Battery pack	3 x D cells		5 x D cells		6 x D cells	
Replacement battery pack	222023		201559		222026	

Motion sensors for 1 circuit - detection areas and load table

Detection areas

Cat No. 488TRI3W

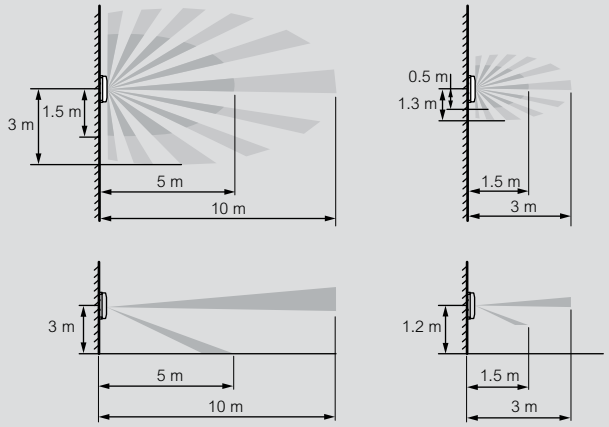

Cat No. 048941

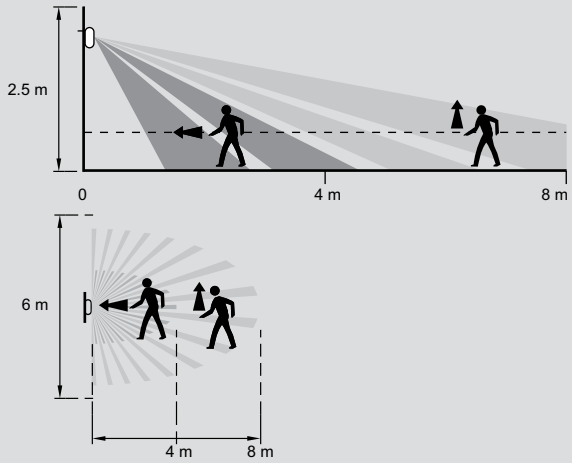

Cat No. 048941

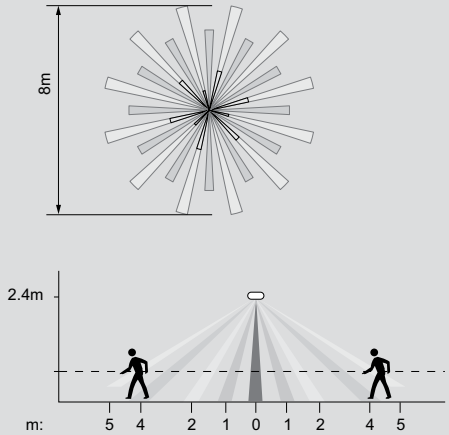

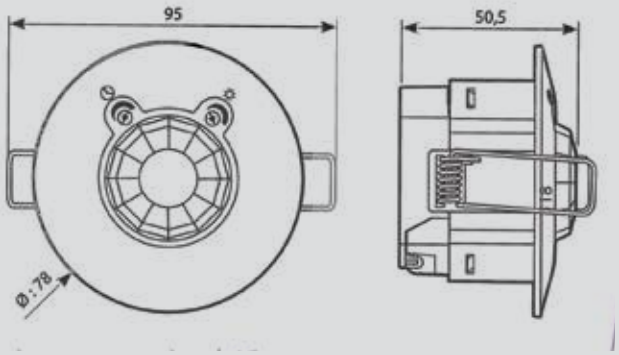

Load table

Cat No.	Halogen bulb	ELV halogen with ferromagnetic transformer	ELV halogen with electronic transformer	Fluorescent tube	Compact fluorescent bulb	LED
048942	-	1000VA	1000VA	10 x (2 x 36W)	250W	250W
048941	-	1000VA	1000VA	10 x (2 x 36W)	250W	250W
488TRI3W	2000W	2400VA	2400 VA	10 x (2 x 36W)	2400W	1200W

Sensors configuration tools & accessories - Weatherproof light sensitive switch

Customising settings on-site

All sensors are preset in the factory:
- 500 lux light level threshold for ceiling mounted sensors and 300 lux for surface mounting sensors
- 15 minutes time-delay and walkthrough function activated

The configuration tools are used to adjust the preset settings and the detection sensitivity

Installing surface mounting boxes Cat No. 48875

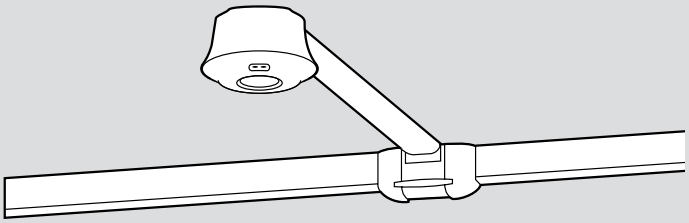

Installing fixing accessories in/on a corner Cat No. 48971 (view from above)

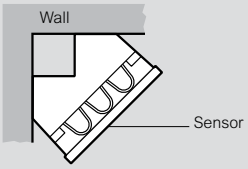

Mounting in internal corner

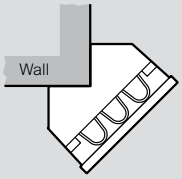

Mounting on external corner

Specifications - Programmable weatherproof light sensitive switch

Weatherproof rating	IP56
Maximum load	2400W Incandescent 2400W Halogen 1000VA Compact Fluorescent 1000W LED
Connection type	3 wire
Operation	Turns lights on at sunset and turns lights off at user-specified time*
Contacts	Normally open
Off time adjustment	From 9pm to 4am in increments of 30 minutes or dawn (natural light dependent)
Supply voltage	230 - 240V a.c. ± 6%
Minimum load	5W
Stand-by power consumption V_{in}	<1W
Operating temperature	0˚ to 50˚C
Unit size	83 W × 83 H × 56 D mm
Mounting	Surface mount Retrofitable to old PE170 base

PE170R2 vs common time-delay light sensitive switches

Programmable weatherproof light sensitive switch (PE170R2)

The innovative built-in algorithm enables a defined off time consistent all year round.

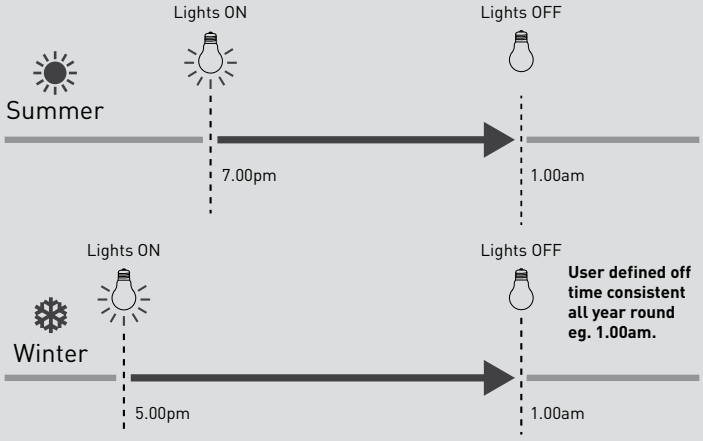

Common time delay light sensitive switches

As the sunset time changes with the seasons, the turn off time changes.

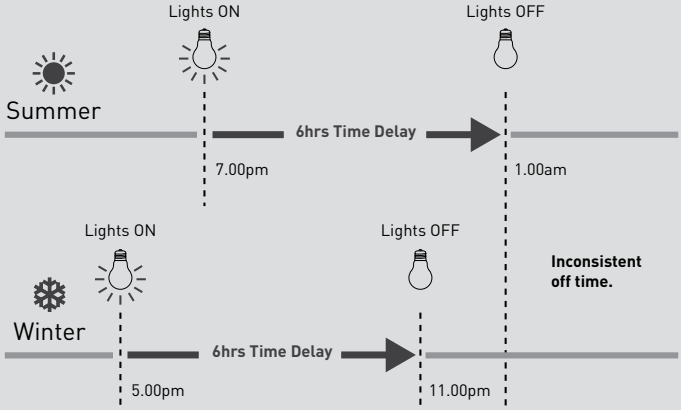

Motion sensors for 1 circuit

Load table

Cat No.	Halogen bulb	ELV halogen with ferromagnetic transformer	ELV halogen with electronic transformer	Fluorescent tube	Compact fluorescent bulb	LED	Fluorescent bulb with 1-10V ballast	DALI	Volt free motor contact
48804	2000W	1000VA	1000VA	10 x (2 x 36 W)	250W	250W	-	-	2A
48806	2000W	1000VA	1000VA	10 x (2 x 36 W)	250W	250W	-	-	-
48807	2000W	1000VA	1000VA	10 x (2 x 36 W)	250W	250W	-	-	-
48916	2000W	1000VA	1000VA	10 x (2 x 36 W)	250W	250VA	-	-	2A
48817	2000W	1000VA	1000VA	10 x (2 x 36 W)	250W	250W	-	-	-
48932	2000W	1000VA	1000VA	10 x (2 x 36 W)	250W	250VA	-	-	-
48933	2000W	1000VA	1000VA	10 x (2 x 36 W)	250W	250VA	-	-	-
078452	2000W	1000VA	1000VA	10 x (2 x 36 W)	250W	250VA	-	-	-

Sensor applications

Coverage patterns - lighting management sensor

Cat No.	Technology	Range	Detection area	Examples of applications
48804[1]		5 m	2.5 m; m: 2 0 2; Ø: 5 m	Individual office, corridor, stairways, restrooms etc.
48806		6 m (US) 5 m (PIR)	2.5 m; 1.2 m; m: 3 2.5 0 2.5 3; (US) (PIR) (PIR) (US); Ø US: 6 m; Ø PIR: 5 m	Classroom, meeting room, open plan office
48807		8 m	2.5 m; 1.2 m; m: 4 2.5 0 4; Ø: 8 m	Hall, stairways etc.
48916[1]		7 m (US) 12 m (PIR)	2.5 m; 0; 7 m (US); 12 m (PIR); ≈6 m (PIR/US); 7 m (US); 12 m (PIR)	Individual office, classroom, meeting room, restrooms etc.
078452		8 m	1.2 m; m: 4 5 6 8; ≈ 6 m; 3 m; 5 m	Individual office, classroom, meeting room, open plan office
48817		2 x 12 m	2.5 m; m: 12 0 12; Ø: 3m; 12 9 0 9 1	Long corridor
48932		Ø20 m	10 m; m: 10 5 0 5 10; Ø 20 m	High ceiling areas (Warehouses, gymnasium)
48933		18 m	20°; 2.5 m; m: 3 0 5 10 15; 10 m; 3 m 0 5 m 10 m 15 m	High ceiling areas (Warehouses, gymnasium) outdoor car park, cellar, laboratory

Passive Infrared (PIR) technology

Dual technology (DT)

[1] 1 lighting output & 1 fan output

Commercial LED Lighting Solutions

Energy savings for all applications

Vortex LED Highbay

Ideal for warehouses, factories, storage facilities and shopping centres

Bulkhead 265 and 360 LED

Ideal for general security applications, schools, stairwells and exteriors

WP2 LED weatherproof battens

Ideal for carparks, industrial sites and stairwells

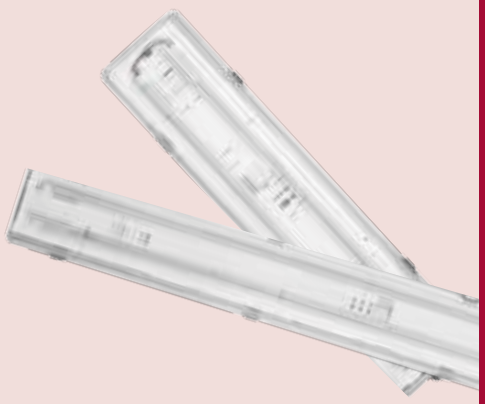

Legrand Terms and Conditions of Sale

1 Definitions and interpretation

1.1 In these terms and conditions:
Agreement means the agreement between Legrand and the Purchaser comprising these terms and conditions and any other document which Legrand provides to the Purchaser and which is expressed to include or be subject to these terms and conditions.
Australian Consumer Law means Schedule 2 to the Competition and Consumer Act 2010 (Cth).
Consumer means a "consumer'' as that term is defined in section 3 of the Australian Consumer Law.
Consumer Contract means a contract for the supply of goods or services to a Consumer.
Legrand means Legrand Australia Ply Limited (ABN 31000102 661) and, unless otherwise stated or the context otherwise makes clear, includes its Related Bodies Corporate.
Order has the meaning given in clause 3.1.
Order Confirmation has the meaning given in clause 3.1.
Products means all goods offered to or supplied to the Purchaser by Legrand (including all products sold under the HPM, Legrand, Bticino, Cablofil and Nelson brands and trade marks).
Purchaser means any person or entity to whom Legrand supplies or offers to supply Products.
Related Bodies Corporate has the same meaning as in section 50 of the Corporations Act 2001 (Cth).
Standard means an applicable standard or specification for a particular Product which is published by Legrand or mandatory under applicable laws or both.
Taxes has the meaning given in clause 4.2(b).
Warranty Information Sheet means the document which forms part of these terms and conditions and which contains information Legrand provides to Purchasers who are also Consumers under applicable provisions of the Australian Consumer Law.

2 Application of terms and conditions

2.1 These terms and conditions apply to all quotations, offers and purchase orders made or accepted by Legrand and to all Products sold or otherwise supplied by Legrand to a Purchaser.
2.2 So far as applicable, these terms and conditions also apply to the provision of any services accompanying the supply of, or provided in relation to, Products and, where the context allows, any reference to the sale or supply of Products includes the provision of such services.
2.3 These terms and conditions may not be varied or cancelled unless agreed in writing by Legrand.
2.4 Other than these terms and conditions, any conditions or other terms which are set out in any offer, purchase order or other document submitted by or on behalf of the Purchaser are expressly excluded.

3 Orders

3.1 Each Purchaser's order must be in writing (Order) and will be binding on Legrand only if Legrand gives written acknowledgement of its acceptance on these terms and conditions (Order Confirmation).
3.2 Despite clause 3.1, if Products are supplied by Legrand without an Order Confirmation, Legrand's conduct in accepting and fulfilling an Order will be deemed to constitute the Order Confirmation and Legrand's invoice will constitute evidence of the Order Confirmation.

4 Prices and payment

4.1 The prices of the Products are those set out in Legrand's then-current applicable price list at the date of their dispatch, unless otherwise specified in the Order Confirmation. Legrand also reserves the right to change prices for its Products and any applicable price list without notice to the Purchaser.
4.2 Unless otherwise specified, all prices are:
(a) inclusive of delivery costs to the Purchaser's nominated store or other delivery point in Australia; and
(b) exclusive of all taxes, including goods and services tax (GST), sales, consumption and value added taxes, duties, excises, imposts and levies relating to the supply or use of the Products (Taxes).
4.3 Unless otherwise agreed or specified by Legrand, payment is due in full within 30 days of the end of the month of the date of the invoice.
4.4 Legrand may at its discretion charge a minimum order fee of $25.00 for any orders below $150.00.
4.5 Legrand may refuse, extend or withdraw credit to the Purchaser at any time and on such terms as it considers appropriate, in each case at its absolute discretion.
4.6 The Purchaser will pay all amounts due under these terms and conditions to Legrand by direct transfer to Legrand's nominated bank account or in any other manner specified by Legrand from time to time.
4.7 Legrand may charge interest up to a rate which is 2% higher than that applied to commercial overdraft balances of over $100,000 by Legrand's principal bank, such rate to be compounded and calculated daily on the amount outstanding (including Taxes) after expiry of the due date for payment until it has been paid in full.
4.8 If payment is not made in accordance with clause 4.3, 4.4 or 4.6, or if at any time the credit standing of the Purchaser, in the opinion of Legrand, is at risk or has been impaired Legrand may suspend or cancel an Order or delivery of any Products until alternative arrangements as to payment or credit in terms satisfactory to Legrand have been agreed.
4.9 Despite any other provision of this clause 4, the Purchaser must pay or reimburse Legrand all Taxes. Without limiting that obligation, if GST is payable on any supply made by Legrand under these terms and conditions, the Purchaser must pay Legrand an additional amount equivalent to the GST at the time the relevant payment to Legrand is due. Legrand will provide the Purchaser with a tax invoice.
4.10 The Purchaser may not withhold or set off any payment or make deductions from any amount owing to Legrand without Legrand's prior written consent.

5 Cancellation and variation of Orders

5.1 Notices of cancellation or variation of Orders submitted by the Purchaser must be in writing and may be accepted or rejected by Legrand at its discretion.
5.2 If a Purchaser gives a notice under clause 5.1, without prejudice to its other rights, Legrand reserves the right to charge for all work it has performed and will need to perform in fulfilling an Order or, if the work is substantially complete or the Products were made to order or are otherwise not immediately available for sale to another customer at an equivalent price, to charge for the full amount set out in the applicable Order Confirmation in addition to any other costs it incurs on the Purchaser's behalf.

6 Delivery and return

6.1 Legrand will deliver the Products to the Purchaser by means of Legrand's preferred carriers. If the Purchaser wishes the Products to be delivered by another carrier, that delivery will be at the Purchaser's cost and risk.
6.2 Unless Legrand otherwise agrees, and subject to any additional charges incurred in delivery and transport, delivery of Products will be made to the delivery point in Australia specified in the applicable Order.
6.3 Stated delivery times are no more than an estimate by Legrand and will not be binding upon Legrand. Legrand is not liable for any costs or other loss caused by reason of any delay in delivery.
6.4 If the quantity of Products delivered does not correspond with the quantity stated in an Order the Purchaser will only be liable to pay for the quantity delivered in the case of short-delivery and for the contract price in the case of over-delivery (subject in the latter case to permitting Legrand to collect the surplus Products) provided that in no event will such short or over-delivery entitle the Purchaser to damages or give the Purchaser a right to rescind the Agreement.
6.5 Any surplus Products delivered to the Purchaser will remain the property of Legrand and the Purchaser will take all necessary precautions for the safe custody and protection of such surplus Products until the time of their collection by Legrand.
6.6 If the Purchaser refuses or fails to take delivery of Products Legrand may, at its discretion and without prejudice to any of its other rights, store those Products at the Purchaser's risk and expense.
6.7 Except as specified in clause 6.5 Products may only be returned to Legrand with its prior written consent and subject to the following:
(a) all returned Products must be delivered to Legrand at the Purchaser's cost within 21 days of their receipt by the Purchaser in good order and condition, unused and in their original packaging together with a despatch note stating the original Order and invoice numbers and the date of purchase;
(b) Legrand may at its discretion charge the Purchaser a restocking fee of up to 20% of the original net invoice price of any Products returned to it pursuant to this clause 6. 7; and
(c) Legrand will generally not accept for return Products which have been manufactured to order unless those Products do not conform to an applicable Standard, are otherwise proven to Legrand's satisfaction to be defective or are supplied under a Consumer Contract and the provisions of clause 10 apply.

7 Passing of risk and title

7.1 Risk in the Products will pass to the Purchaser when the Products are tendered for delivery at the delivery point specified in an Order or when the Products are collected by the Purchaser for loading into the vehicle of the Purchaser, its carrier or other agent.
7.2 Legal and beneficial title (ownership) in the Products will remain with Legrand until:
(a) all amounts in respect of the Products under an applicable Order; and
(b) any other amounts the Purchaser may owe Legrand, whether under these terms and conditions, under any other agreement or pursuant to any other Order, have been paid in full.
7.3 Until such time as ownership in the Products passes to the Purchaser, the Purchaser will:
(a) store the Products in a manner which makes them readily identifiable as the property of Legrand;
(b) hold the Products as bailee of Legrand;
(c) keep, and provide Legrand at any time on reasonable request, proper and complete stock records covering the receipt, identification, storage, location, sale and movement of the Products; and
(d) keep the Products insured against theft, damage and destruction.
7.4 Despite clauses 7.2 and 7.3 the Purchaser is entitled, until notified by Legrand or until the happening of any of the events set out in clause 7.7, to sell the Products in the normal course of its business, in which case the proceeds of resale must be held in trust for Legrand in a separate account.
7.5 Legrand is entitled, at any time while any debt remains outstanding by the Purchaser beyond its due date of payment in respect of the amounts referred to in clause 7.2(a) and clause 7.2{b), to notify the Purchaser of its intention to take possession of the Products and for this purpose to enter upon the land and buildings of the Purchaser with all necessary equipment to take possession of the Products.
7.6 On receipt of notice from Legrand or on the happening of any of the events set out in clause 7.7, the Purchaser's authority to sell or otherwise deal with the Products as set out in clause 7.4 is withdrawn.

7.7 The Purchaser will give immediate notice to Legrand of:
(a) any notice to the Purchaser that a receiver or manager is to be or has been appointed over its assets or any part of its business or undertakings;
(b) any notice to the Purchaser that a petition to wind up the Purchaser is to be or has been presented or any notice of a resolution to wind up the Purchaser;
(c) a decision by the Purchaser that it intends to make any arrangements with its creditors; or
(d) any act of bankruptcy by the Purchaser as defined in section 40 of the Bankruptcy Act 1966 (Cth).

8 Personal Property Securities Act 2009 (Cth) (PPSA)

8.1 The Purchaser acknowledges and agrees that:
(a) by agreeing to these terms and conditions (in particular, by virtue of clause 7) the Purchaser grants a security interest pursuant to the PPSA to Legrand in any Products supplied by Legrand to the Purchaser and any proceeds of the sale of such Products;
(b) Legrand may register on the Personal Property Securities Register ("PPS Register'') a security interest or purchase money security interest ("PMSI") in the Products; and
(c) Legrand may, on demand, obtain reimbursement from the Purchaser for all costs and expenses incurred by Legrand in relation to registering, maintaining or releasing any financing statement or financing change statement (each as defined in the PPSA) in respect of any security interest or PMSI under these terms and conditions.
8.2 The Purchaser undertakes:
(a) promptly to do all things, sign any further documents and provide any further information (which information the Purchaser warrants to be complete, accurate and up-to-date in all respects) which Legrand may reasonably require to enable it to perfect, and maintain the perfection of, its security interest or PMSI (including by registration of a financing statement or financing change statement on the PPS Register);
(b) not to register a financing statement or financing change statement in respect of the Products without Legrand's prior written consent; and
(c) to give Legrand no less than 14 days' prior written notice of any proposed change in the Purchaser's name or any other change in the Purchaser's details (including, but not limited to, changes in its address, facsimile number or trading name).
8.3 The Purchaser waives its right under section 157 of the PPSA to receive notice of any verification of any registration pursuant to the PPSA.
8.4 The Purchaser agrees that pursuant to section 115(1) of the PPSA and to the maximum extent permitted by law the Purchaser waives its rights under, and with Legrand's agreement contracts out of, sections 95,118, 121(4), 125, 129(2) and (3),130,132(3)(d),132(4), 135,142 and 143 of the PPSA.

9 Warranty for defective Products

9.1 Legrand undertakes that if Products are found upon inspection by or on behalf of Legrand not to conform to a Standard or are otherwise defective in materials or workmanship, Legrand will, at its option:
(a) replace or repair the Products;
(b) bring the Products into conformity with the Standard;
(c) take back the Products found not to conform to the Standard or which are otherwise defective and refund the appropriate part of the purchase price; or
(d) pay for the cost of replacement or repair of the Products.
provided that:
(e) the liability of Legrand will never exceed the purchase price of the Products; and
(f) the Purchaser has performed all its contractual obligations.
9.2 If any Products are damaged during transportation or delivery by Legrand's carrier or do not comply with the description on the relevant Order, Legrand will accept return of those Products and will credit the Purchaser with any amount which it has paid for them.
9.3 Clauses 9.1 and 9.2 apply only if:
(a) any alleged defect or damage to the Products occurred within 12 months of the date of their installation or 18 months from the date of their purchase from Legrand, whichever is the earlier;
(b) the Products have been properly handled, stored and maintained and any instructions by Legrand in relation to the Products and their installation and use (including operating instructions which specify applicable operating and environmental conditions for particular Products) have been fully observed;
(c) the Purchaser gives written notice to Legrand of the alleged defect in respect of the Products, such notice to be received by Legrand within 14 days of the date when such defect appeared or ought to have been discovered;
(d) the Products, being Products of the kind referred to in clause 9.2, are unsoiled and returned unopened to Legrand accompanied by an itemised list including the batch number and the relevant statement date and number;
(e) the Purchaser gives Legrand a reasonable opportunity to inspect the Products; and
(f) the Purchaser makes no further use of the Products after the Purchaser discovers or ought to have discovered that they were defective.
9.4 Clause 9.1 does not apply:
(a) to the extent the Products are damaged after risk passes to the Purchaser in accordance with clause 7.1;
(b) to the extent the Products have been subjected to abnormal use (including excessive vibration, short circuiting, excessive voltage, interrupted or uneven power supply and negligent operation);
(c) to the extent any Products have been repaired, altered or replaced by anyone other than Legrand or its authorised representatives;
(d) to the extent defects or damage to any Products are attributable to their installation or assembly by any third party;
(e) to defects or damage arising from normal wear and tear; and
(f) to any components of the Products which are not manufactured or supplied by Legrand or any one of its Related Bodies Corporate.
9.5 Certain Products manufactured and supplied by Legrand (including lamps) are specified to have a nominal life or rating. Legrand does not warrant and will not in any circumstance be liable for defects or failures in any such Products or for any reduction in any such Products' nominal life or rating attributable to external factors such as vibration, interrupted or uneven power supply or excessive voltage.
9.6 The warranty contained in this clause 9 is personal to the Purchaser and may not be assigned except with the prior written consent of Legrand. In particular, it is hereby stated and acknowledged by the Purchaser that the warranty contained in this clause 9 confers no rights and is not intended to benefit endusers of Products who are Consumers.
9.7 Legrand reserves the right to provide express warranties direct to endusers of Products. Such warranties may vary or extend the term of available warranty protection and may also be subject to different conditions than are set out in this clause 9.

10 Exclusion of liability

10.1 Legrand acknowledges that certain legislation in Australia, including the Australian Consumer Law, provides Consumers with guarantees and rights which cannot be excluded, restricted or modified or which may in certain cases only be modified or restricted to a limited extent. Nothing in these terms and conditions excludes, restricts or modifies, or is intended to exclude, restrict or modify, any guarantee, condition, warranty, right or liability implied by law (including any guarantee, condition, right or liability imposed under the Australian Consumer Law) which cannot lawfully be excluded, restricted or modified.
10.2 To the extent permitted by the Australian Consumer Law, Legrand's liability for goods or services supplied under a Consumer Contract that are not of a kind ordinarily acquired for personal, domestic or household use or consumption is limited, at Legrand's option, to any one or more of the following:
(a) in the case of goods, the replacement, repair or payment of the cost of replacement or repair of the goods; and
(b) in the case of services, supplying the services again or payment of the cost of having the services supplied again.
10.3 In the case of goods or services which are not supplied by Legrand under a Consumer Contract:
(a) Legrand accepts no liability for any economic, indirect or consequential loss, including loss of profit, loss of income, loss of contracts or business and loss of data; and
(b) Legrand's maximum aggregate liability for any cause and under any head of liability will not in any circumstances exceed the total price paid by the Purchaser for those goods and services.
10.4 These terms and conditions describe the full extent of Legrand's obligations and liabilities in respect of the supply of the Products and, except as expressly stated or referred to in this Agreement or as otherwise specifically provided in writing by Legrand, there are no guarantees, conditions, warranties or other terms that bind Legrand nor will Legrand otherwise be liable in contract, tort (including negligence) or for breach of statutory duty for any loss, damage, cost or expense of any kind.

11 Product specification and discontinuance

Legrand reserves the right to:
(a) discontinue Products;
(b) substitute comparable products; and
(c) modify the design, specifications and Standards (other than mandatory Standards) applicable to any of its Products,
at any time including during the currency of these terms and conditions and any current Order and, in each case, without incurring any liability or other obligation to the Purchaser.

12 Termination

12.1 Legrand may terminate the Agreement, or suspend or cancel any current Order, by written notice to the Purchaser if the Purchaser does not pay any amount in accordance with these terms and conditions.
12.2 Either party may terminate this Agreement, or suspend or cancel any current Order, by written notice to the other if:
(a) the other party commits or allows to be committed a material breach of these terms and conditions and does not within 21 days of receiving a written notice from the first mentioned party rectify that breach;
(b) the other party commits a material breach of these terms and conditions which cannot be remedied;
(c) the other party becomes, or resolves to become, subject to external administration or proceedings under Chapter 5 of the Corporations Act 2001 (Cth); or
(d) an event of the kind described in clause 7. 7 occurs in respect of the other party.
12.3 Upon the expiration or termination of this Agreement or the suspension or cancellation of any Order for any reason, the Purchaser must promptly pay all amounts owing to Legrand under this Agreement.

13 Force majeure

Neither party will be liable for any loss or damage caused by delay in the performance or non-performance of any of its obligations occasioned by any cause whatsoever that is beyond its reasonable control including: Act of God; war; civil disturbance; requisitioning by governments or public authorities; governmental restrictions; prohibitions or enactments of any kind; import or export regulations; strikes; shipping and transport delays; lock-outs or other industrial disputes (whether involving its own employees or those of any other person); difficulties in obtaining materials; breakdown of machinery; fires; or accidents. If any such event occurs the affected party may to the extent necessary vary or suspend any Order, these terms and conditions or the

Agreement, in each case at its discretion and without incurring any liability to the other party for any such loss or damage.

14 Intellectual property

14.1 Legrand for and on behalf of itself, its Related Bodies Corporate and its licensees (if any) reserves ownership and intellectual property rights in all inventions , names, illustrations, drawings , plans, specifications , formulas and documents relating to the Products. Nothing in these terms and conditions operates or is intended to deny Legrand, its Related Bodies Corporate or its licensees, or confer on the Purchaser, such rights or any other intellectual property rights in the Products.

14.2 If a third party asserts a claim for breach of its intellectual property rights arising from the supply or use of the Products the Purchaser will immediately inform Legrand and Legrand will be solely responsible for the defence, resolution and settlement of any such claim. The Purchaser will at Legrand's cost and request render such reasonable assistance as Legrand requires in defending any such claim. In no circumstances will the Purchaser acknowledge or concede the validity of any such claim except with Legrand's express written consent. If any such claim against Legrand succeeds, Legrand will at its option use its best endeavours to obtain a right to use or license any such intellectual property rights or modify the Products or replace them at its cost.

14.3 The Purchaser will indemnify Legrand for and in respect of claims by any third party in relation to the Products which arise from or can be attributed to the special processes , requirements or specifications of the Purchaser, including the use or transfer of designs, logos, trade marks and techniques, equipment and tools in the manufacture, production and labelling of the Products.

14.4 In this clause 14 a reference to intellectual property rights includes patents, trade marks, copyright, registered designs and licences and applications in respect of any of the above.

15 Assignment

This Agreement is personal to Legrand and the Purchaser and any rights and obligations under this Agreement may only be assigned by the Purchaser with the prior written consent of Legrand.

16 Waiver

No neglect, delay or indulgence on the part of Legrand in enforcing these terms and conditions will prejudice the rights of Legrand or be construed as a waiver of any such rights.

17 Severability

If any part of these terms and conditions (including any provision , part, paragraph , phrase or word) is illegal, invalid or unenforceable it will be read down so far as necessary to give it a valid and enforceable operation or, if that is not possible, it will be severed from these terms and conditions , but in any event the remaining provisions will remain in full force and effect.

18 Governing law

This Agreement and these terms and conditions are governed by and must be construed in accordance with the laws which apply in the State of New South Wales. The parties submit to the non-exclusive jurisdiction of the courts of that State and the Commonwealth of Australia in respect of all matters or things arising out of these terms and conditions and any other provision of this Agreement.

19 Privacy policy

Legrand's Privacy Policy and Credit Reporting Policy is on our website at legrand.com.au. The Purchaser and its directors, partners or proprietors:

(a) consent to the collection, use and disclosure of the personal information and credit information for the purpose of Legrand supplying the Products and managing the Purchaser's account, assessing the credit worthiness of the Purchaser, registering Legrand's security interests on the PPSR and otherwise implementing these terms and conditions and for any other purpose described in the Privacy Policy and Credit Reporting Policy, and warrant that all data provided by the Purchaser is accurate; and

(b) consent to any personal information collected by Legrand being disclosed to third parties operating outside Australia including New Zealand, France, and other European countries, United States of America, and any other country where Legrand or its related entities have a presence or engage third parties, acknowledge and agree that Australian Privacy Principle 8.1 will not apply to such disclosures, that Legrand will not be required to take such steps as are reasonable in the circumstances to ensure such third parties outside of Australia comply with the Australian Privacy Principles and will not be accountable under the Privacy Act (Cth) and the individual will not be able to seek redress against Legrand under the Privacy Act (Cth) in the event such overseas third parties do not comply.

20 Exports and Embargoes

20.1 This section applies where the Purchaser undertakes export, re-export or resale of the Products or where our commercial arrangement is not restricted solely to the Australian market (Exports).

The Purchaser warrants and undertakes to Legrand:

(a) The Purchaser shall comply with all the (re-) export control regulations of Australia, France, the EU and the USA and those of any other applicable jurisdiction and it shall obtain all necessary licences, shipping documents and authorisations required under such legislation in respect of such Exports.

(b) The Purchaser shall not export or re-export the Products to a country that is subject to embargo or sanction without having obtained all necessary authorisations from Australian, French, European or American authorities, the United Nations or any other country or organisation that imposes such restrictions.

(c) The Purchaser shall not supply the Products to parties, organisations or entities subject to embargoes, sanctions or other restrictions imposed by Australia, France, the EU, the USA, the United Nations or by any other country, or to parties, organisations or entities if there is reason to believe that they fail to fully comply with all applicable national or international regulations, sanctions and embargoes.

(d) The Products are not intended to be used in connect ion with any sectors or use that is banned or subject to restrictions under any laws or regulations, unless all required authorisation by the relevant bodies have been obtained.

(e) All transfer and receipt of funds by the Purchaser comply with all national and international regulations.

(f) To enable authorities or Legrand to conduct compliance audits, the Purchaser upon request by Legrand, shall promptly provide Legrand with all relevant licences and authorisations, information as to the identity of the customer to whom the Products are supplied, the destination and intended use of the Products and the financial institutions or entities used to collect and issue payments.

(g) The Purchaser shall notify Legrand if the Purchaser suspects that any person the Purchaser has supplied the Products to may not be complying with any embargo, sanction or export control regulation.

(h) Purchaser shall indemnify and hold harmless Legrand from and against any and all claims, proceedings, actions, fines, losses, costs and damages arising out of or relating to any noncompliance by the Purchaser with any of the above undertakings or breach of any relevant export control regulations or sanction or embargo.

20.2 The Purchaser's compliance with all the above undertak ings is a condition of Legrand continuing to supply the Products to the Purchaser and Legrand has the right to suspend such supply and terminate any agreement where we have a reasonable belief that the above undertakings are not being complied with or if any obligation under any agreement would constitute a breach of any national or international regulations or any embargo or sanction and Legrand shall have no liability to the Purchaser or any third party by way of damages or otherwise in respect of such suspension or termination.

Terms and conditions are subject to change without notice.
Please visit our website for up to date terms and conditions.

Index of protection

1. Protection against solid bodies and liquids: IP index of protection

Degrees of protection for enclosures of electrical equipment according to standards: IEC 60529, BS EN 60529 and NF EN 60529

1st digit: protection against solid bodies			Additional letter IP XX (ABCD): protection against direct contact resulting from the access to hazardous current-carrying parts		
IP	tests		IP	tests	protection
0		No protection	A	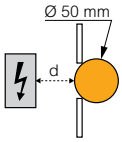	The back of the hand remains remote from dangerous parts
1		Protected against solid bodies larger than 50 mm			
2	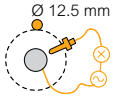	Protected against solid bodies larger than 12.5 mm	B	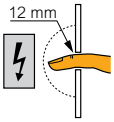	The dangerous parts can not be touched when introducing a finger
3	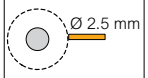	Protected against solid bodies larger than 2.5 mm	C	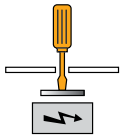	The dangerous parts can not be touched when introducing a tool (eg a screwdriver)
4		Protected against solid bodies larger than 1 mm	D		The dangerous parts can not be touched when introducing a wire
5	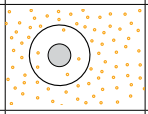	Protected against dust (no harmful deposit)			
6	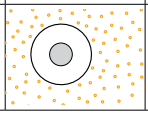	Completely protected against dust			

2nd digit: protection against liquids		
IP	tests	
0		No protection
1		Protected against vertically-falling drops of water (condensation)
2		Protected against drops of water falling at up to 15° from the vertical
3	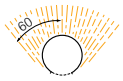	Protected against drops of rain water at up to 60° from the vertical
4	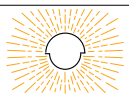	Protected against projections of water from all directions
5	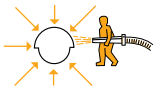	Protected against jets of water from all directions
6	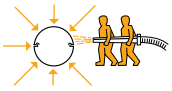	Protected against jets of water of similar force to heavy seas
7	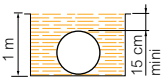	Protected against the effects of immersion
8	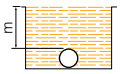	Protected against prolonged effects of immersion under pressure
9	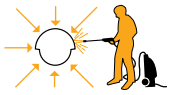	Protected against high pressure and temperature water jets

2. Protection against mechanical impact: IK index of protection

According to standards: IEC 62262, BS EN 62262 and NF EN 62262

IK	Tests	Impact energy (in Joules)
IK 00		0
IK 01	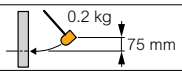	0.15
IK 02	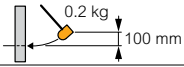	0.2
IK 03	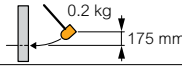	0.35
IK 04	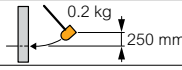	0.5
IK 05	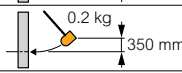	0.7
IK 06	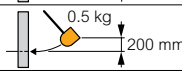	1
IK 07	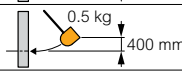	2
IK 08	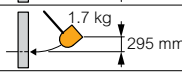	5
IK 09	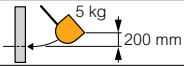	10
IK 10	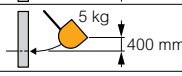	20

• This table can be used to ascertain the resistance of a product to an impact given in Joules from the IK code (graduated from 00 to 10)

LEGRAND

The product partner you can

TRUST

Whether you are buying, installing or using Legrand products you can be assured they comply to all the required Australian standards of manufacturing quality and electrical safety.

Legrand NSW head office, located in Prestons features:

- local manufacturing of over 15,000 products
- a dedicated team and two accredited NATA laboratories to conduct compliance tests
- over 20 R&D engineers dedicated to the development of new products

All Legrand compliance certifications and approvals are available on either the Electrical Regulatory Authorities Council certification database "erac.gov.au/public" or the NSW office of Fair Trading database "eapr.fairtrading.nsw.gov.au/default.aspx".

Legrand Australia
Building 4, Nexus Industry Park
43-47 Lyn Pde, Prestons NSW 2170
Tel: 1300 369 777
www.legrand.com.au

Customer service enquiries
1300 369 777